IOWA COMMUNICATIONS NETWORK

HENRY COUNTY HEALTH CLINIC TO E. CLEVELAND ST / E. ADAMS ST
FIBER INSTALLATION
HENRY COUNTY, NEW LONDON, IOWA
111 W. WASHINGTON ST TO E. CLEVELAND ST / E. ADAMS ST

UTILITY INFRASTRUCTURE SOLUTIONS
hbk ENGINEERING
509 SOUTH GILBERT STREET
IOWA CITY, IA 52240
PHONE: (319) 338-7557
STATE OF IOWA, DEPARTMENT OF LABOR
REGULATION NO. 00527328

PROJECT INFORMATION

SCOPE OF WORK:

THE ICN INTENDS TO INSTALL A 12-STRAND ARMORED CABLE CONNECTION FROM THE HENRY COUNTY HEALTH CLINIC DATA ROOM, 111 W. WASHINGTON ST, NEW LONDON, IA, TO THE EXISTING ICN HANDHOLE AT THE INTERSECTION OF E. CLEVELAND ST AND E. ADAMS ST, NEW LONDON, IA. THIS WILL REQUIRE CONDUIT OF APPROXIMATELY 3,008 FEET AND A TOTAL CABLE FOOTAGE OF APPROXIMATELY 3,408 FEET.

CONTACT PERSON:
TIM FLICKINGER
IOWA COMMUNICATIONS NETWORK (ICN)
PHONE: (515) 725-4699
timothy.flickinger@icn.state.ia.us

SANDRA SMITH
HBK ENGINEERING
509 S. GILBERT STREET
IOWA CITY, IA 52240
PHONE: (815) 207-1726
ssmith@hbkengineering.com

JAMIE WAGENBOCK
HENRY COUNTY HEALTH CLINIC
PHONE: (319) 385-5407
wagenbachj@hchc.org

LOCATION MAP

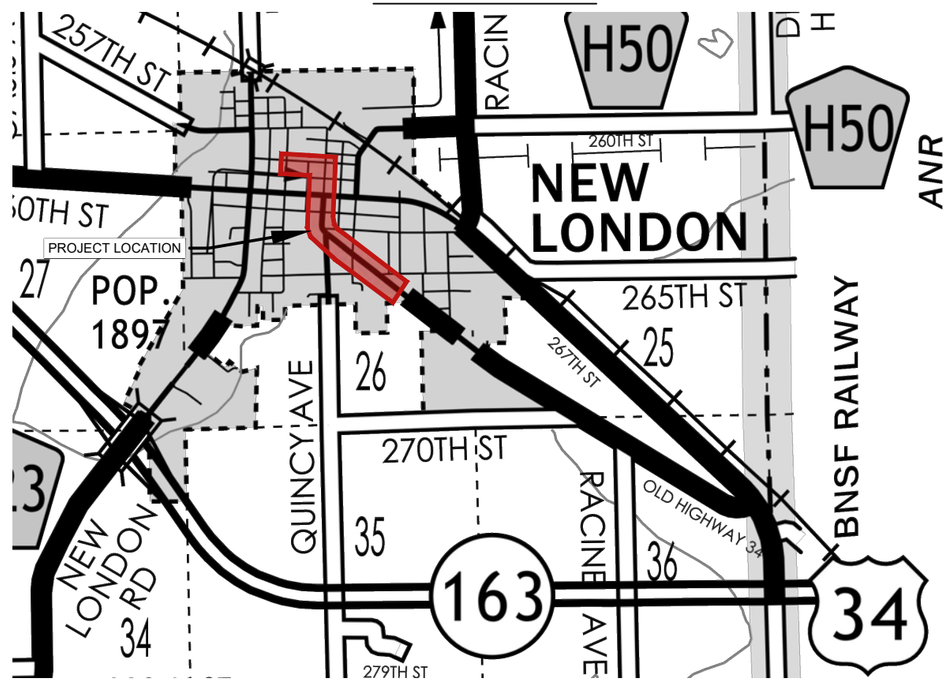

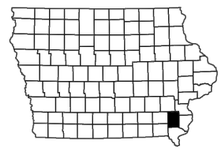

INDEX OF SHEETS

SHEET	TITLE
1	TITLE SHEET
2	ENGINEER GENERAL NOTES AND LEGEND
3	ICN GENERAL NOTES
4	MATERIALS
5	OVERALL SHEETS LAYOUT
6	HCHC INTERIOR ROUTE
	CIVIL
7-10	PLAN SHEETS
11-23	DETAIL SHEETS

UTILITY CONTACTS

COMPANY	CONTACT NAME	PHONE	PHONE
ALLIANT ENERGY (ASE)	ALLIANT ENERGY FIELD ENGINEER	(800) 255-4268	LOCATE_IPL@ALLIANTENERGY.COM
IOWA COMMUNICATIONS NETWORK (ICN)	SHANNON MARLOW	(800) 572-3940	ICNOUTSIDEPLANTIOWAONECALL@IOWA.GOV
IOWA DEPARTMENT OF TRANSPORTATION	BOB YOUNIE	(515) 239-1589	BOB.YOUNIE@IOWADOT.US
NEW LONDON MUNICIPAL UTILITIES (NLM)	KASI HOWARD	(319) 367-7702	NEWLONCITY@IOWATELECOM.NET
MEDIACOM (TC9)	DARRIN WALKER	(319) 759-3786	DWALKER@MEDIACOMCC.COM
WINDSTREAM (WINIA)	LOCATE DESK	(800) 289-1901	LOCATE.DESK@WINDSTREAM.COM

*THIS CONTACT LIST IS NOT ALL-INCLUSIVE. CONTRACTOR IS RESPONSIBLE FOR REQUESTING LOCATES OF ALL UTILITIES.

NOTE:
CALL 811 FOR LOCATION OF UNDERGROUND TELEPHONE, ELECTRIC, GAS MAINS, CABLE TELEVISION AND OTHER UTILITIES.

EXISTING UNDERGROUND AND OVERHEAD UTILITIES AND DRAINAGE STRUCTURES HAVE BEEN PLOTTED FROM AVAILABLE INFORMATION AND THEREFORE, THEIR LOCATIONS MUST BE CONSIDERED APPROXIMATE ONLY. IT IS THE RESPONSIBILITY OF THE INDIVIDUAL CONTRACTORS TO EXACTLY LOCATE AND PROTECT EACH EXISTING UTILITY BEFORE AND DURING ACTUAL CONSTRUCTION.

IOWA ONE CALL
1-800-292-8989
www.iowaonecall.com

HENRY COUNTY HEALTH CLINIC
NEW LONDON, IOWA

1	90% PLAN SUBMITTAL	3/23/2022
2	95% PLAN SUBMITTAL	3/28/2022
3	PERMIT PLAN SUBMITTAL	3/30/2022
4	FINAL PERMIT PLAN SUBMITTAL	4/5/2022

IOWA COMMUNICATIONS NETWORK
400 EAST 14TH STREET
GRIMES STATE OFFICE BUILDING
DES MOINES, IOWA 50319
ICN © 2021, COPY WITH PERMISSION

ENGINEER GENERAL NOTES AND LEGEND

ALL CONDUIT AND HANDHOLE INSTALLATIONS, REMOVALS, MODIFICATIONS, AND TEMPORARY WORK SHALL BE DONE ACCORDING TO THE FOLLOWING NON-INCLUSIVE CONDITIONS:

SECTION 1.0 SCOPE OF WORK

1.01 INSTALLATION DESCRIPTION:

INSTALL CONDUIT AND ALL RELATED APPURTENANCES FOR FIBER OPTIC CABLE INSTALLATION. SEE PLANS FOR EXACT LOCATION, LENGTHS, QUANTITIES, AND DIMENSIONS OF PROPOSE IMPROVEMENTS.

1.02 SEE SHEET 3 FOR LOCATION OF ENGINEER'S ESTIMATE OF MATERIALS.

1.03 THE CONTRACTOR SHALL PROVIDE ALL MATERIAL, EQUIPMENT, LABOR, INSTALLATION, RESTORATION,UTILITY RELOCATION CHARGES, JOB SITE DELIVERY COSTS AND INCIDENTALS TO COMPLETE THE DESCRIBED OR ILLUSTRATED WORK, UNDER THIS CONTRACT.

1.04 ANY CHANGE-ORDER REQUEST MUST BE PRESENTED IN WRITING TO THE OWNER'S REPRESENTATIVE AND APPROVED PRIOR TO PROCEEDING WITH THE REQUESTED CHANGE. DOCUMENTATION CONCERNING ANY AND ALL CHANGE ORDERS WILL BE REDUCED TO FORMAL RECORD, FILED WITH THE OWNER'S REPRESENTATIVE, AND BE MADE AVAILABLE FOR FUTURE REFERENCE.

1.05 THE CONTRACTOR SHALL PROVIDE A MINIMUM 48 HOUR ADVANCED NOTICE TO HBK ENGINEERING (319-338-7557) TO SCHEDULE A PRE-CONSTRUCTION WALK THROUGH WITH A HBK ENGINEERING REPRESENTATIVE. THIS WALK THROUGH MUST BE COMPLETED PRIOR TO THE COMMENCEMENT OF ANY WORK WITHIN THE LIMITS OF THIS PROJECT.

1.06 THE ENGINEER WILL NOT BE RESPONSIBLE NOR ASSUME ANY LIABILITY FOR NEGLIGENT ACTS OR ERRORS OF OMISSIONS OF ANY CONTRACTOR, ANY SUBCONTRACTOR, OR ANY OF THE CONTRACTOR'S OR SUBCONTRACTORS' AGENTS OR EMPLOYEES OR ANY OTHER PERSONS (EXCEPT ENGINEER'S OWN EMPLOYEES) AT THE PROJECT SITE OR OTHERWISE PERFORMING ANY OF THE WORK OF THE PROJECT. ANY CONTRACTOR OR SUBCONTRACTOR, AS WELL AS THE ENGINEER, WILL BE RESPONSIBLE FOR HIS OWN SAFETY PROGRAM. NEITHER THE PROFESSIONAL ACTIVITIES OF THEENGINEER, NOR THE PRESENCE OF THE ENGINEER OR HIS OR HER EMPLOYEES AND SUB-CONSULTANTS AT THE CONSTRUCTION SITE, SHALL RELIEVE ANY CONTRACTOR OF HIS OR HER OBLIGATIONS, DUTIES AND RESPONSIBILITIES INCLUDING, BUT NOT LIMITED TO, CONSTRUCTION MEANS, METHODS, SEQUENCE, TECHNIQUES OR PROCEDURES NECESSARY FOR PERFORMING, SUPERINTENDING OR COORDINATING ALL PORTIONS OF THE WORK OF CONSTRUCTION IN ACCORDANCE WITH THE CONTRACT DOCUMENTS AND ANY HEALTH OR SAFETY PRECAUTIONS REQUIRED BY ANY REGULATORY AGENCIES. THE ENGINEER AND HIS OR HER PERSONNEL HAVE NO AUTHORITY TO EXERCISE ANY CONTROL OVER ANY CONSTRUCTION CONTRACTOR OR OTHER ENTITY OR THEIR EMPLOYEES IN CONNECTION WITH ANY HEALTH OR SAFETY PRECAUTIONS.

SECTION 2.0 MATERIALS

2.01 ALL MATERIALS INSTALLED WITHIN THE LIMITS OF THIS PROJECT SHALL BE IN CONFORMANCE WITH STANDARD RECOMMENDATIONS OF THE NATIONAL ELECTRICAL MANUFACTURER'S ASSOCIATION (NEMA) AND AMERICAN NATIONAL STANDARDS INSTITUTE (ANSI).

2.02 ALL TRENCHED CONDUIT, ELBOWS, AND COUPLINGS SHALL BE HDPE UNLESS OTHERWISE NOTED. ALL BORED CONDUIT AND COUPLINGS SHALL BE HDPE SDR-13 UNLESS OTHERWISE NOTED.

2.03 JOB SITE MATERIAL WILL BE DELIVERED TO AND MAINTAINED AT THE STREET WORK AREAS IN A WELL MANAGED MANNER, TO MINIMIZE CONGESTION OR INCONVENIENCE TO OTHER WORKERS, OR CONTRACTORS WORKING UNDER ALTERNATE PERMITS.

SECTION 3.0 GENERAL NOTES

3.01 CONTRACTOR IS ADVISED TO READ ALL NOTES ON DRAWINGS, CAREFULLY.

3.02 THE CONTRACTOR SHALL VERIFY EXISTING STREET RIGHTS OF WAY TO THE EXTENT NECESSARY TO VERIFY PROPOSED WORK REMAINS WITHIN THESE RIGHTS OF WAY AND DOES NOT INFRINGE ONTOPRIVATE PROPERTY NOT OWNED BY THE OWNER.

3.03 SCALE FOR DRAWINGS IS FOR GENERAL INFORMATION ONLY. LOCATIONS AND DIMENSIONS SHALL BE TAKEN AS SHOWN AND THE DRAWINGS SHALL NOT BE SCALED.

3.04 CONTRACTOR SHALL COORDINATE ALL WORK WITH ALL PUBLIC AND PRIVATE UTILITIES AS WELL AS CITY AND STATE AGENCIES.

3.05 INSTALL CONDUIT MINIMUM OF 10'-0" BELOW ALL WATERWAYS AND CULVERT CROSSINGS. CONTRACTOR TO VERIFY CULVERT DEPTH PRIOR TO CONDUIT INSTALLATION.

3.06 NUMEROUS ELEVATION CHANGES. TOPOGRAPHY LINES SHOWN ON DRAWING FOR REFERENCE ONLY.

3.07 DUE TO EXISTING FORESTED AREAS, SOME TREE REMOVAL AND TRIMMING REQUIRED FOR CONDUIT OR HANDHOLE INSTALLATION WITHIN THE RIGHT-OF-WAY.

3.08 RIGHT OF WAY LOCATIONS ARE APPROXIMATE. FIBER INSTALLATION 6'-0" MINIMUM OFF RIGHT-OF-WAY.

SECTION 4.0 SAFETY

4.01 CONTRACTOR SHALL TAKE ALL NECESSARY SAFETY PRECAUTIONS TO PROTECT UTILITIES, PEDESTRIANS, WORKERS AND VEHICULAR TRAFFIC. THE CONTRACTOR SHALL PROVIDE TEMPORARYFENCES, BARRICADES, ETC. AS REQUIRED TO PROTECT ADJACENT PROPERTY AND THE PUBLIC DURING ALL PHASES OF CONSTRUCTION.

4.02 THE CONTRACTOR SHALL PROVIDE ALL TEMPORARY BARRICADES, SIGNAGE, WARNING LIGHTS AND OTHER DEVICES AND KEEP ALL TRAFFIC CONTROL OPERATIONAL 24 HOURS A DAY AT ALL OPEN TRENCH LOCATIONS AND AT LOCATIONS WHICH DO NOT HAVE A FINISHED SURFACE OR ROAD PLATES.

4.03 THE CONTRACTOR SHALL COORDINATE INGRESS AND EGRESS TO ADJACENT PROPERTIES AND/OR CONSTRUCTION AFFECTED BY THE PROPOSED WORK.

SECTION 5.0 EXISTING UTILITIES

5.01 EXISTING CONDITIONS, STRUCTURES, UTILITIES AND SURFACE FEATURES SHOWN WERE OBTAINED FROM UTILITY ATLASES AND FROM DRAWINGS FURNISHED BY THE VARIOUS UTILITIES AND ARE ASSUMED TO BE ACCURATE AND CORRECT. THE CONTRACTOR SHALL PERFORM HIS OWN SURVEY AND VERIFY ALL EXISTING CONDITIONS AND DIMENSIONS OF EXISTING STRUCTURES PRIOR TO STARTING ANY WORK.

5.02 FOR BORED INSTALLATIONS, THE CONTRACTOR SHALL PERFORM TEST HOLES AT ALL UTILITY CROSSINGS TO VERIFY THE LOCATION AND ELEVATION OF ALL UTILITIES PRIOR TO ANY EXCAVATION, AND TO LOCATE ANY POSSIBLE OBSTRUCTIONS. ALL TEST HOLES SHALL BE CONSIDERED INCIDENTAL TO THE CONTRACT.

5.03 FOR TRENCHED INSTALLATIONS, THE CONTRACTOR SHALL PERFORM TEST HOLES PER PLAN OR AS DEEMED NECESSARY TO VERIFY THE LOCATION AND ELEVATION OF ALL UTILITIES PRIOR TO ANY EXCAVATION, AND TO LOCATE ANY POSSIBLE OBSTRUCTIONS. ALL TEST HOLES SHALL BE CONSIDERED INCIDENTAL TO THE CONTRACT.

5.04 THE CONTRACTOR SHALL FIELD VERIFY LOCATIONS OF ALL OVERHEAD OBSTRUCTIONS PRIOR TO THE COMMENCEMENT OF WORK.

5.05 EXISTING UTILITIES ARE SHOWN AT THEIR APPROXIMATE LOCATION. THE CONTRACTOR SHALL CONTACT IOWA ONE CALL AT 1(800)-292-8989 A MINIMUM OF 48 HOURS (EXCLUDING WEEKENDS AND GOVERNMENT HOLIDAYS) PRIOR TO COMMENCEMENT OF ANY PAVEMENT CUTS OR EXCAVATION TO REQUEST LOCATING AND MARKING OF EXISTING UTILITIES PRIOR TO PERFORMING ANY EXCAVATION WORK IN OR AROUND ANY UTILITY.

5.06 ALL EXCAVATION WORK NEAR AND AROUND EXISTING STRUCTURES AND UTILITIES SHALL BE BY HAND METHOD.

5.07 ALL DISCREPANCIES SHOULD BE REPORTED TO ENGINEER OF RECORD AT HBK ENGINEERING (319-338-7557). ANY QUESTIONS OR COMMENTS THE CONTRACTOR MAY HAVE ARE TO BE DISCUSSED WITH THE OWNER AND ENGINEER PRIOR TO CONSTRUCTION.

5.08 FURTHER, THE CONTRACTOR SHALL RECORD THE LOCATION AND ELEVATION OF ALL UTILITIES ENCOUNTERED, AND INSTALLATION OF NEW WORK, AS THE WORK PROGRESSES AND SHALL PREPARE RECORD DRAWINGS (RED-LINES) BASED ON HIS RECORDS. AS PART OF THE RECORD DRAWINGS, CONTRACTOR SHALL ALSO PROVIDE HORIZONTAL AND VERTICAL CONFIGURATION OFCONDUITS WHERE MULTIPLE CONDUITS ARE INSTALLED. THESE RECORDS TO BE SUPPLIED TO HBK ENGINEERING, LLC AT COMPLETION OF WORK.

5.09 AT SEWER DRAINS FROM HOMES OR OTHER BUILDINGS, IF THERE IS INTERFERENCE, REPLACE INKIND. IN ALL CASES WHERE SEWER WORK IS DONE, A PERMIT SHOULD BE OBTAINED AND A SEWER INSPECTOR SHOULD BE PRESENT DURING THE WORK.

5.10 CONTRACTOR SHALL SUPPORT ALL WATER MAINS IN EXCESS OF 12" IN DIAMETER WITH A PERMANENT TYPE OF STRUCTURE UNLESS OTHERWISE NOTIFIED BY THE WATER DEPARTMENT, AND IS INCLUDED IN COST FOR DOING THE WORK. AT NO TIME DURING CONSTRUCTION SHALL WATER MAINS GO UNSUPPORTED FOR A SPAN GREATER THAN 8'-0".

5.11 CONTRACTOR RESPONSIBLE FOR OBTAINING AND PROVIDING REVIEW AND DESIGN OF ANY AND ALL TEMPORARY UTILITY SUPPORT SYSTEMS PRIOR TO CONSTRUCTION.

5.12 CONTRACTOR SHALL NOTIFY ALLIANT IN SITUATIONS WHERE STEEL PIPE CONDUCTOR IS NICKED DURING EXCAVATION. ALLIANT WILL EVALUATE THE EXTENT OF THE DAMAGE SO AS TO DETERMINE WHETHER REPAIR IS REQUIRED PRIOR TO BACKFILL AND GRADE SURFACE RESTORATION.

SECTION 6.0 WORK

6.01 NO STORAGE OF EQUIPMENT OR MATERIALS IN THE ROADWAY IS PERMITTED UNLESS THE CONTRACTOR OBTAINS WRITTEN PERMISSION FROM THE CITY, STATE, AND/OR GOVERNING BODY.

6.02 THE CONTRACTOR SHALL MARK ALL OPENINGS ON THE SURFACE PRIOR TO THE COMMENCEMENT OF EXCAVATION. ALL OPENINGS ON PAVED SURFACES SHALL BE SAW CUT PRIOR TO REMOVAL OF PAVEMENT.

6.03 CONTRACTOR RESPONSIBLE FOR OBTAINING AND PROVIDING REVIEW AND DESIGN OF ANY AND ALL SHORING SYSTEMS PRIOR TO CONSTRUCTION.

6.04 CONTRACTOR SHALL ASSUME ALL ELECTRICAL CABLES ARE ENERGIZED AND SHALL BE SUPPORTED SO AS NOT TO STRESS ANY PORTION OF THE CABLE.

6.05 CONTRACTOR SHALL PROVIDE APPROPRIATE ENGINEERED DE-WATERING MEASURES, IF NECESSARY, TO ENSURE GROUNDWATER TABLE REMAINS AT A DEPTH BELOW THE BASE OF THE EXCAVATION AT ALL TIMES DURING EXCAVATION, INSTALLATION AND BACKFILLING OPERATIONS.

6.06 THE ENGINEER SHALL BE NOTIFIED FOR RESOLUTION OF SITUATIONS WHERE CONDUIT DEPTH BELOW GRADE DEVIATES BY MORE THAN 3" AS CURRENTLY SHOWN ON PLAN/PROFILE DRAWINGS.

6.07 THE ENGINEER SHALL ALSO BE NOTIFIED FOR DISPOSITION OF SITUATIONS WHERE THE CONDUIT CANNOT MAINTAIN SEPARATIONS PER PLAN.

SECTION 7.0 RESTORATION

7.01 THE CONTRACTOR SHALL OBTAIN A PERMIT TO PERFORM ALL RESTORATION WORK IN THE CONTRACTOR'S NAME. ALL PAVING SHALL BE COMPLETED WITHIN 15 WORKING DAYS AFTER EXCAVATION IS BACKFILLED UNLESS OTHERWISE ARRANGED IN ADVANCE WITH GOVERNING AGENCY.

7.02 CONTRACTOR SHALL BREAK OUT SIDEWALK, DRIVEWAY, CURB AND GUTTER, PAVEMENT AND RESTORE TO PERMANENT CONDITION. CONTRACTOR TO CONFORM CONCRETE TO COLOR, FINISH, AND TEXTURE OF EXISTING SIDEWALKS, CURB AND GUTTER.

7.03 THE CONTRACTOR IS RESPONSIBLE FOR THE RESTORATION OF THE AREAS DISTURBED BY CONSTRUCTION ACTIVITIES. CONTRACTOR TO PAY ALL FEES AND OBTAIN ALL PERMITS FOR RESTORATION.

7.04 THE CONTRACTOR IS TO RESTORE ALL DAMAGED STRUCTURES AND UTILITIES TO THE SATISFACTION OF THE FACILITY OWNER, IN THE EVENT THAT DAMAGE OCCURS.

LEGEND

FENCE
EXISTING ROW LINE
EXISTING FIBER OPTIC LINE
EXISTING OVERHEAD LINE
EXISTING STORM DRAIN
EXISTING ELECTRIC (BURIED)
EXISTING GAS LINE
EXISTING STORM SEWER
EXISTING SANITARY SEWER
EXISTING WATER LINE
EXISTING ICN FIBER
EXISTING ICN (AERIAL)
EXISTING ICN CONDUIT
TO BE ABANDONED
PROPOSED ICN FIBER
PROPOSED AERIAL
PROPOSED ICN CONDUIT
CENTERLINE OF ROAD
EXISTING WATERWAY BOUNDARY
PROPOSED ICN HANDHOLE
EXISTING ICN HANDHOLE
PROPOSED HANDHOLE (BY OTHERS)
EXISTING STORM CULVERT LOCATION
EXISTING STORM MANHOLE
EXISTING STORM INLET
EXISTING SANITARY MANHOLE
EXISTING SANITARY CLEAN OUT
EXISTING FIBER OPTIC MANHOLE
EXISTING FIBER OPTIC HANDHOLE
EXISTING COMMUNICATIONS MANHOLE
EXISTING COMMUNICATIONS HANDHOLE
EXISTING COMMUNICATIONS PEDESTAL
EXISTING ELECTRIC MANHOLE
EXISTING ELECTRIC TRANSFORMER
EXISTING ELECTRIC PEDESTAL
EXISTING ELECTRIC HANDHOLE
EXISTING UTILITY POLE
EXISTING GUY ANCHOR
EXISTING LIGHT POLE
EXISTING WATER MANHOLE
EXISTING WATER VALVE
EXISTING MONITORING WELL
EXISTING FIRE HYDRANT
EXISTING NATURAL GAS MANHOLE
EXISTING NATURAL GAS VALVE
EXISTING TREE

IOWA ONE CALL 1-800-292-8989 www.iowaonecall.com 811

HENRY COUNTY HEALTH CLINIC
NEW LONDON, IOWA

1	90% PLAN SUBMITTAL	3/23/2022
2	95% PLAN SUBMITTAL	3/28/2022
3	PERMIT PLAN SUBMITTAL	3/30/2022
4	FINAL PERMIT PLAN SUBMITTAL	4/5/2022

IOWA COMMUNICATIONS NETWORK
400 EAST 14TH STREET
GRIMES STATE OFFICE BUILDING
DES MOINES, IOWA 50319
ICN © 2021, COPY WITH PERMISSION

ICN GENERAL NOTES

STANDARD INSTALLATION REQUIREMENTS:

GENERAL REQUIREMENTS:

1. THE CONTRACTOR SHALL POTHOLE ALL EXISTING UTILITIES.
2. PROVIDE THE OWNERS OF ANY NATURAL GAS UTILITY 48 HOURS ADVANCE NOTICE THAT WORK IS SCHEDULED IN THE VICINITY OF THEIR LINES/MAINS SO THAT THEY CAN PROVIDE STANDBY AND PROTECT SERVICES.
3. MAINTAIN PROOF OF NOTIFICATION TO AND RECEIPT OF NOTIFICATION BY THE GAS UTILITY.
4. PERMITS AND COORDINATION

4.1. SECURE ALL NECESSARY STATE AND LOCAL (CITY, COUNTY, ETC.) PERMITS, PUBLIC OR PRIVATE EASEMENTS, FACILITY PERMITS, USAGE PERMITS, AND ANY OTHER PERMIT REQUIRED BY AN AUTHORITY HAVING JURISDICTION (AHJ). ALL CONTRACTORS AND SUBCONTRACTORS MUST BE LICENSED AND BONDED WITH THE CITY OF CLEAR LAKE.

4.2. ICN WILL OBTAIN AND PROVIDE COPIES OF IDOT PERMITS.

4.3. IF PERMITS ARE REQUIRED TO BE IN THE NAME OF THE OWNER RATHER THAN THE CONTRACTOR, THE CONTRACTOR SHALL PREPARE THE PERMIT FOR THE OWNER'S SIGNATURE.

4.4. COORDINATE INSTALLATION WITH ALL OWNERS AND AHJ OVER THE ROUTE, THE FIBER, RIGHT-OF-WAY AND BUILDINGS IN WHICH END POINTS WILL BE LOCATED.

4.5. FAILURE TO COORDINATE WITH THE AHJ AND TO OBTAIN ALL NECESSARY PERMITS IS AT THE PERIL OF THE CONTRACTOR.

4.6. RIGHT-OF-WAY PERMIT FEES ARE AN AUTHORIZED EXTRA ABOVE THE QUOTED BID PRICE. EXCAVATION PERMITS SHALL BE BY THE CONTRACTOR.

4.7. ENSURE ALL FACILITIES ARE PLACED WITHIN THE PUBLIC RIGHT-OF-WAY.

5. ENSURE THAT PERSONNEL WORKING IN THE ROW ARE EQUIPPED WITH AND USE PROPER SAFETY EQUIPMENT AND ATTIRE.
6. ALL TOOLS AND TEST EQUIPMENT REQUIRED TO DO A PROJECT SHALL BE PROVIDED BY THE CONTRACTOR OR ITS SUBCONTRACTOR(S). SECURITY OF TOOLS AND TEST EQUIPMENT SHALL BE THE RESPONSIBILITY OF EACH WORKER. THE ICN SHALL NOT BE RESPONSIBLE FOR THE SECURITY OF ANY PROPERTY LEFT ON ICN'S PROPERTY OR ON PROPERTY CONTROLLED BY THE ICN OR THE STATE OF IOWA.
7. CONTRACTOR SHALL BE RESPONSIBLE FOR INSTRUCTING ITS EMPLOYEES IN SAFETY MEASURES CONSIDERED APPROPRIATE FOR THE JOB. IN ADDITION, THE CONTRACTOR SHALL NOT PERMIT PLACING OR USE OF TOOLS OR MATERIALS IN TRAFFIC LANES OR OTHER LOCATIONS. THE TOOLS OR MATERIALS SHALL NOT BE PLACED IN SUCH A MANNER SO AS TO CREATE SAFETY HAZARDS TO STATE EMPLOYEES, CONTRACTING AGENCY EMPLOYEES, THE PUBLIC OR THEMSELVES.
8. EXCAVATIONS AND TRENCHES: THE ICN REQUIRES ALL OPEN EXCAVATIONS OR TRENCHES TO BE MONITORED AND ATTENDED TO DURING CONSTRUCTION PER. THE ICN REQUIRES ALL OPEN EXCAVATIONS AND TRENCHES BACKFILLED THE SAME DAY. IF THE CONTRACTOR IS REQUIRED TO LEAVE AN EXCAVATION OR TRENCH OPEN, THEN THE CONTRACTOR SHALL PROPERLY FENCE AND/OR COVER THE EXCAVATION FOR SAFETY. CONTRACTOR SHALL FOLLOW ALL OSHA REQUIREMENTS FOR EXCAVATION AND TRENCH SAFETY.
9. CONTRACTOR AND ITS EMPLOYEES SHALL COMPLY WITH ALL OSHA REGULATIONS. THE CONTRACTOR SHALL COMPLY WITH ALL APPLICABLE STATE AND FEDERAL LAWS.
10. CONTRACTOR SHALL COMPLY WITH ALL IOWA ONE CALL REQUIREMENTS AS PROVIDED BY IOWA CODE, CHAPTER 480.
11. PROVIDE ALL LABOR AND SUPERVISION FOR THE PROJECT.
12. PROVIDE AND INSTALL MATERIALS NEEDED TO RESULT IN A FULLY FUNCTIONAL SYSTEM MEETING ICN STANDARDS, WHETHER OR NOT THE MATERIALS OR METHODS ARE SPECIFICALLY MENTIONED IN THIS DOCUMENT. SEE THE LIST OF ICN-FURNISHED MATERIALS.
13. INSTALL CABLE ROUTE MARKERS FURNISHED BY ICN. WHERE POSSIBLE, INSTALL MARKERS ADJACENT TO POLES, BUILDINGS OR IN OTHER PROTECTED AREAS.
14. A COPY OF THIS SCOPE OF WORK AND THE ENGINEERING PLAN FOR THIS PROJECT SHALL BE ON SITE AND AVAILABLE ANY TIME WORK IS BEING PERFORMED. FAILURE TO HAVE THE REQUIRED DOCUMENTS ON SITE MAY RESULT IN ICN REQUIRING THE CONTRACTOR TO STOP WORKING UNTIL THE REQUIRED DOCUMENTS ARE ON-SITE.
15. SUBCONTRACTORS SHALL MEET THE SAME QUALIFICATIONS STATED FOR CONTRACTORS. CONTRACTOR SHALL OBTAIN APPROVAL OF THE CONTRACTING AGENCY'S PROJECT MANAGER PRIOR TO USING A SUBCONTRACTOR ON ANY PROJECT.
16. RESTORE ALL DAMAGE TO PRIVATE PROPERTY, RIGHT-OF-WAY, ICN PROPERTY, AND ANY OTHER PROPERTY DAMAGED IN THE COURSE OF THE WORK.

16.1.ANY DISRUPTION OF GRASS IN AN INDIVIDUAL'S YARD OR IN A PRIVATE MAINTAINED AREA OF THE PUBLIC RIGHT OF WAY (THE AREA BETWEEN THE SIDEWALK AND THE STREET CURB) MUST BE RESTORED THROUGH RE-SODDING. ANY DISRUPTION OF THE GRASS IN THE MEDIAN WAY OR AN UNIMPROVED SHOULDER MUST BE RESTORED EITHER THROUGH RE-SODDING OR RE-SEEDING AS REQUIRED BY THE ROW OWNER.

16.2.AREAS SHALL BE RESTORED TO ORIGINAL OR BETTER CONDITION.

16.3. DIRT SHALL BE MECHANICALLY COMPACTED AROUND HANDHOLES AND PITS.

16.4. LAWNS SHALL BE SODDED WITH LIKE GRASS.

16.5. CONTRACTOR IS RESPONSIBLE FOR WATERING THE SOD UNTIL IT HAS KNITTED TO THE GROUND BENEATH.

16.6.ALL DEBRIS SHALL BE REMOVED FROM THE CONSTRUCTION AREAS INCLUDING BUT NOT LIMITED TO: CONSTRUCTION MATERIALS, TRASH, LARGE OBJECTS OR STONES WITHIN BACKFILLED AREAS, ETC.

DUCT INSTALLATION REQUIREMENTS

1. HDPE DUCT SHALL BE NO LESS THAN 36-42 INCHES DEEP.
2. DUCT SHALL BE INSTALLED IN THE PUBLIC RIGHT-OF-WAY.
3. WHEN CROSSING A HIGHWAY IN DOT RIGHT-OF-WAY, DUCT SHALL BE NO LESS THAN 48 INCHES BELOW GRADE UNDER THE ROADWAY AND SHOULDERS. HDPE MAY BE USED UNDER THE ROADWAY AND SHOULDERS IF INSTALLED AT A MINIMUM DEPTH OF 48".
4. SHOULD IT BE NECESSARY TO CROSS PRIVATE PROPERTY, THE CONTRACTOR MAY APPLY TO THE ICN FOR AN EXCEPTION, AND REQUEST PERMISSION TO SECURE AN EASEMENT. THE EASEMENT IS REQUIRED TO BE IN THE NAME OF ICN AND THE CONTRACTOR SHALL HAVE THE EASEMENT PREPARED BY A LAND SURVEYOR LICENSED IN THE STATE OF IOWA. CONTRACTOR SHALL BE RESPONSIBLE FOR ALL FEES UNLESS PREVIOUSLY AUTHORIZED BY THE ICN.
5. AT THE CONCLUSION OF THE PROJECT, PROVIDE AND LEAVE A PULL ROPE IN ALL DUCTS, CONDUITS AND PATHWAYS, INCLUDING INDOOR, OUTDOOR, NEW AND EXISTING.
6. DIRT SHALL BE MECHANICALLY COMPACTED AT ALL DUCT SPLICES, BORE PITS AND AROUND HANDHOLES.
7. GROUND SHALL BE RESTORED TO THE CONDITION FOUND PRIOR TO CONSTRUCTION AND DEBRIS REMOVED PRIOR TO SODDING OR SEEDING.
8. ALL CONDUITS SHALL BE PLUGGED VIA DUCT SEAL OR OTHER METHOD UPON COMPLETION OF CABLE INSTALLATION.
9. IF SCHEDULE 40 PVC CONDUIT IS UTILIZED, ALL ANGLES (45, 90 DEGREE OR OTHER) REQUIRE FITTINGS TO LONG SWEEP TO ACCOMMODATE MINIMUM CABLE BEND RADIUSES.
10. THE ICN REQUIRES PICTURES BY THE CONTRACTOR AND/OR ON- SITE INSPECTION BY ICN STAFF PRIOR TO COMPLETION OF THE PROJECT WHERE PIPE AND FITTINGS ARE NOT EXPOSED; I.E. UNDERGROUND, BEHIND A WALL, ETC.

HANDHOLE REQUIREMENTS

1. INSTALL HANDHOLES SO THAT THE LID IS LEVEL AND FLUSH WITH THE SURROUNDING NATURAL GRADE. THE LID SHALL NOT EXTEND ABOVE THE SURROUNDING NATURAL GRADE.
2. PROVIDE ¼" OPENING HARDWARE CLOTH TYPE SCREEN WIRE BELOW THE HANDHOLE.
3. PROVIDE 5-6 INCHES OF ¾" CRUSHED ROCK BELOW THE HANDHOLE. ROCK SHALL BE COMPACTED. GRAVEL SHALL EXTEND A MINIMUM OF 6 INCHES BEYOND THE OUTSIDE WALLS OF THE HANDHOLE. DO NOT USE PEA GRAVEL OR OTHER ROUND STONE.
4. DO NOT PLACE GRAVEL INSIDE HANDHOLE ABOVE THE HARDWARE CLOTH.
5. CONDUIT SHALL EXTEND A MINIMUM OF 6" ABOVE THE HARDWARE CLOTH/GRAVEL.
6. FAILURE OF THE CONTRACTOR TO INSTALL HANDHOLES AS SPECIFIED WILL CAUSE THE CONTRACTOR TO RETURN AND RE-INSTALL THE HANDHOLE ACCORDING TO THIS SPECIFICATION BEFORE PAYMENT FOR THE PROJECT IS MADE.
7. HANDHOLE INSTALLATIONS SHALL FOLLOW ICN STANDARD TYPICAL INSTALLATION; SEE TYPICAL DRAWING.

FIBER INSTALLATION REQUIREMENTS

1. INSTALL FIBER ACCORDING TO INDUSTRY "BEST PRACTICES".
2. THE CONTRACTOR SHALL NOT VIOLATE THE MANUFACTURER'S MINIMUM INSTALLATION BEND RADIUS WHEN THE CABLE IS UNDER TENSION, OR THE MINIMUM INSTALLED BEND RADIUS.
3. TO PREVENT EXCEEDING THE MANUFACTURER'S MAXIMUM PULLING TENSION DURING INSTALLATION OF THE FIBER OPTIC CABLE, THE CONTRACTOR SHALL USE A "BREAK-AWAY" PULLING SWIVEL WHEN INSTALLING CABLE.
4. THE "BREAK-AWAY" FUNCTION SHALL ACTIVATE AT OR BELOW THE MAXIMUM PULLING TENSION SPECIFIED BY THE CABLE MANUFACTURER.
5. THE CONTRACTOR SHALL TEST ALL STRANDS OF THE FIBER, ON THE REEL, PRIOR TO BEGINNING FIBER INSTALLATION. CONFIRM THAT ALL STRANDS MEET MANUFACTURER'S LOSS SPECIFICATIONS.
6. THE CONTRACTOR SHALL FIELD VERIFY ALL LENGTHS AND EXISTING CONDITIONS PRIOR TO STARTING CONSTRUCTION.
7. SLACK LOOPS IN HANDHOLES SHALL BE COILED, INSTALLED, AND SECURED TO AVOID DAMAGE TO THE COIL AND NOT INTERFERE WITH LIDS.
8. SLACK LOOPS AT SPLICES SHALL BE COILED TO MATCH THE EXISTING FIBER CABLE TAILS AND ALLOWANCE FOR SPLICE PREPARATION.
9. ICN FIBER IN ALL HANDHOLES SHALL BE LABELED WITH ICN WRAP AROUND CABLE TAGS OR OTHER LABELED CABLE TAGS.

BUILDING ENTRY REQUIREMENTS

1. WEATHER-SEAL ALL PENETRATIONS.
2. USE MORTAR OR SIMILAR CEMENT TO SEAL PENETRATION OF BRICK OR CEMENT BLOCK.
3. FIRESTOP PENETRATIONS OF ANY FIRE-RATED FLOOR, WALL OR CEILING.
4. REPLACE THE FIRESTOP MATERIAL IN ANY EXISTING FIRESTOPPED PENETRATION USED BY THE CONTRACTOR.
5. ALL OUTDOOR CONDUITS, OF ANY LENGTH, SHALL BE GALVANIZED IRON PIPE (GIP). EMT, PVC AND PLASTIC ARE PROHIBITED.
6. IMMEDIATELY UPON INSTALLATION, SEAL THE ENDS OF ALL DUCTS WITH DUCT SEAL OR EXPANSION FOAM TO PREVENT SILTATION OR FILLING WITH MOISTURE. THIS APPLIES TO BOTH NEW AND EXISTING DUCTS.
7. AT THE CONCLUSION OF THE PROJECT, ENSURE THAT A PULL ROPE IS LEFT IN ALL PATHWAYS, BOTH INSIDE AND OUTSIDE, NEW AND EXISTING.

LOCATE FACILITY REQUIREMENTS

1. TRACER WIRE SHALL BE CONTINUOUS.
2. SPLICES IN THE TRACER WIRE ARE NOT ALLOWED. IF TRACER WIRE IS ACCIDENTALLY SEVERED, REQUEST PERMISSION FROM ICN TO SPLICE.
3. SPLICE ONLY IN HANDHOLES.
4. USE EITHER AN EPOXY SPLICE KIT, SCOTCH 3M 3832 OR A MOLEX PERMASEAL BUTT SPLICE. 10-12 GA. SPLICE MATERIALS SHALL BE DESIGNED FOR UNDERGROUND APPLICATIONS.
5. LEAVE THE WIRE SPLICE VISIBLE IN THE HANDHOLE.
6. ROUTE A GROUND WIRE FROM THE GROUND INSIDE THE BUILDING, THROUGH THE ENTRY TO THE TII 163 TERMINAL.
7. SECURE ALL RISER CONDUITS WITH 3 EACH TWO-HOLE CONDUIT STRAPS.
8. WIRE THE PEDESTAL/TERMINAL SO THAT LOCATES MAY BE PERFORMED IN ANY DIRECTION AND FROM THE FAR END.
9. DO NOT LEAVE ANY EXPOSED TRACER WIRE OR GROUND WIRE.
10. PERMANENTLY GROUND THE TRACER WIRE AT THE HANDHOLE ON THE FURNISHED GROUND ROD.
11. AT THE CONCLUSION OF THE PROJECT LEAVE THE TRACER WIRE SHIELD SHORTED TO GROUND IN THE LOCATE TERMINAL.
12. USE TRACER WIRE THAT IS RATED FOR DIRECT BURIAL WHERE REQUIRED. TRACER WIRE SHALL BE #12 AWG, SOLID HF CCS 30 MIL HDPE HIGH FLEX TRACER WIRE: EITHER SOLID COPPER OR COPPER CLAD STEEL.
13. LABEL ALL WIRES IN THE LOCATE TERMINAL/PEDESTAL/TRIVIEW. (I.E. "GROUND", "FACING DMACC", "FACING NORTH" ETC.)
14. FAILURE TO LABEL THE LOCATE WIRES WILL CAUSE THE CONTRACTOR TO RETURN AND PROPERLY LABEL THE WIRES BEFORE PAYMENT FOR THE PROJECT IS MADE.
15. BOND TRACER WIRE(S) WITHIN SPLICE ENCLOSURES UTILIZING A 3M 4460-D\FO SHIELD BONDING KIT.
16. ROUTE TRACER WIRE(S) OUT OF SPLICE ENCLOSURE THROUGH A SINGLE PORT UTILIZING A FOSC CLOSURE SEALING KIT.
17. AT SPLICE LOCATIONS WITH NO LOCATE PEDESTAL, TRACER WIRES SHALL BE BONDED TOGETHER, WITHIN THE SPLICE ENCLOSURE.
18. AT EACH END OF ANY TRACER WIRE, USE APPROPRIATE-SIZED RING TERMINAL (CRIMP) CONNECTORS USING APPROPRIATE CRIMP TOOL; OR CREATE A WIRE EYELET AS PER TYPICAL INSTALLATION OF TRI-VIEW LOCATE PEDESTAL DETAIL.

DELIVERABLES/ACCEPTANCE:

1. CONTRACTOR SHALL PROVIDE CONSTRUCTION REDLINE AS-BUILTS WITH:

1.1. OFFSETS TO FIXED OBJECTS TO THE CABLE/CONDUIT RUNNING LINE, HANDHOLES AND NEW FACILITIES.

1.2. METER MARKS OF CABLE INSTALLATIONS AT HANDHOLE ENTRY/EXIT, SPLICE LOCATIONS, BUILDING ENTRIES, ETC.

1.3. DEPTHS OF CABLE AND/OR CONDUIT INSTALLATION.

1.4. ONE ORIGINAL SET OF AS-BUILT DRAWINGS MUST BE PROVIDED WITHIN TWO (2) WEEKS AFTER COMPLETION OF CONSTRUCTION FOR THE ICN MANAGEMENT RECORDS. REDLINE AS-BUILT DRAWINGS MUST BE COMPLETE.

2. CONTRACTOR SHALL PROVIDE SPLICING REDLINE OF ALL SPLICING COMPLETED AND VALIDATION THAT THE SPLICE PLAN WAS FOLLOWED.
3. CONTRACTOR IS RESPONSIBLE TO LOCATE FIBER UNTIL ACCEPTANCE BY THE ICN. ACCEPTANCE INCLUDES:

3.1. SUBMISSION OF CONSTRUCTION AND SPLICING RED LINE DRAWINGS BY CONTRACTOR.

3.2. ASSIGNMENT OF LINK NUMBER BY THE ICN (IF APPLICABLE).

3.3. SUBMISSION OF FINAL AS BUILT DRAWING BY THE ICN TO THE ICN NETWORK MAINTENANCE PROVIDER.

3.4. SUBMISSION TO IOWA ONE CALL AND THE ICN NETWORK MAINTENANCE PROVIDER'S CONTRACT LOCATER.

3.5. THE MEASUREMENTS IN THE STATEMENT OF WORK ARE ESTIMATES AND NEED TO BE VERIFIED BY THE CONTRACTOR.

4. ONLY WRITTEN MODIFICATIONS TO THIS SCOPE OF WORK ARE BINDING - VERBAL CHANGES TO THIS SCOPE OF WORK BY ANY PERSON OR PERSONS ARE NOT BINDING, UNLESS CONFIRMED IN WRITING.
5. FINAL PAYMENT WILL NOT BE PROCESSED UNTIL ALL DELIVERABLES ARE RECEIVED AND ACCEPTED.

IOWA ONE CALL
1-800-292-8989
www.iowaonecall.com

HENRY COUNTY HEALTH CLINIC
NEW LONDON, IOWA

1	90% PLAN SUBMITTAL	3/23/2022
2	95% PLAN SUBMITTAL	3/28/2022
3	PERMIT PLAN SUBMITTAL	3/30/2022
4	FINAL PERMIT PLAN SUBMITTAL	4/5/2022

IOWA COMMUNICATIONS NETWORK
400 EAST 14TH STREET
GRIMES STATE OFFICE BUILDING
DES MOINES, IOWA 50319
ICN © 2021, COPY WITH PERMISSION

Iowa Communications Network Date: 03/28/22
Project Name: New London Clinic
Project Number: 44220405

ICN Provided Material List (Warehouse Contact Paul Damge 515.725.4749)

Item	ICN Part Number	Qty	Notes
12 strand Armored SM fiber	012EUC-T4100D20 (Corning)	3,600	
24" X 36" X 36" TD handhole w/ 20T lid TIER 15 (Martin or New Basis)	PCA243636SN20	3	
TRIVIEW Test Station w/ Isolever 72" ORANGE (with 3 ICN decals applied) (Walker)	TVT172OB-EM9125	1	
Locate Box (custom with IsoLever)	ISOLOCBOX	1	
Erico 1/2" x 6' Ground Rod (Graybar)	611360	2	
Burndy 1/2" Ground Rod Clamp (Anixter)	GRC12	2	
ICN Snap Around Vulcan 4"X4" 15Mil Coiled Pvc (ICN-4X4-Sa)	1502345	6	
Wall-Mountable Connector Housing (WCH), Holds 2 CCH connector panels	WCH-02P	1	
CCH Pigtailed Splice Cassette, 6 F, SC UPC Simplex, SM PRE-ASSEMBLED	CCH-CS06-3C-P00RE	1	
Leviton storage ring 24-inch	48900-OFR	1	
*FOSC Closure Sealing Kit FAK-MULDRP-45-4P/CBL-ATT	1F6818-000	1	
*3M Scotchlok Shield Bond Connector 4460-D	4460-D	4	

LISTING OF CONDUIT & FIBER WORK

CONDUIT RUN	FROM	TO	LENGTH	2" CONDUIT	12 SM ARMORED FIBER, UNDERGROUND
1	TELECOM ROOM (HENRY COUNTY HEALTH CLINIC)	HH1	415	415	415
2	HH1	HH2	929	929	929
3	HH2	HH3	1038	1038	1038
4	HH3	EX. HH4	626	626	626
	TOTAL				**3008**

NOTE: THIS TABLE SHOWS APPROXIMATE LENGTHS IN CONDUIT ONLY AND DOES NOT INCLUDE ANY COILS OR SLACK FOR FINER CABLES, TRACER WIRE, PULL ROPE, ETC. CONTRACTOR SHALL VERIFY NECESSARY QUANTITIES INCLUDING COILS.

LISTING OF HANDHOLE WORK

HANDHOLE LABEL	HANDHOLE TYPE	ROUTE	STATION	12 SM ARMORED FIBER COIL
TELECOM ROOM (HENRY COUNTY HEALTH CLINIC)	BLDG	W. WASHINGTON ST	0+00	BLDG
HH1	24" X 36" X 36"	W. WASHINGTON ST	4+15	100
HH2	24" X 36" X 36"	S. ELM ST	13+44	100
HH3	24" X 36" X 36"	E. CLEVELAND ST	23+82	100
ICN EXISTING HH	EXISTING HH	E. CLEVELAND ST	30+08	100
TOTAL				**400**

ESTIMATE OF QUANTITIES

ITEM NO.	ITEM	UNIT	PLANNED TOTAL	AS-BUILT TOTAL
1	MOBILIZATION	LS	1	
2	INSTALL 24" X 36" X 36" HANDHOLE	EA	3	
3	2" HDPE CONDUIT	LF	3008	
4	12 SM ARMORED FIBER (TOTAL)	LF	3408	
5	12 SM ARMORED FIBER (RUNNING LINE)	LF	3008	
6	12 SM ARMORED FIBER (COIL)	LF	400	
7	ICN WARNING MARKERS	EA		
8	TRI-VIEW LOCATE STATION	EA	1	
9	GROUND ROD	EA	2	
10	SPLICE ENCLOSURE	EA	1	

NOTE: THE ICN IS PROVIDING 3,600' OF 12 STRAND ARMORED SM FIBER.

NOTE: CONDUIT INSTALLATION METHOD SHALL BE BORED UNDER ANY ROADWAYS, DRIVEWAYS, AND PAVED SURFACES. THE METHOD BETWEEN PLOW VERSUS BORE FOR CONDUIT INSTALLATION IS AT THE CONTRACTORS DISCRETION.

NOTE ON HDPE CONDUIT AND SPLICES:
1. HDPE SHALL BE ORANGE SMOOTH WALL SDR 13.5
2. DUCT SPLICES SHALL BE MADE OF THE FOLLOWING (IN ORDER OF PREFERENCE.)
   -CRIMP ON
   -CLAMP ON / BOLT ON (SPLIT COUPLINGS)
   -PUSH ON
3. *ALL SPLICES SHALL BE AIR AND WATER TIGHT*
4. DUCT SPLICES SHALL BE OF A TYPE MADE SPECIFICALLY FOR JOINING HDPE CONDUIT
5. ALL DUCT SPLICES SHALL BE MADE IN SUCH MANNER AS TO ALLOW CONTINUOUS PULLING OF CABLE THROUGH DUCT.

ANY EXCEPTIONS MUST BE AGREED UPON IN WRITING PRIOR TO CONSTRUCTION

IOWA ONE CALL 1-800-292-8989 www.iowaonecall.com 811

HENRY COUNTY HEALTH CLINIC
NEW LONDON, IOWA

1	90% PLAN SUBMITTAL	3/23/2022
2	95% PLAN SUBMITTAL	3/28/2022
3	PERMIT PLAN SUBMITTAL	3/30/2022
4	FINAL PERMIT PLAN SUBMITTAL	4/5/2022

IOWA COMMUNICATIONS NETWORK
400 EAST 14TH STREET
GRIMES STATE OFFICE BUILDING
DES MOINES, IOWA 50319
ICN © 2021, COPY WITH PERMISSION

SHEET LAYOUT

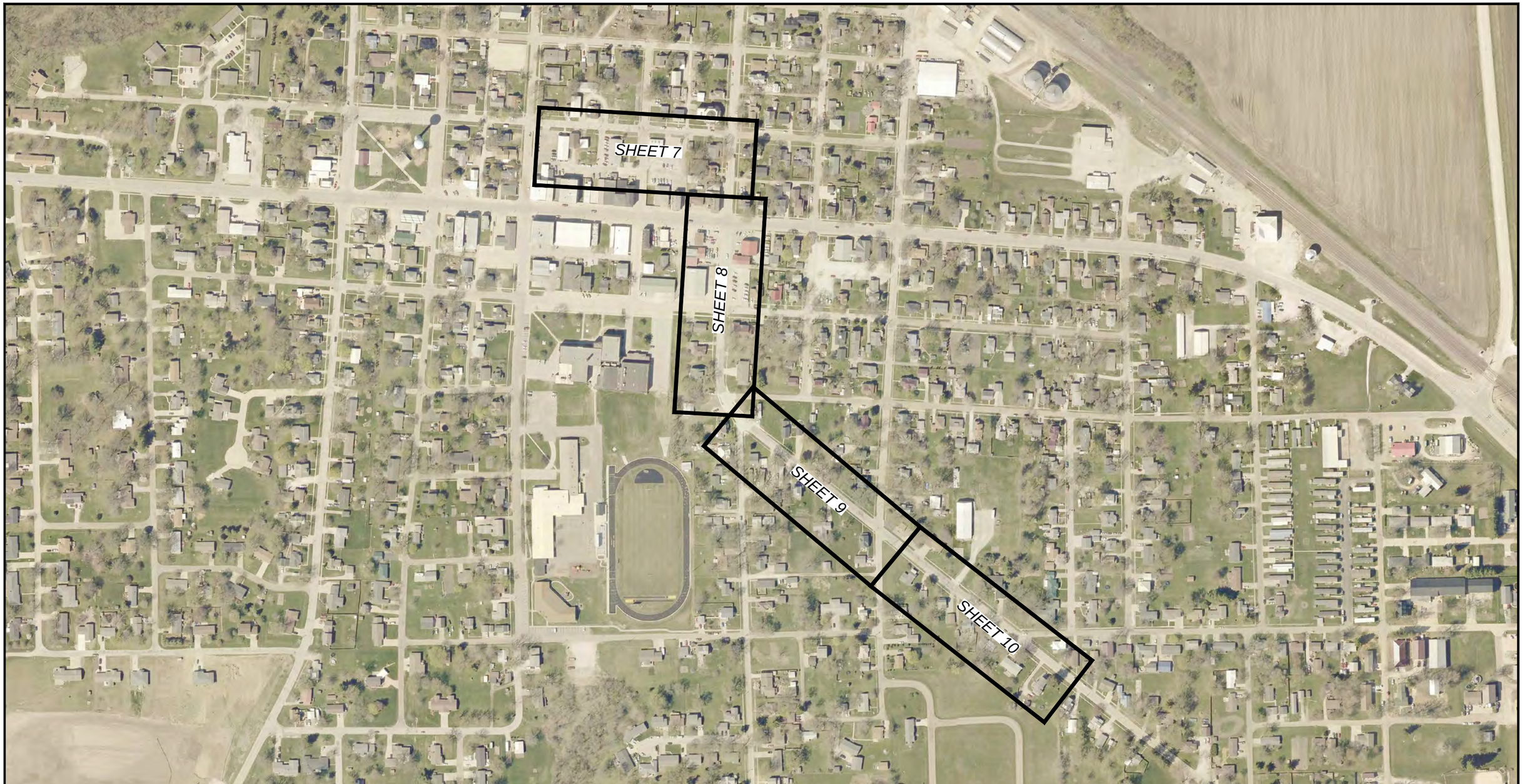

IOWA ONE CALL
1-800-292-8989
www.iowaonecall.com

HENRY COUNTY HEALTH CLINIC
NEW LONDON, IOWA

hbk ICN

1	90% PLAN SUBMITTAL	3/23/2022
2	95% PLAN SUBMITTAL	3/28/2022
3	PERMIT PLAN SUBMITTAL	3/30/2022
4	FINAL PERMIT PLAN SUBMITTAL	4/5/2022

IOWA COMMUNICATIONS NETWORK
400 EAST 14TH STREET
GRIMES STATE OFFICE BUILDING
DES MOINES, IOWA 50319
ICN © 2021, COPY WITH PERMISSION

FILE: H:\Project\220156\dwg\22-0156 TITLE.dwg | OSP PROJECT LOG #: 44220405 | LINK NAME: 1625 | SCALE: NONE | SIZE: 11" X 17" | SHEET LAYOUT | PAGE 5 OF 23

DETAIL 1
INTERIOR ROUTE OF HCHC TELECOM ROOM

1. RUN 20'-0" OF FIBER TO EQUIPMENT RACK.
2. ROUTE CABLE TO EXISTING CABINET. LEAVE A 50' SLACK COIL FOR TERMINATIONS. ROUTE TRACER WIRE FROM EXTERIOR LOCATE POINT.
3. COIL TO BE LEFT IN LEVITON STORAGE RING ON THE WALL FOR SPLICER ACCESS. CONTRACTOR TO TEMPORARILY BOND 12F/A CABLE TO GROUND BAR WITH #10 COPPER WIRE; LEAVE ENOUGH COPPER SLACK TO REACH INSIDE CABINET.
4. CORE THROUGH EXTERIOR WALL TO ABOVE INTERIOR CEILING TILES.
5. PULL FIBER ABOVE CEILING TILES.
6. PULL FIBER THROUGH PROPOSED OPENING IN CEILING TILE TO THE CABINET ON WALL.

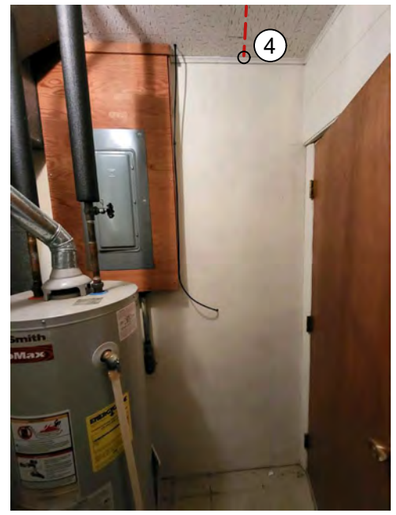

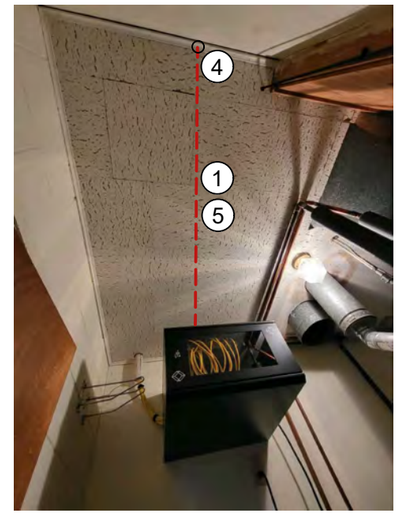

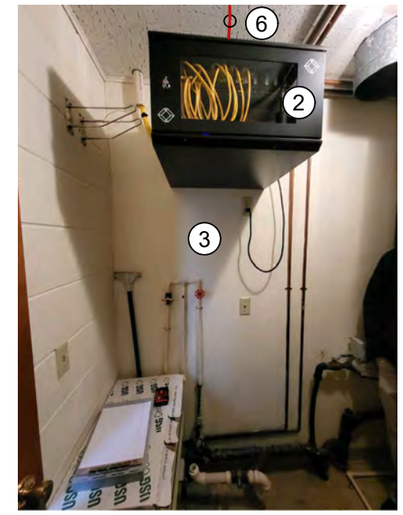

DETAIL 2
EXTERIOR ROUTE OUTSIDE HCHC TELECOM ROOM

1. NEW 2" RGS CONDUIT AND JUNCTION BOX. CORE THROUGH MASONRY WALL INTO THE IT ROOM.
2. LOCATE TERMINAL BOX. GROUND ROD TO BE PLACED PER TYPICAL ENTRANCE W/ #10 TRACER WIRE ROUTE TO END OF CABLE AND BONDED.
3. SEE SHEET 11 FOR TYPICAL BUILDING ENTRANCE INSTALLATION DETAILS AND LOCATE POINT.
4. UNDERGROUND CONNECTION TO BUILDING. PATCH GRAVEL DRIVE AND SOD TO MATCH EXISTING.

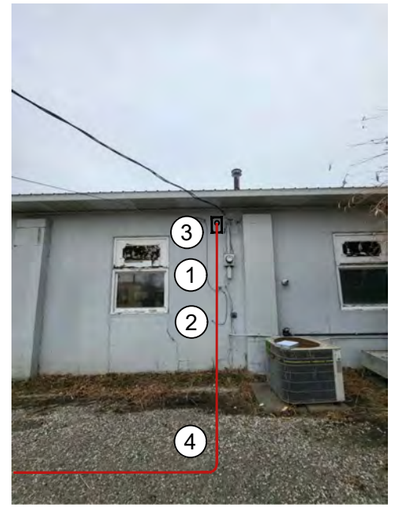

EXTERIOR ROUTE AT BUILDING

ROUTE AT BUILDING LOOKING NORTH

IOWA ONE CALL 1-800-292-8989 www.iowaonecall.com 811

HENRY COUNTY HEALTH CLINIC
NEW LONDON, IOWA

1	90% PLAN SUBMITTAL	3/23/2022
2	95% PLAN SUBMITTAL	3/28/2022
3	PERMIT PLAN SUBMITTAL	3/30/2022
4	FINAL PERMIT PLAN SUBMITTAL	4/5/2022

IOWA COMMUNICATIONS NETWORK
400 EAST 14TH STREET
GRIMES STATE OFFICE BUILDING
DES MOINES, IOWA 50319
ICN © 2021, COPY WITH PERMISSION

HENRY COUNTY
NEW LONDON TOWNSHIP
T71-N R-05W

N

0 50 100 200
GRAPHIC SCALE

1. PULL NEW LINK 1625 12 F/A THROUGH NEW 2" HDPE CONDUIT. 42" MINIMUM BELOW GRADE.
2. ICN STA. 4+15 INSTALL PROPOSED 24"x36"x36" ICN HANDHOLE - HH1. 100' SLACK COIL 12 F/A.
3. BORE UNDERNEATH THE SIDEWALKS AND STREETS. CONTRACTOR SHALL PROTECT THE EXISTING SIDEWALK AND DOCUMENT THE CONDITION PRIOR TO CONSTRUCTION.
4. VERIFY LOCATES PRIOR TO PLACEMENT OF HH. UTILITIES FOUND IN AREA.
5. OTHER UTILITY PROVIDERS IN AREA. STAY 36" CLEAR FROM ALL EXISTING UTILITIES.

ROUTE LOOKING EAST

HH1 - ICN STA. 4+15

LISTING OF HANDHOLES				
HANDHOLE	STATION	HANDHOLE	STATION	LENGTH FT
TELECOM ROOM	0+00	HH1	4+15	415
HH1	4+15	HH2	13+44	929
TOTAL				**1344**

* LENGTH DOES NOT INCLUDE SLACKCOILS

NOTE: RUNNING LINE TO BE ADJUSTED PER UTILITY LOCATES. CONTACT THE ICN AND THE CITY PRIOR TO ADJUSTING RUNNING LINE.

IOWA ONE CALL 1-800-292-8989 www.iowaonecall.com

HENRY COUNTY HEALTH CLINIC
NEW LONDON, IOWA

1	90% PLAN SUBMITTAL	3/23/2022
2	95% PLAN SUBMITTAL	3/28/2022
3	PERMIT PLAN SUBMITTAL	3/30/2022
4	FINAL PERMIT PLAN SUBMITTAL	4/5/2022

IOWA COMMUNICATIONS NETWORK
400 EAST 14TH STREET
GRIMES STATE OFFICE BUILDING
DES MOINES, IOWA 50319
ICN © 2021, COPY WITH PERMISSION

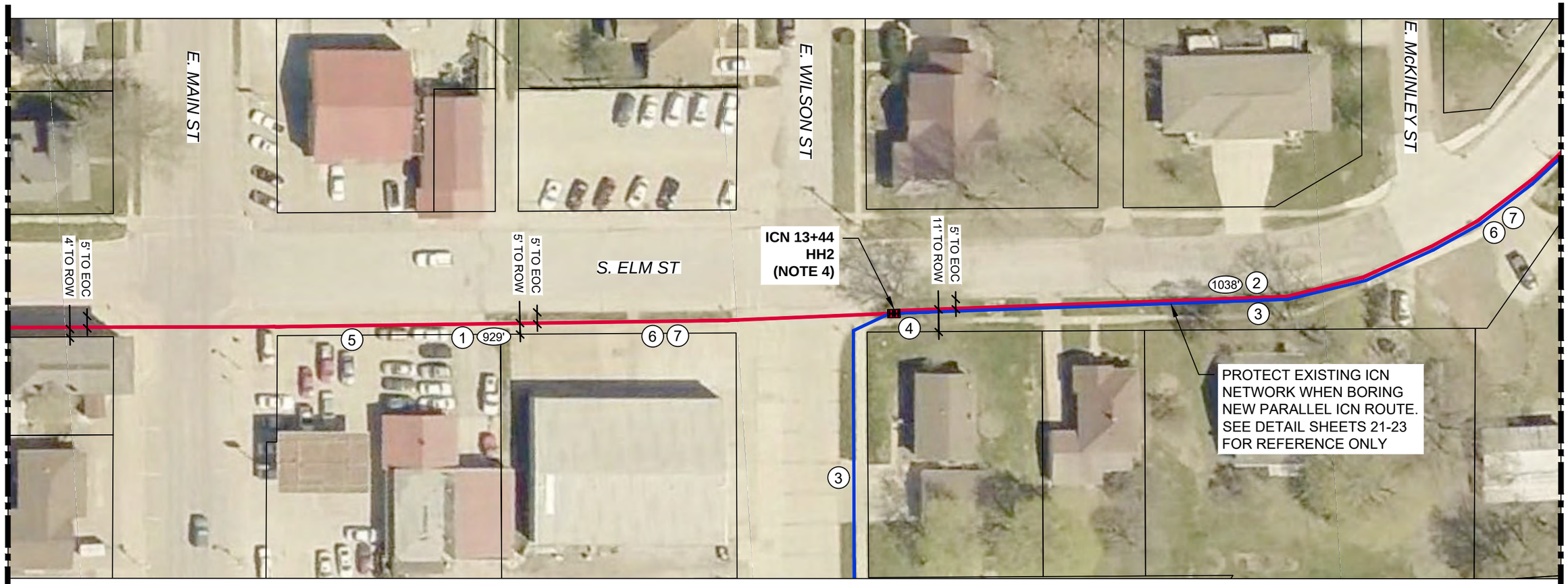

HENRY COUNTY
NEW LONDON TOWNSHIP
T71-N R-05W

0 50 100 200
GRAPHIC SCALE

1. PULL NEW LINK 1625 12 F/A THROUGH NEW 2" HDPE CONDUIT. 42" MINIMUM BELOW GRADE.

2. PULL NEW LINK 1625 12 F/A THROUGH NEW 2" HDPE CONDUIT. RUN PARALLEL TO EXISTING LINK 1605. 42" MINIMUM BELOW GRADE.

3. EXISTING LINK 1605.

4. ICN STA. 13+44 INSTALL PROPOSED 24"x36"x36" ICN HANDHOLE - HH2. 100' SLACK COIL 12 F/A. ATTEMPT TO ACCESS EXISTING CONDUIT AND ROUTE INTO HANDHOLE.

5. BORE UNDERNEATH THE SIDEWALKS AND STREETS. CONTRACTOR SHALL PROTECT THE EXISTING SIDEWALK AND DOCUMENT THE CONDITION PRIOR TO CONSTRUCTION.

6. VERIFY LOCATES PRIOR TO PLACEMENT OF HH. UTILITIES FOUND IN AREA.

7. OTHER UTILITY PROVIDERS IN AREA. STAY 36" CLEAR FROM ALL EXISTING UTILITIES.

ROUTE LOOKING SOUTH

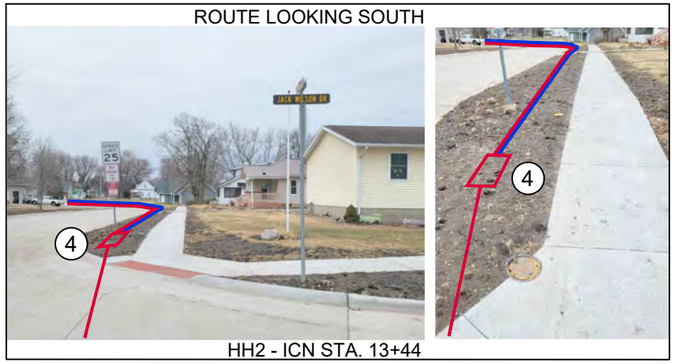

HH2 - ICN STA. 13+44

LISTING OF HANDHOLES				
HANDHOLE	STATION	HANDHOLE	STATION	LENGTH FT
HH1	4+15	HH2	13+44	929
HH2	13+44	HH3	23+82	1038
TOTAL				**1967**

* LENGTH DOES NOT INCLUDE SLACKCOILS

NOTE: RUNNING LINE TO BE ADJUSTED PER UTILITY LOCATES. CONTACT THE ICN AND THE CITY PRIOR TO ADJUSTING RUNNING LINE.

IOWA ONE CALL 1-800-292-8989 www.iowaonecall.com

HENRY COUNTY HEALTH CLINIC
NEW LONDON, IOWA

1	90% PLAN SUBMITTAL	3/23/2022
2	95% PLAN SUBMITTAL	3/28/2022
3	PERMIT PLAN SUBMITTAL	3/30/2022
4	FINAL PERMIT PLAN SUBMITTAL	4/5/2022

IOWA COMMUNICATIONS NETWORK
400 EAST 14TH STREET
GRIMES STATE OFFICE BUILDING
DES MOINES, IOWA 50319
ICN © 2021, COPY WITH PERMISSION

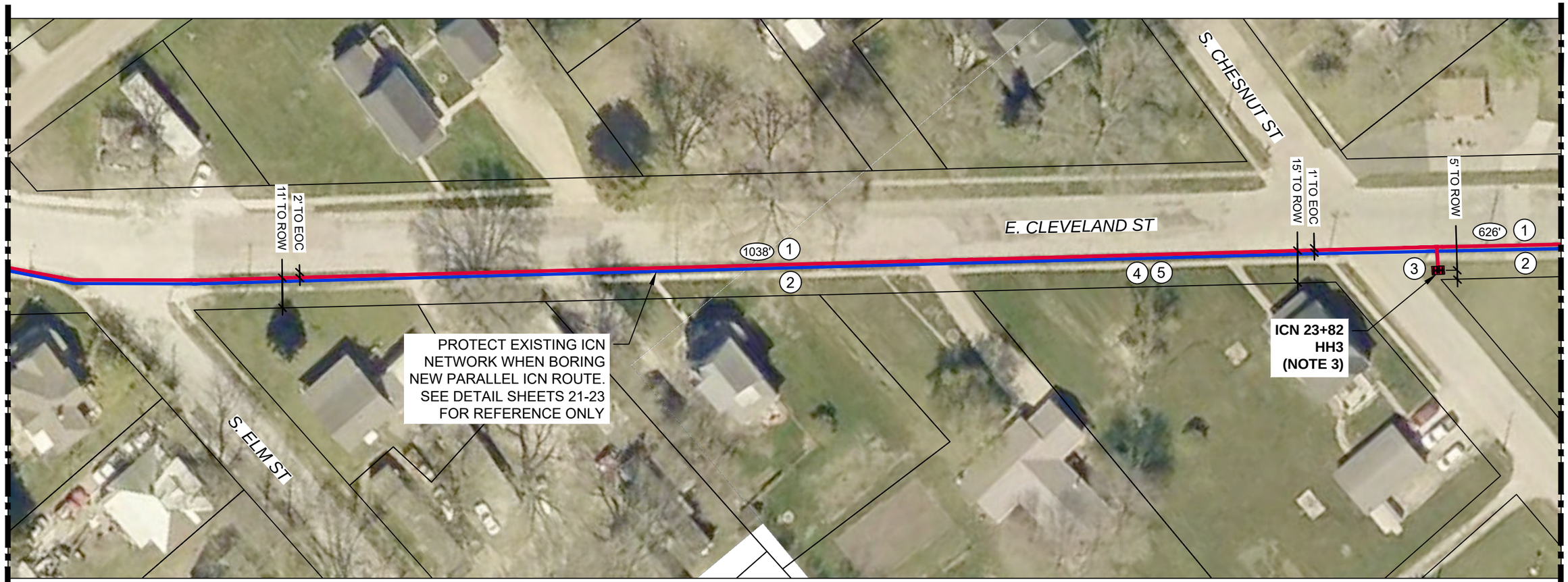

HENRY COUNTY
NEW LONDON TOWNSHIP
T71-N R-05W

0 50 100 200
GRAPHIC SCALE

1. PULL NEW LINK 1625 12 F/A THROUGH NEW 2" HDPE CONDUIT. RUN PARALLEL TO EXISTING LINK 1605. 42" MINIMUM BELOW GRADE.
2. EXISTING LINK 1605.
3. ICN STA. 23+82 INSTALL PROPOSED 24"x36"x36" ICN HANDHOLE - HH3. 100' SLACK COIL 12 F/A.
4. VERIFY LOCATES PRIOR TO PLACEMENT OF HH. UTILITIES FOUND IN AREA.
5. OTHER UTILITY PROVIDERS IN AREA. STAY 36" CLEAR FROM ALL EXISTING UTILITIES.

ROUTE LOOKING SOUTHEAST

HH3 - ICN STA. 23+82
Photo Credit: Google Streetview

LISTING OF HANDHOLES				
HANDHOLE	STATION	HANDHOLE	STATION	LENGTH FT
HH2	13+44	HH3	23+82	1038
HH3	23+82	EX. HH4	30+08	626
TOTAL				**1664**

* LENGTH DOES NOT INCLUDE SLACKCOILS

NOTE: RUNNING LINE TO BE ADJUSTED PER UTILITY LOCATES. CONTACT THE ICN AND THE CITY PRIOR TO ADJUSTING RUNNING LINE.

IOWA ONE CALL 1-800-292-8989 www.iowaonecall.com

HENRY COUNTY HEALTH CLINIC
NEW LONDON, IOWA

1	90% PLAN SUBMITTAL	3/23/2022
2	95% PLAN SUBMITTAL	3/28/2022
3	PERMIT PLAN SUBMITTAL	3/30/2022
4	FINAL PERMIT PLAN SUBMITTAL	4/5/2022

IOWA COMMUNICATIONS NETWORK
400 EAST 14TH STREET
GRIMES STATE OFFICE BUILDING
DES MOINES, IOWA 50319
ICN © 2021, COPY WITH PERMISSION

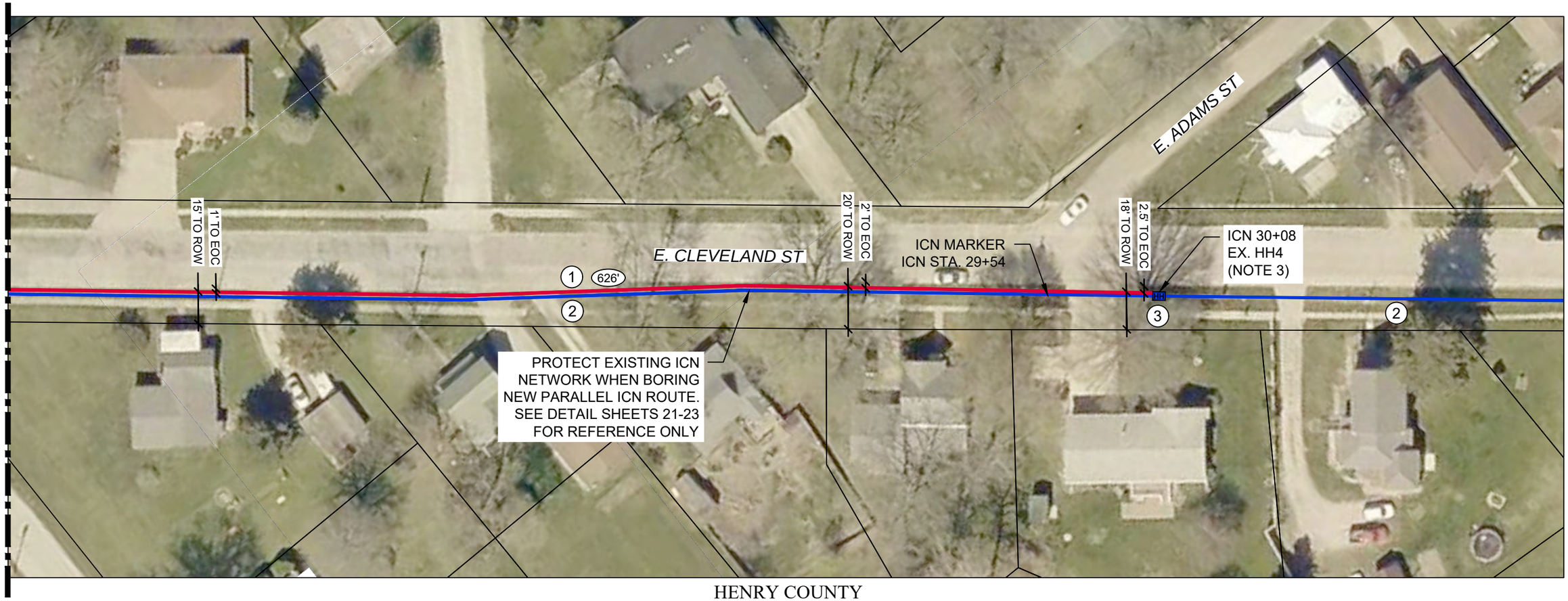

HENRY COUNTY
NEW LONDON TOWNSHIP
T71-N R-05W

0 50 100 200
GRAPHIC SCALE

1. PULL NEW LINK 1625 12 F/A THROUGH NEW 2" HDPE CONDUIT. RUN PARALLEL TO EXISTING LINK 1605. 42" MINIMUM BELOW GRADE.
2. EXISTING LINK 1605.
3. EXISTING ICN HH4 AND SPLICE CASE MS1605-Q - ICN STA. 30+08. HANDHOLE IS BURIED, BUT SHALLOW.

ROUTE LOOKING NORTHWEST

EXISTING ICN MARKER
ICN STA. 29+54

ROUTE LOOKING SOUTHEAST

EX. HH4 - ICN STA. 30+08

LISTING OF HANDHOLES				
HANDHOLE	STATION	HANDHOLE	STATION	LENGTH FT
HH3	23+82	EX. HH4	30+08	626
TOTAL				**626**

* LENGTH DOES NOT INCLUDE SLACKCOILS

NOTE: RUNNING LINE TO BE ADJUSTED PER UTILITY LOCATES. CONTACT THE ICN AND THE CITY PRIOR TO ADJUSTING RUNNING LINE.

IOWA ONE CALL 1-800-292-8989 www.iowaonecall.com

HENRY COUNTY HEALTH CLINIC
NEW LONDON, IOWA

1	90% PLAN SUBMITTAL	3/23/2022
2	95% PLAN SUBMITTAL	3/28/2022
3	PERMIT PLAN SUBMITTAL	3/30/2022
4	FINAL PERMIT PLAN SUBMITTAL	4/5/2022

IOWA COMMUNICATIONS NETWORK
400 EAST 14TH STREET
GRIMES STATE OFFICE BUILDING
DES MOINES, IOWA 50319
ICN © 2021, COPY WITH PERMISSION

TYPICAL ABOVE GROUND BUILDING ENTRANCE WITH LOCATE TERMINAL

ALTERNATIVE TO PULL BOX:
SMART PATHWAYS LB
(NOT TO SCALE)

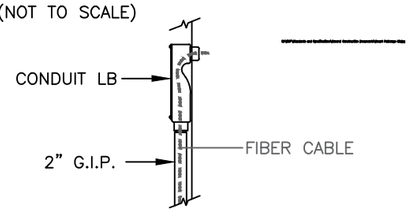

PROFILE

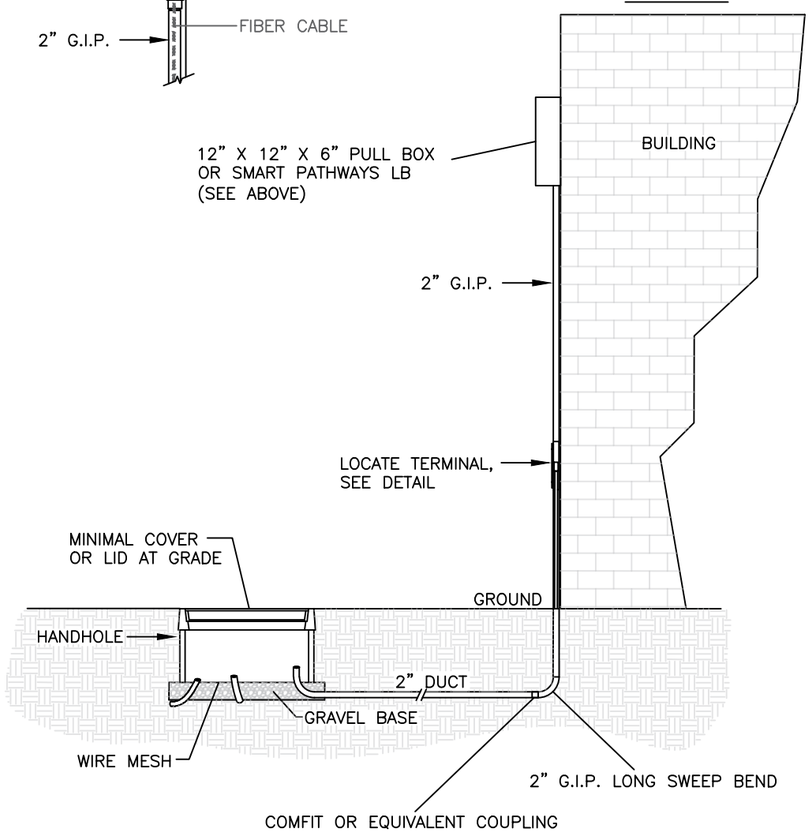

ELEVATION

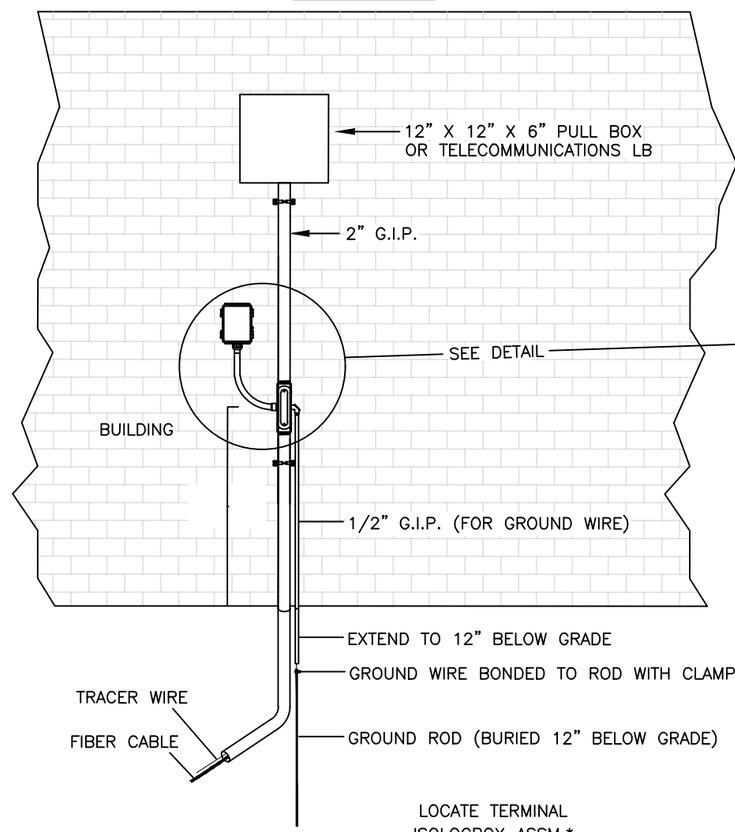

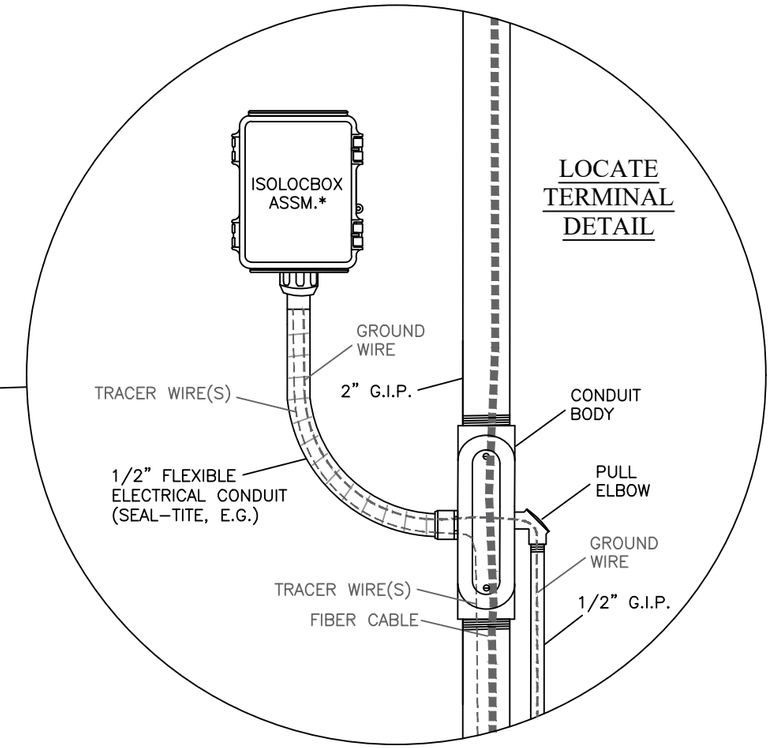

TRACER WIRE TERMINATION DETAIL

TERMINATION OF THE LOCATE WIRE AT A LOCATE PEDESTAL, LOCATE TERMINAL, OR IN A SPLICE CASE SHALL BE MADE IN THE FOLLOWING FASHION:

STRIP OFF A MINIMUM OF ¾" OF INSULATION. USING A NEEDLE NOSE PLIERS, BEND A WIRE "EYELET" ON THE WIRE END IN A CLOCKWISE MANNER. USE A FLAT WASHER ON BOTH SIDES OF THE WIRE EYELET WHEN CINCHING IT DOWN ON THE STUD. FLAT WASHERS SHALL BE OF APPROPRIATE SIZE SUCH THAT THE HOLE MATCHES THE DIAMETER OF THE STUD AND THE OUTSIDE OF DIAMETER OF THE FLAT WASHER MATCHES REASONBLY CLOSE TO THE EYELET DIAMETER.

LOCATE TERMINAL
ISOLOCBOX ASSM.*

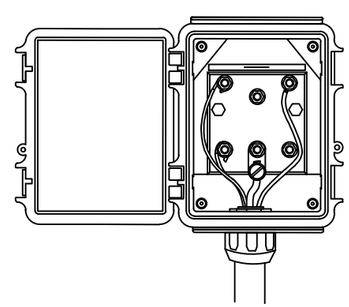

NOTES:
1. PLACE 2" G.I.P. WITH SWEEP TOWARDS NEW PULL BOX
2. (1) CORE HOLE THROUGH EXTERIOR WALL TO ACCOMMODATE 2" G.I.P.
3. PLUG ALL DUCTS WITH JACK MOON OR EQUIVALENT
4. BUILDING ENTRANCE SHALL HAVE WATER-TIGHT SEAL
5. ANCHOR 2" G.I.P. TO WALL WITH 2-HOLE STRAPS, SPACED NO MORE THAN 5-FEET APART
6. ALL COMPONENTS SHALL BE G.I.P. OR DIE CAST ALUMINUM
7. EMT AND PLASTIC ARE NOT ALLOWED
8. MOUNT LOCATE STATION A MINIMUM OF 18" ABOVE GRADE
9. SEAL ANY ACCESS HOLES DRILLED IN THE LOCATE STATION TO ROUTE WIRES WITH SILICONE
10. ALL COUPLINGS MUST ALLOW FOR BLOWING OR PULLING WITH NO OBSTRUCTION

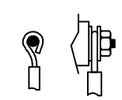

*NOTE: ISOLOCBOX ASSEMBLY INCLUDES:
BOX, ISOLEVER, PVC STAND-OFF, AND 1-FT
OF FLEXIBLE CONDUIT WITH CONNECTORS

IOWA ONE CALL
1-800-292-8989
www.iowaonecall.com

HENRY COUNTY HEALTH CLINIC
NEW LONDON, IOWA

1	90% PLAN SUBMITTAL	3/23/2022
2	95% PLAN SUBMITTAL	3/28/2022
3	PERMIT PLAN SUBMITTAL	3/30/2022
4	FINAL PERMIT PLAN SUBMITTAL	4/5/2022

IOWA COMMUNICATIONS NETWORK
400 EAST 14TH STREET
GRIMES STATE OFFICE BUILDING
DES MOINES, IOWA 50319
ICN © 2019, COPY WITH PERMISSION

TYPICAL INSTALLATION OF TRI-VIEW LOCATE PEDESTAL

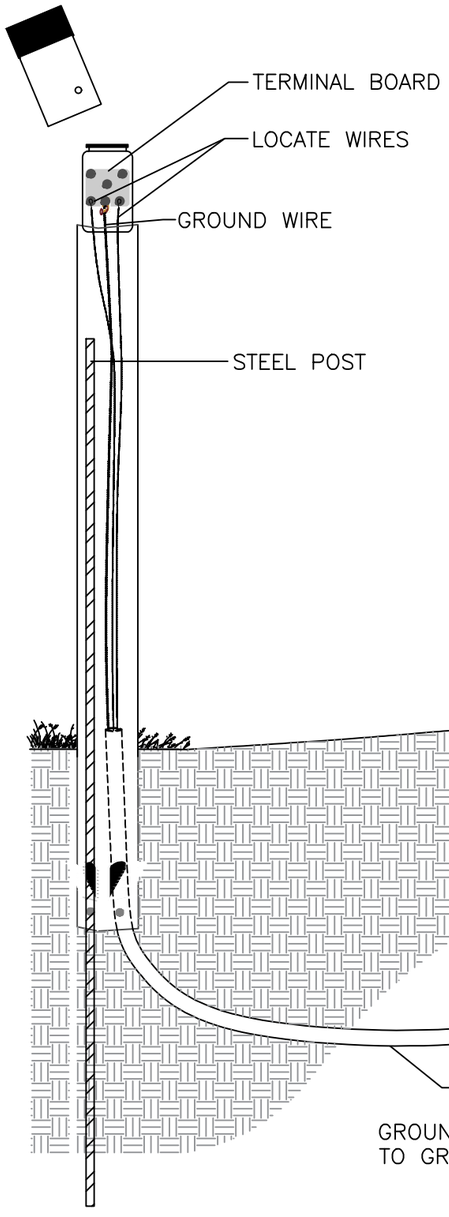

NOTES:
-LOCATE (TRACER) WIRE: #10 or #12 AWG SOLID COPPER WIRE
-GROUND WIRE: #6 OR #8 AWG SOLID BARE COPPER WIRE
-ONE LOCATE WIRE PER FIBER CABLE AT SPLICE ENCLOSURE
-LOCATE WIRE(S) TO BE BONDED INSIDE SPLICE ENCLOSURE WITH 3M SCOTCHLOK SHIELD BONDING KIT
-LOCATE WIRE(S) TO BE ROUTED OUTSIDE OF SPLICE ENCLOSURE WITH FOSC CLOSURE SEALING KIT
-LOCATE WIRE(S) TO BE ROUTED VIA DUCT TO LOCATE PEDESTAL AND TERMINATED AT TERMINAL BOARD
-GROUND LOCATE PEDESTAL TO GROUND ROD WITH SOLID BARE COPPER WIRE AND GROUND CLAMP
-SECURE LOCATE PEDESTAL BY PLACING OVER STEEL POST
-SET PEDESTAL AT OR NEAR RIGHT-OF-WAY, IF POSSIBLE
-MINIMUM HEIGHT OF INSTALLED PEDESTAL MUST BE 5 FEET

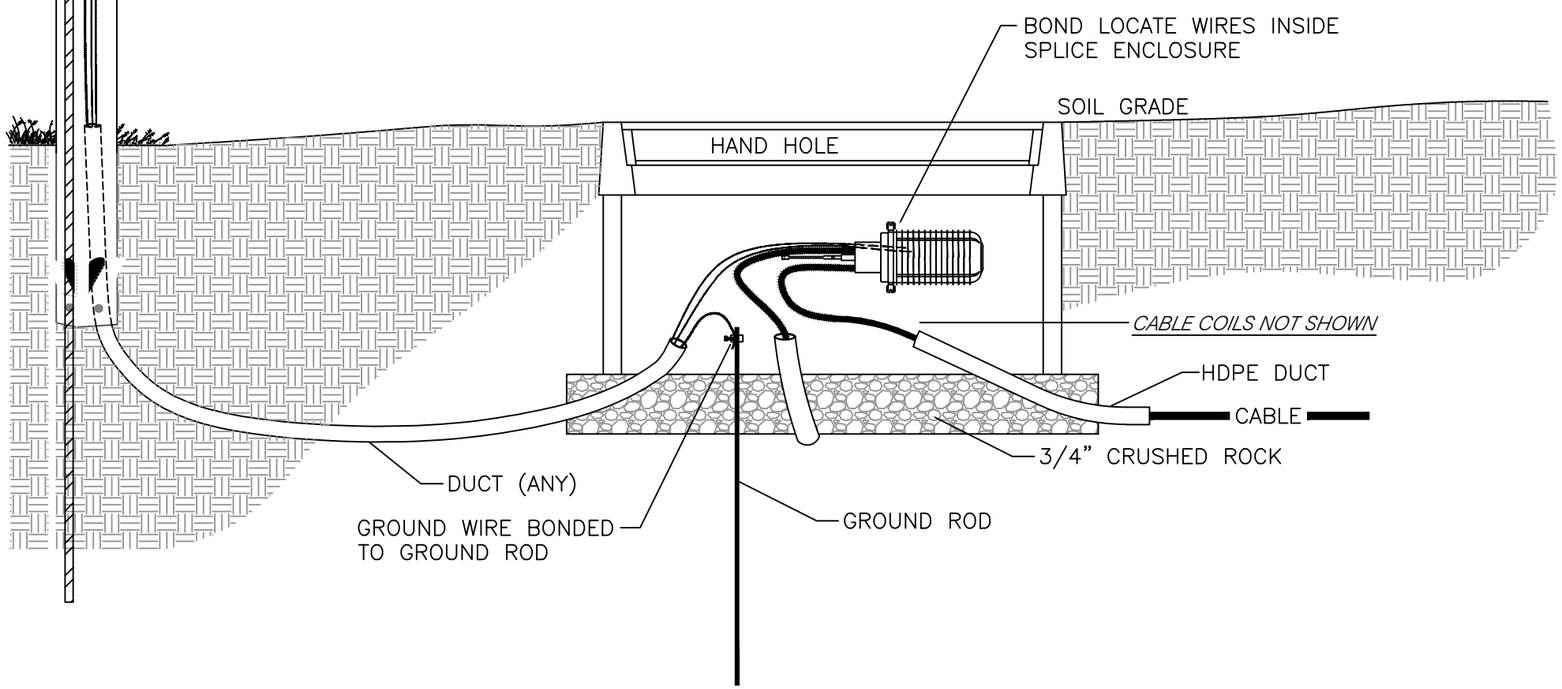

TRACER WIRE TERMINATION DETAIL

Termination of the locate wire at either a pedestal, puck, or in a splice case shall be made in the following fashion:

Strip off a minimum of ¾" of insulation. Using a needle nose pliers bend a wire "eyelet" on the wire end in a clockwise manner. Use a flat washer on both sides of the wire eyelet when cinching it down on the stud. Flat washers shall be of appropriate size such that the hole matches the diameter of the stud and the outside diameter of the flat washer matches reasonably close to the eyelet diameter.

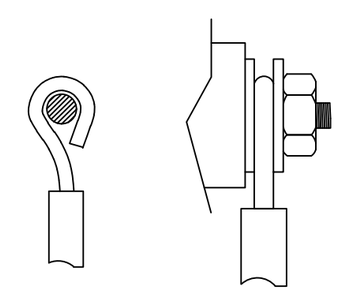

IOWA ONE CALL 1-800-292-8989 www.iowaonecall.com

HENRY COUNTY HEALTH CLINIC
NEW LONDON, IOWA

1	90% PLAN SUBMITTAL	3/23/2022
2	95% PLAN SUBMITTAL	3/28/2022
3	PERMIT PLAN SUBMITTAL	3/30/2022
4	FINAL PERMIT PLAN SUBMITTAL	4/5/2022

IOWA COMMUNICATIONS NETWORK
400 EAST 14TH STREET
GRIMES STATE OFFICE BUILDING
DES MOINES, IOWA 50319
ICN © 2019, COPY WITH PERMISSION

HANDHOLE PLACEMENT TYPICAL

24" X 36" X 30" HAND HOLE
OR
24" X 36" X 36" HAND HOLE

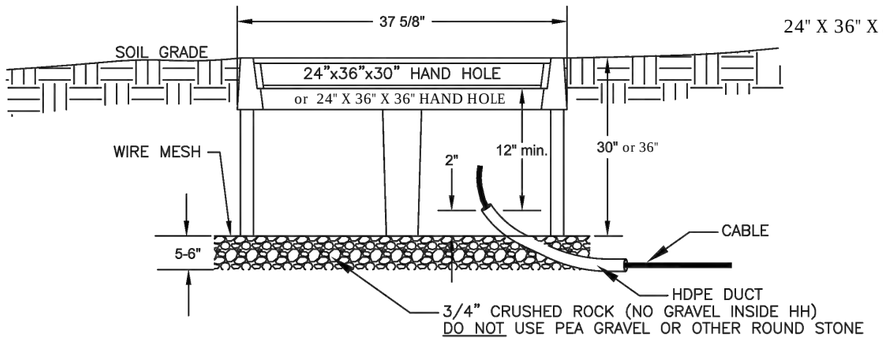

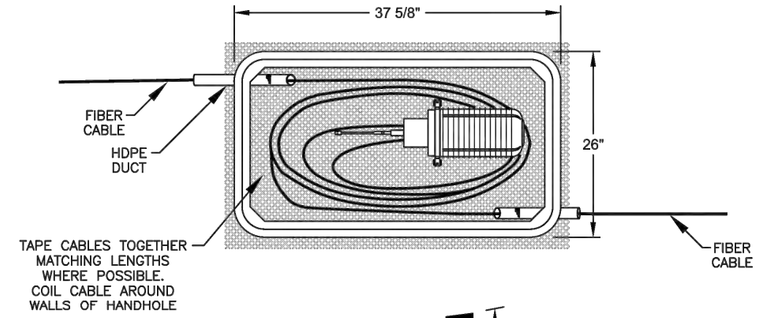

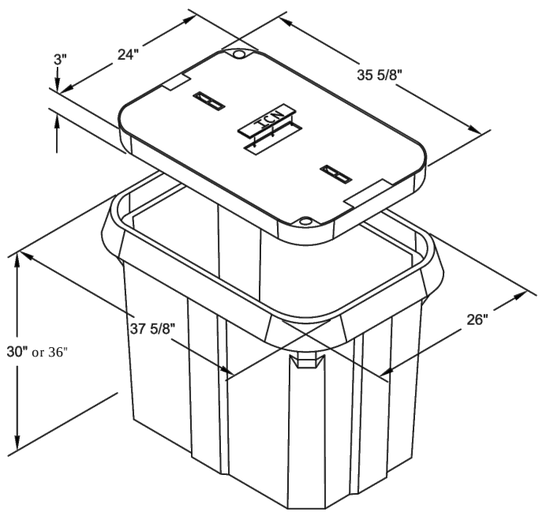

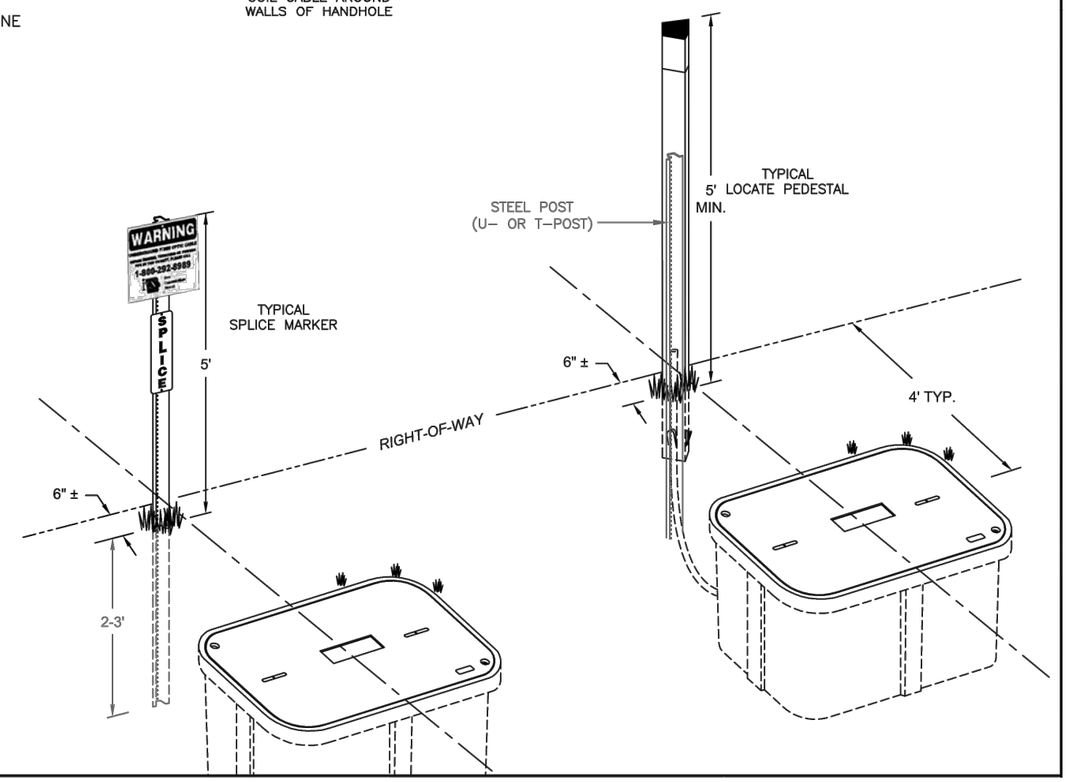

IOWA ONE CALL
1-800-292-8989
www.iowaonecall.com

HENRY COUNTY HEALTH CLINIC
NEW LONDON, IOWA

1	90% PLAN SUBMITTAL	3/23/2022
2	95% PLAN SUBMITTAL	3/28/2022
3	PERMIT PLAN SUBMITTAL	3/30/2022
4	FINAL PERMIT PLAN SUBMITTAL	4/5/2022

IOWA COMMUNICATIONS NETWORK
400 EAST 14TH STREET
GRIMES STATE OFFICE BUILDING
DES MOINES, IOWA 50319
ICN © 2019, COPY WITH PERMISSION

WARNING MARKER INSTALLATION DETAIL

METAL SIGN & U-CHANNEL POST

EACH 9" x 12" METAL WARNING SIGN SHALL BE ATTACHED AS FOLLOWS:

- TWO: 1/4-20 x 2 SS HEX HEAD BOLT
- TWO: 1/4 SS FLAT WASHER
- TWO: 1/4-20 SS NYLON INSERT LOCK NUT

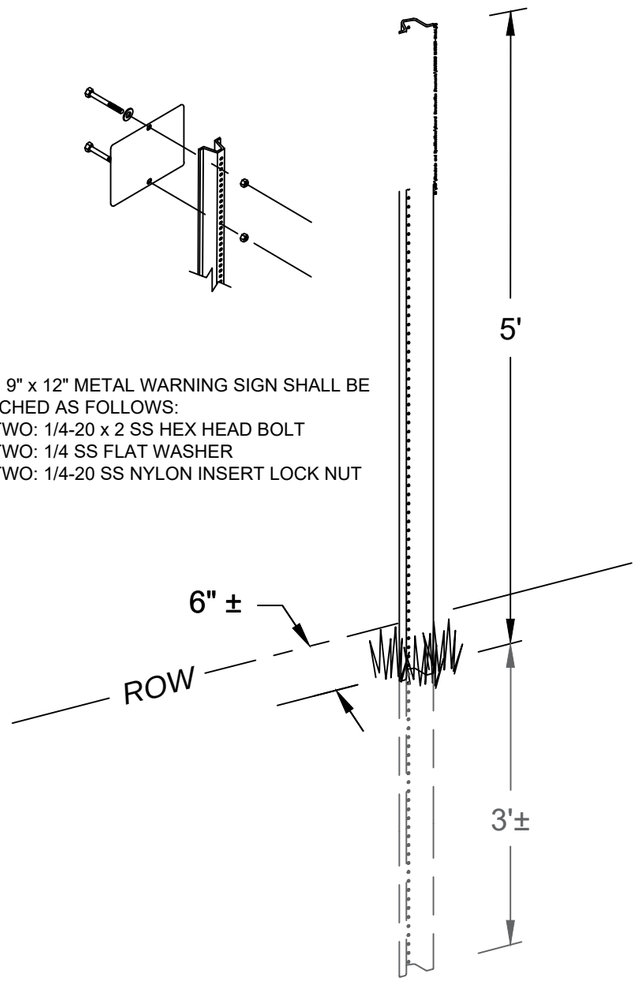

FIBERGLASS MARKER

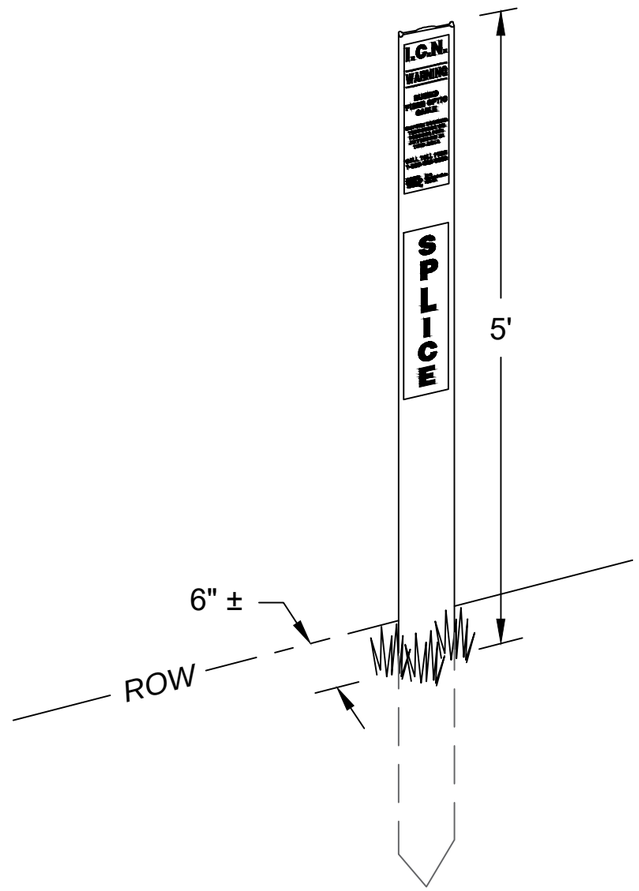

TRIVIEW MARKER

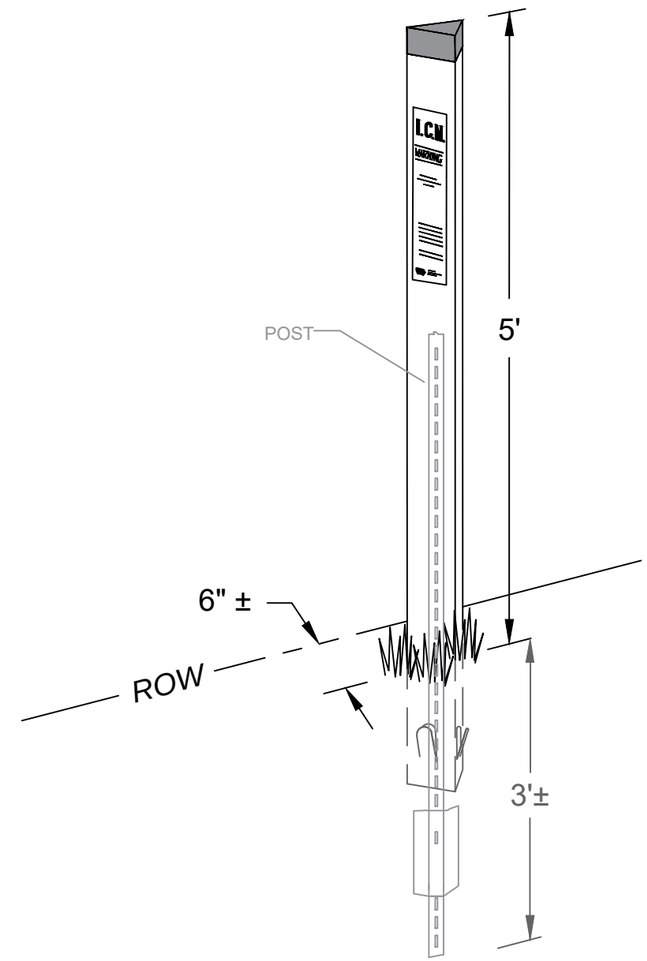

IOWA ONE CALL
1-800-292-8989
www.iowaonecall.com

HENRY COUNTY HEALTH CLINIC
NEW LONDON, IOWA

1	90% PLAN SUBMITTAL	3/23/2022
2	95% PLAN SUBMITTAL	3/28/2022
3	PERMIT PLAN SUBMITTAL	3/30/2022
4	FINAL PERMIT PLAN SUBMITTAL	4/5/2022

IOWA COMMUNICATIONS NETWORK
400 EAST 14TH STREET
GRIMES STATE OFFICE BUILDING
DES MOINES, IOWA 50319
ICN © 2019, COPY WITH PERMISSION

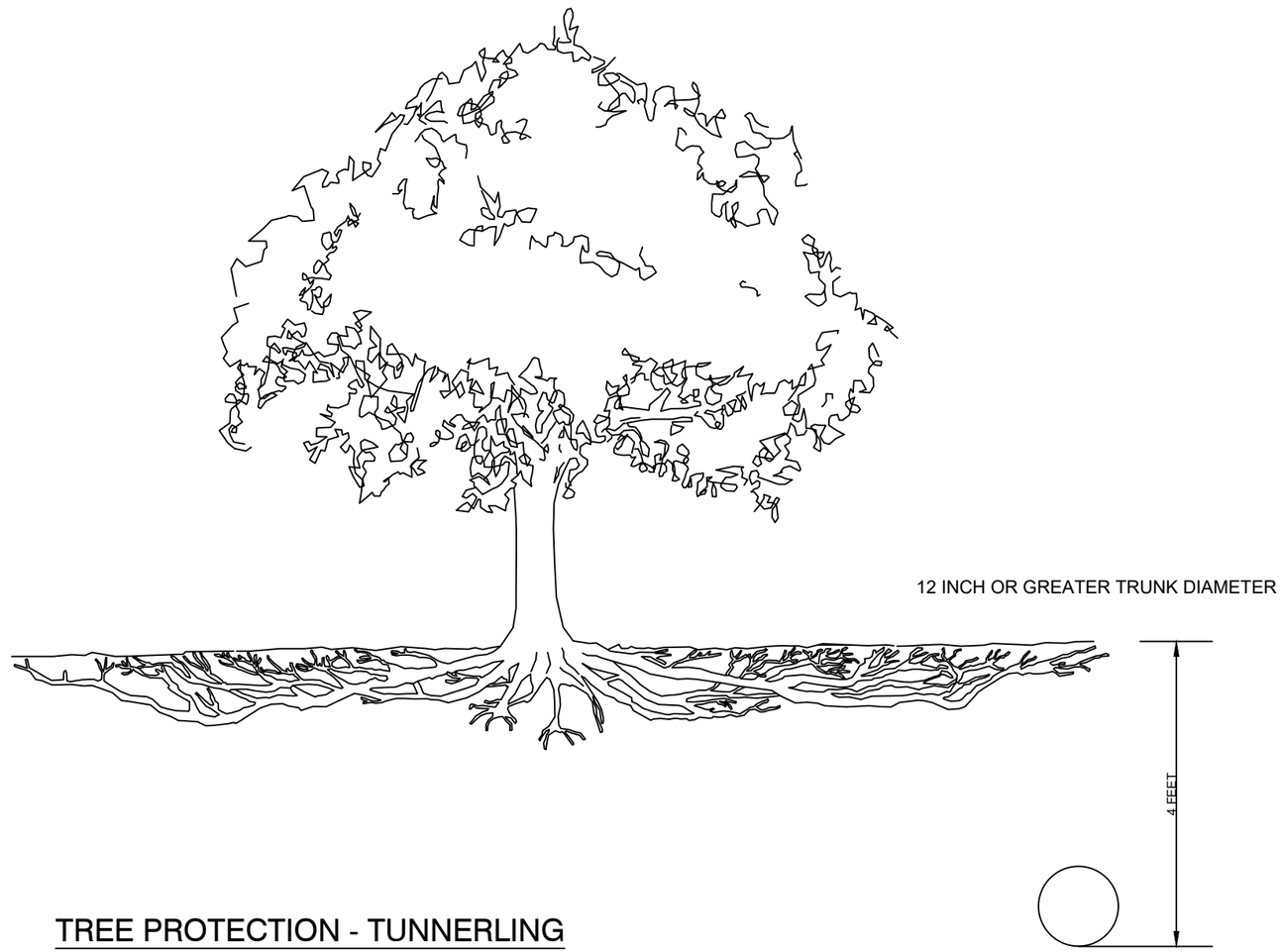

TREE PROTECTION - TUNNERLING

IOWA ONE CALL
1-800-292-8989
www.iowaonecall.com

HENRY COUNTY HEALTH CLINIC
NEW LONDON, IOWA

1	90% PLAN SUBMITTAL	3/23/2022
2	95% PLAN SUBMITTAL	3/28/2022
3	PERMIT PLAN SUBMITTAL	3/30/2022
4	FINAL PERMIT PLAN SUBMITTAL	4/5/2022

IOWA COMMUNICATIONS NETWORK
400 EAST 14TH STREET
GRIMES STATE OFFICE BUILDING
DES MOINES, IOWA 50319
ICN © 2019, COPY WITH PERMISSION

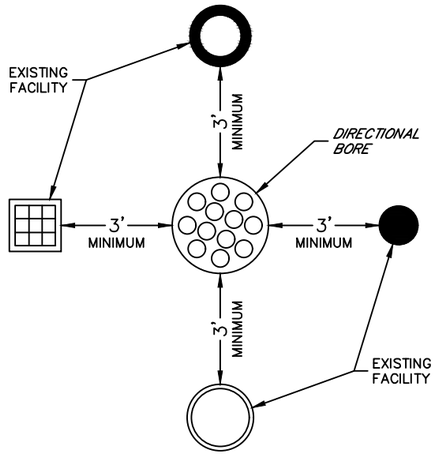

MAINTAIN A MINIMUM OF AT LEAST 3 FEET OF SEPARATION IN ANY DIRECTION BETWEEN DIRECTIONAL BORE AND ALL EXISTING FACILITIES.

UTILITY SEPARATION DETAIL

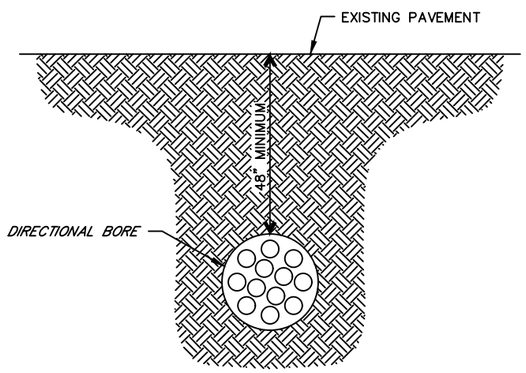

DIRECTIONAL BORING DETAIL

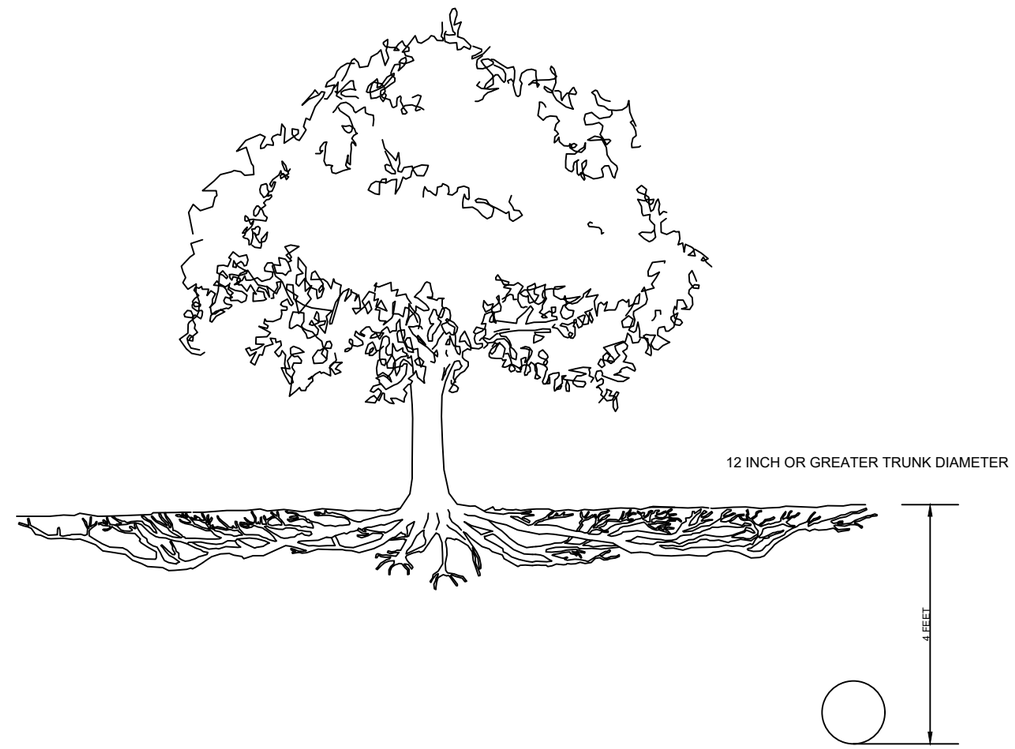

TREE PROTECTION - TUNNELING

IOWA ONE CALL
1-800-292-8989
www.iowaonecall.com

HENRY COUNTY HEALTH CLINIC
NEW LONDON, IOWA

1	90% PLAN SUBMITTAL	3/23/2022
2	95% PLAN SUBMITTAL	3/28/2022
3	PERMIT PLAN SUBMITTAL	3/30/2022
4	FINAL PERMIT PLAN SUBMITTAL	4/5/2022

IOWA COMMUNICATIONS NETWORK
400 EAST 14TH STREET
GRIMES STATE OFFICE BUILDING
DES MOINES, IOWA 50319
ICN © 2019, COPY WITH PERMISSION

Do not allow work to interfere with the flow of traffic.

When parked, locate vehicles as far from the open traffic lane as possible. Entrances and driveways should be used whenever appropriate.

Equip all vehicles with an amber revolving light or amber strobe light.

(1) For work lasting longer than one hour, refer to TC-202 or TC-402.

VEHICLE STOPPED ON SHOULDER FOR LESS THAN ONE HOUR (1)

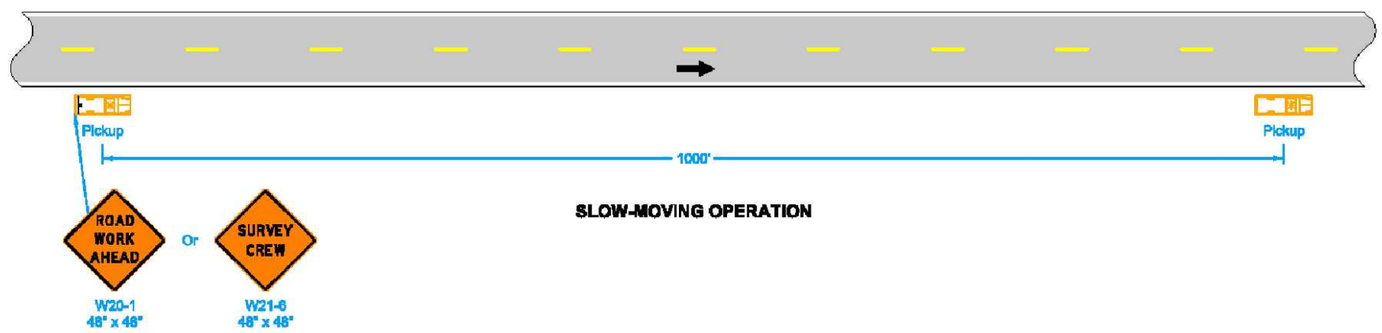

SLOW-MOVING OPERATION

LEGEND

- Traffic Sign
- Direction of Traffic

Possible Contract Item:
Traffic Control

IOWA DOT

STANDARD ROAD PLAN

REVISION	
3	10-15-19

TC-1

SHEET 1 of 1

REVISIONS: New logo.

APPROVED BY DESIGN METHODS ENGINEER

WORK NOT AFFECTING TRAFFIC (TWO-LANE OR MULTI-LANE)

IOWA ONE CALL
1-800-292-8989
www.iowaonecall.com

HENRY COUNTY HEALTH CLINIC
NEW LONDON, IOWA

hbk ICN

1	90% PLAN SUBMITTAL	3/23/2022
2	95% PLAN SUBMITTAL	3/28/2022
3	PERMIT PLAN SUBMITTAL	3/30/2022
4	FINAL PERMIT PLAN SUBMITTAL	4/5/2022

IOWA COMMUNICATIONS NETWORK
400 EAST 14TH STREET
GRIMES STATE OFFICE BUILDING
DES MOINES, IOWA 50319
ICN © 2019, COPY WITH PERMISSION

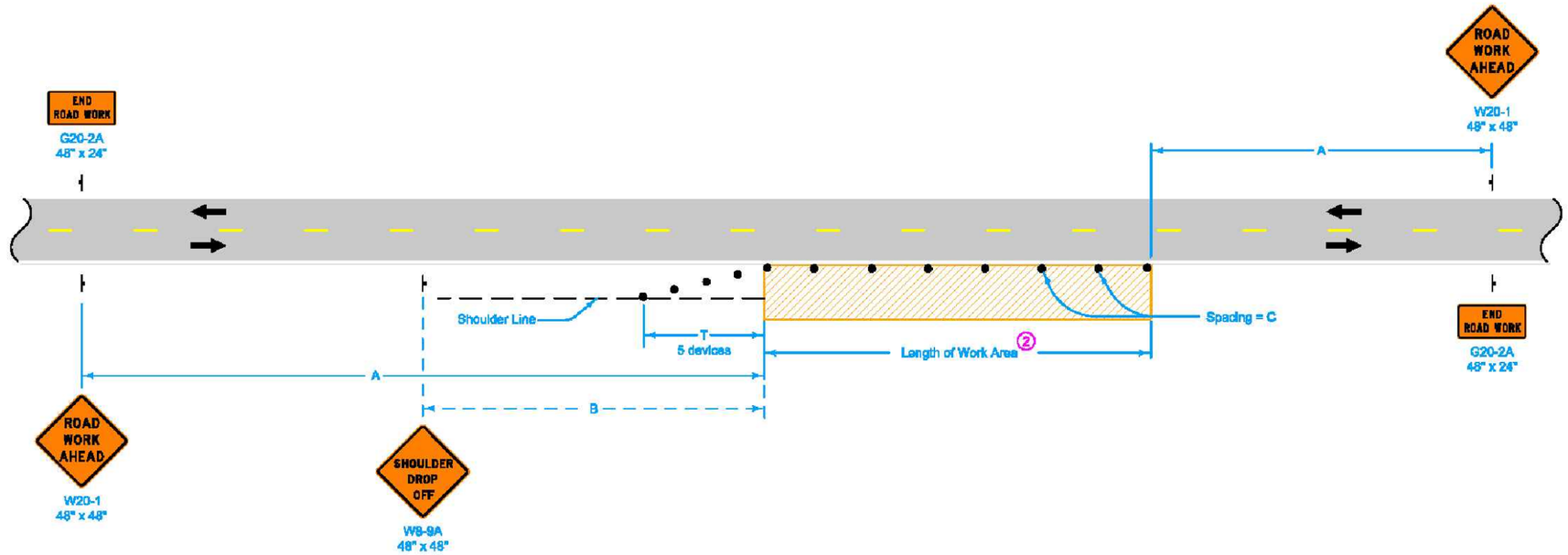

When a pavement edge drop-off exists, install a SHOULDER DROP-OFF sign.

No pavement edge drop-offs greater than pavement depth will be allowed during non-working hours.

Shoulder edge drop-offs shall be mitigated according to Article 1107.08.L2 of the Standard Specifications.

For work lasting less than one hour, refer to TC-1.

Possible Contract Item:
Traffic Control

LEGEND

- Traffic Sign
- 42" Channelizer
- Work Area
- Direction of Traffic

SPEED LIMIT (mph)	A	B	C ②	T
35 or less	500'	250'	40'	100'
40 - 45	700'	350'	80' ①	200'
50 or greater	1000'	500'	100' ①	200'

① When the length of a pavement edge drop-off is 1000 feet or less, the temporary fillet requirement of Article 1107.08 of the Standard Specifications does not apply. Reduce channelizer spacing to 40 feet.

② For work areas less than 200 feet long, use channelizers spaced at 20 foot centers or use a vehicle with an amber revolving light or amber strobe light.

IOWA DOT

STANDARD ROAD PLAN

REVISION 8 04-21-15

TC-202

SHEET 1 of 1

REVISIONS: Modified general notes, changed title and replaced the DOT logo in the title block with the new version.

Brian Smith
APPROVED BY DESIGN METHODS ENGINEER

WORK WITHIN 15 FT OF TRAVELED WAY

IOWA ONE CALL
1-800-292-8989
www.iowaonecall.com

HENRY COUNTY HEALTH CLINIC
NEW LONDON, IOWA

1	90% PLAN SUBMITTAL	3/23/2022
2	95% PLAN SUBMITTAL	3/28/2022
3	PERMIT PLAN SUBMITTAL	3/30/2022
4	FINAL PERMIT PLAN SUBMITTAL	4/5/2022

IOWA COMMUNICATIONS NETWORK
400 EAST 14TH STREET
GRIMES STATE OFFICE BUILDING
DES MOINES, IOWA 50319
ICN © 2019, COPY WITH PERMISSION

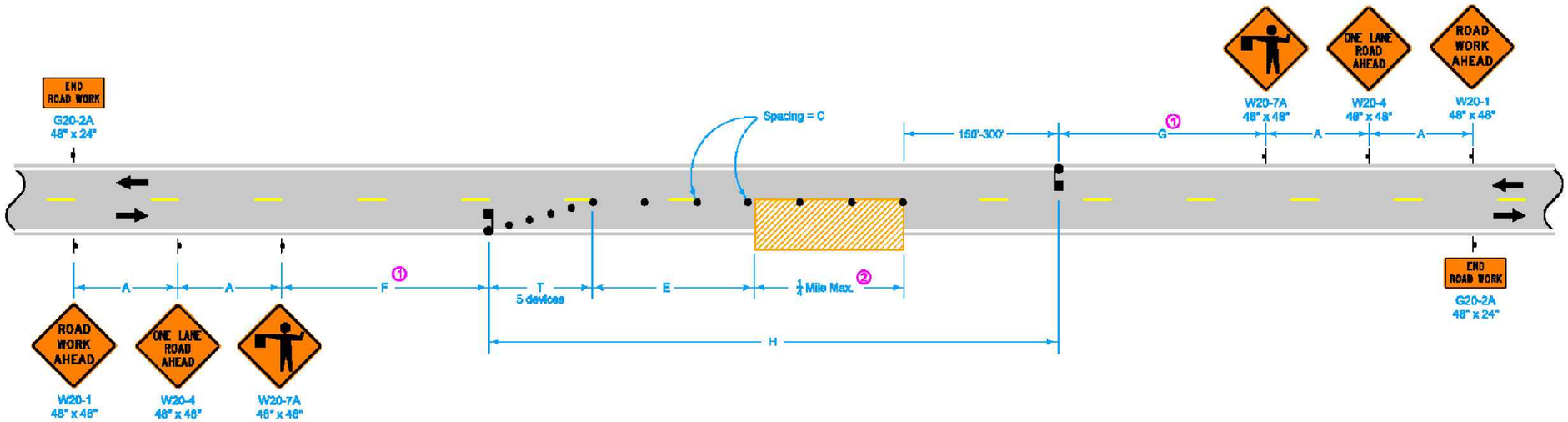

Possible Contract Items:
Flaggers
Traffic Control

LEGEND

- Traffic Sign
- Flagger
- 42" Channelizer
- Work Area
- Direction of Traffic

SPEED LIMIT (mph)	A	C	E	F and G Range ①	F + G Max.	H Max.	T
35 or less	250'	40'	0'-200'	500'-3000'	3500'	2000'	50'
40 - 45	350'	80'	0'-200'	700'-3000'	3700'	2000'	100'
50 or greater	500'	100'	200'-300'	1000'-3000'	4000'	2000'	100'

① Keep F and G distances as near to minimum values as work permits. However, to allow advancement of the work area without moving signs, F and G distances may be varied within the limits of the table. Maximum movement can be achieved by setting one F or G value at the minimum and the other value at its maximum.

② If length of work area exceeds 1/4 mile, use TC-214.

IOWA DOT

STANDARD ROAD PLAN

REVISION	
4	10-15-19

TC-213

SHEET 1 of 1

REVISIONS: New logo.

APPROVED BY DESIGN METHODS ENGINEER

LANE CLOSURE WITH FLAGGERS

IOWA ONE CALL
1-800-292-8989
www.iowaonecall.com

HENRY COUNTY HEALTH CLINIC
NEW LONDON, IOWA

1	90% PLAN SUBMITTAL	3/23/2022
2	95% PLAN SUBMITTAL	3/28/2022
3	PERMIT PLAN SUBMITTAL	3/30/2022
4	FINAL PERMIT PLAN SUBMITTAL	4/5/2022

IOWA COMMUNICATIONS NETWORK
400 EAST 14TH STREET
GRIMES STATE OFFICE BUILDING
DES MOINES, IOWA 50319

ICN © 2019, COPY WITH PERMISSION

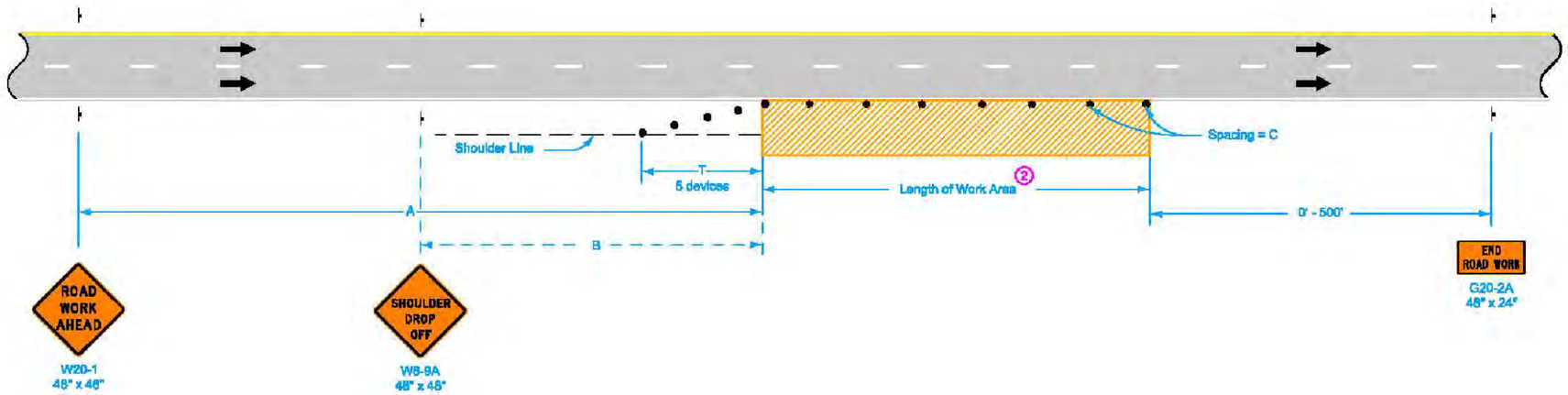

When a pavement edge drop-off exists, install a SHOULDER DROP-OFF sign.

No pavement edge drop-offs greater than pavement depth will be allowed during non-working hours.

Shoulder edge drop-offs shall be mitigated according to Article 1107.08.L2 of the Standard Specifications.

For work lasting less than one hour, refer to TC-1.

Possible Contract Item:
Traffic Control

LEGEND

- Traffic Sign
- 42" Channelizer
- Work Area
- Direction of Traffic

SPEED LIMIT (mph)	A	B	C (2)	T
40 or less	500'	250'	40'	100'
45 - 50	700'	350'	80' (1)	200'
55 - 60	1500'	500'	100' (1)	200'
65 - 70	1500'	500'	100' (1)	230'

(1) When the length of a pavement edge drop-off is 1000 feet or less, the temporary fillet requirement of Article 1107.08 of the Standard Specifications does not apply. Reduce channelizer spacing to 40 feet.

(2) For work areas less than 200 feet long, use channelizers spaced at 20 foot centers or use a vehicle with an amber revolving light or amber strobe light.

IOWA DOT

STANDARD ROAD PLAN

REVISION 8 04-21-15

TC-402

SHEET 1 of 1

REVISIONS: Modified general notes, changed title and replaced the DOT logo in the title block with the new version.

Brian Smith
APPROVED BY DESIGN METHODS ENGINEER

WORK WITHIN 15 FT OF TRAVELED WAY

IOWA ONE CALL
1-800-292-8989
www.iowaonecall.com

HENRY COUNTY HEALTH CLINIC
NEW LONDON, IOWA

1	90% PLAN SUBMITTAL	3/23/2022
2	95% PLAN SUBMITTAL	3/28/2022
3	PERMIT PLAN SUBMITTAL	3/30/2022
4	FINAL PERMIT PLAN SUBMITTAL	4/5/2022

IOWA COMMUNICATIONS NETWORK
400 EAST 14TH STREET
GRIMES STATE OFFICE BUILDING
DES MOINES, IOWA 50319
ICN © 2019, COPY WITH PERMISSION

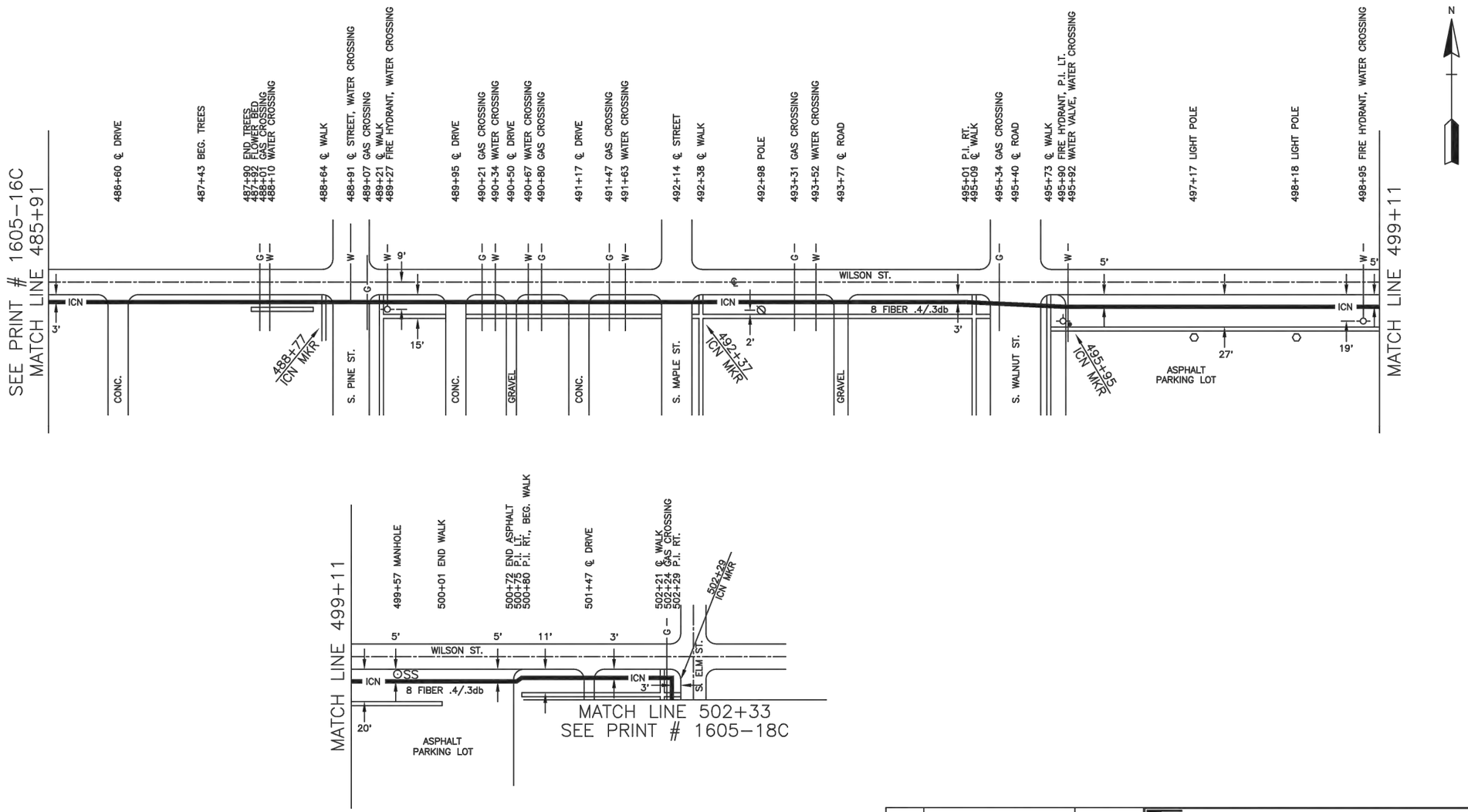

NO.	ISSUE	DATE
1	PERMIT	11-16-92
2	REVISION	1-13-93
3	BID ISSUE	1-15-93
4	CONSTRUCTION	2-12-93
5	AS-BUILT	8-17-93

Kiewit Network Technologies, Inc.
1100 Kiewit Plaza Omaha, Nebraska 68131

NOTICE
INFORMATION ON THIS DOCUMENT IS PROPRIETARY AND SHALL NOT BE USED, COPIED, REPRODUCED OR DISCLOSED IN WHOLE OR IN PART WITHOUT WRITTEN CONSENT OF KNT

TITLE IOWA COMMUNICATIONS NETWORK LINK 1605

SCALE NONE | SIZE B SIZE | DWG 1605-17C

TOLERANCE UNLESS OTHERWISE SPECIFIED

ORIGIN	DATE	DRAWN	DATE	APPVD
RC	9-22-92	CMB		

IOWA ONE CALL 1-800-292-8989 www.iowaonecall.com

HENRY COUNTY HEALTH CLINIC
NEW LONDON, IOWA

1	90% PLAN SUBMITTAL	3/23/2022
2	95% PLAN SUBMITTAL	3/28/2022
3	PERMIT PLAN SUBMITTAL	3/30/2022
4	FINAL PERMIT PLAN SUBMITTAL	4/5/2022

IOWA COMMUNICATIONS NETWORK
400 EAST 14TH STREET
GRIMES STATE OFFICE BUILDING
DES MOINES, IOWA 50319

ICN © 2019, COPY WITH PERMISSION

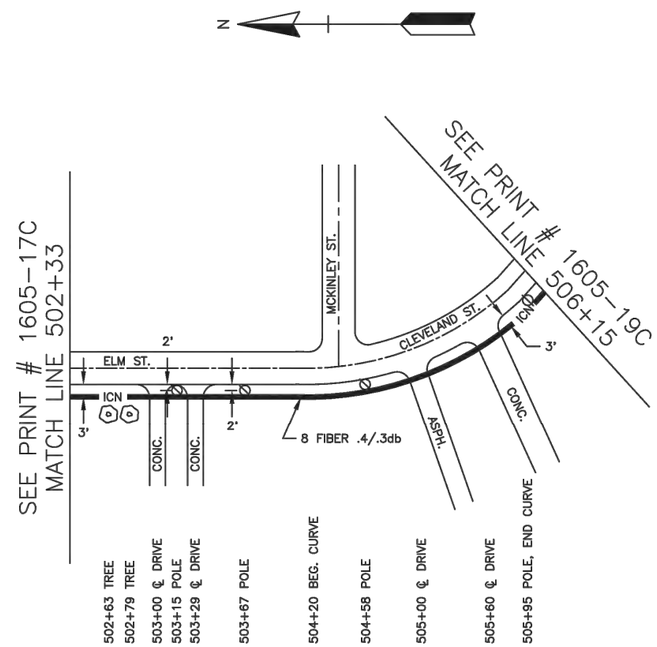

NO.	ISSUE	DATE
1	PERMIT	11-16-92
2	REVISION	1-13-93
3	BID ISSUE	1-15-93
4	CONSTRUCTION	2-12-93
5	AS-BUILT	8-17-93

Kiewit Network Technologies, Inc.
1100 Kiewit Plaza Omaha, Nebraska 68131

NOTICE
INFORMATION ON THIS DOCUMENT IS PROPRIETARY AND SHALL NOT BE USED, COPIED, REPRODUCED OR DISCLOSED IN WHOLE OR IN PART WITHOUT WRITTEN CONSENT OF KNT

TITLE IOWA COMMUNICATIONS NETWORK LINK 1605

SCALE NONE | SIZE B SIZE | DWG 1605-18C

TOLERANCE UNLESS OTHERWISE SPECIFIED

ORIGIN	DATE	DRAWN	DATE	APPVD
RC	9-22-92	CMB		

IOWA ONE CALL
1-800-292-8989
www.iowaonecall.com

HENRY COUNTY HEALTH CLINIC
NEW LONDON, IOWA

1	90% PLAN SUBMITTAL	3/23/2022
2	95% PLAN SUBMITTAL	3/28/2022
3	PERMIT PLAN SUBMITTAL	3/30/2022
4	FINAL PERMIT PLAN SUBMITTAL	4/5/2022

IOWA COMMUNICATIONS NETWORK
400 EAST 14TH STREET
GRIMES STATE OFFICE BUILDING
DES MOINES, IOWA 50319
ICN © 2019, COPY WITH PERMISSION

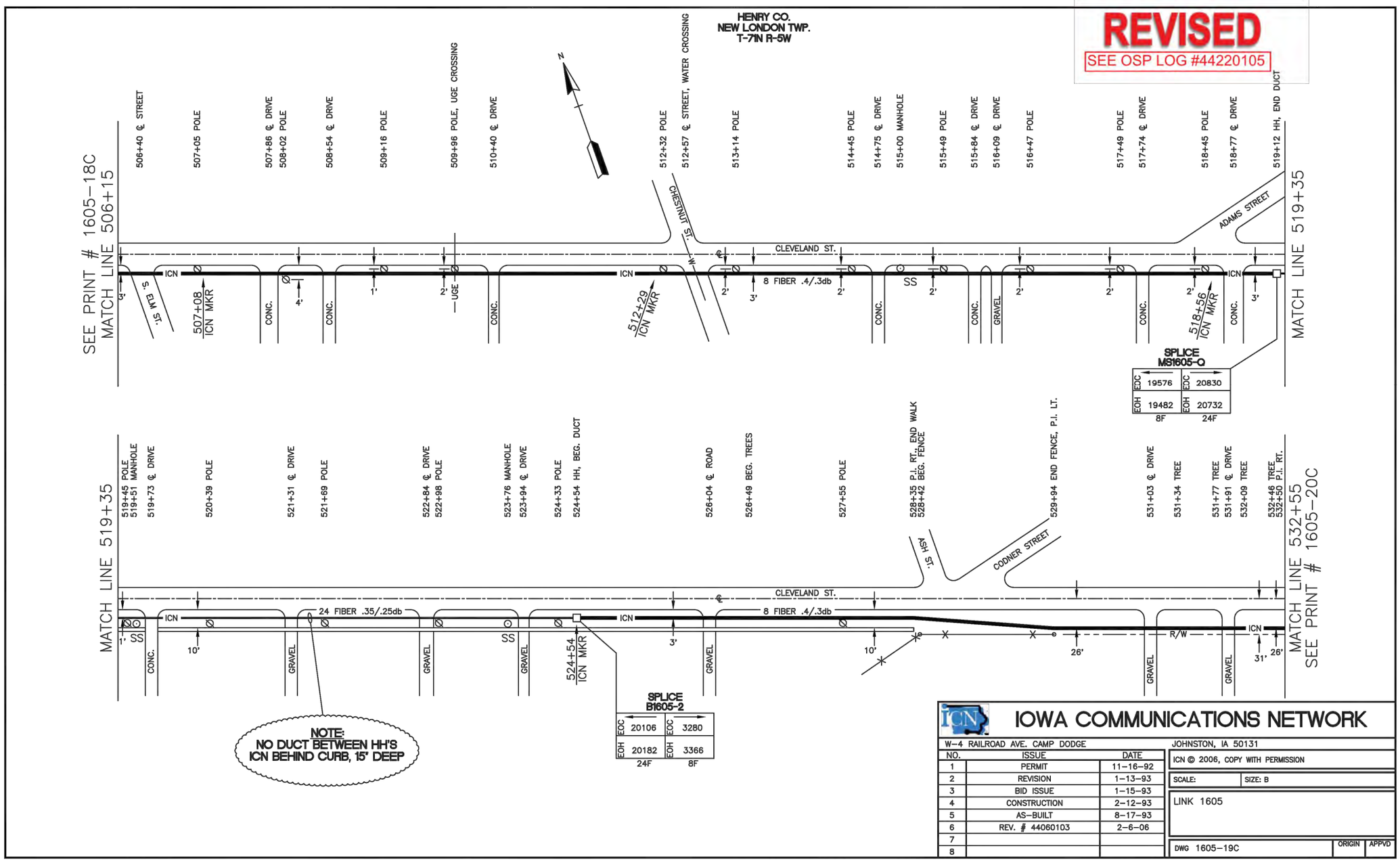

IOWA ONE CALL
1-800-292-8989
www.iowaonecall.com

HENRY COUNTY HEALTH CLINIC
NEW LONDON, IOWA

1	90% PLAN SUBMITTAL	3/23/2022
2	95% PLAN SUBMITTAL	3/28/2022
3	PERMIT PLAN SUBMITTAL	3/30/2022
4	FINAL PERMIT PLAN SUBMITTAL	4/5/2022

IOWA COMMUNICATIONS NETWORK
400 EAST 14TH STREET
GRIMES STATE OFFICE BUILDING
DES MOINES, IOWA 50319
ICN © 2019, COPY WITH PERMISSION