ADDENDUM #02

Project Name: DOC NCF Misc Door Replacements
DAS# 9523.00
RFB 952300-02
Addendum #02
Dated: October 26, 2026

This Addendum forms a part of the bidding and contract documents. This Addendum supersedes and supplements all portions of the original bidding and contract documents dated October 06, 2026 with which it conflicts.

ACKNOWLEDGE RECEIPT OF THIS ADDENDUM IN THE SPACE PROVIDED ON THE BID FORM. FAILURE TO DO SO MAY SUBJECT THE BIDDER TO DISQUALIFICATION.

1) CLARIFICATIONS

A. Frame cut out for Doors H-007 & H-003 – cut and replace existing frame leg to be verified in the field – Existing hinges to remain.

2) SPECIFICATIONS

A. None

3) DRAWINGS

A. Revised sheet A-105

1. Change showing Door H-003 to have a half-lite panel in lieu of a solid panel door.
2. Revised Door H-002 will have door frame #4 in lieu of #5.
3. Revision to Glazing key with lite sizing.

4) SUBSTITUTION REQUESTS

A. None

5) ATTACHMENTS

A. Drawings sheet A-105

END OF ADDENDUM

KEY:

GLZ: VG - VISION GLAZING | HL - HALF-LITE

FRAME & PANEL RATING: S - STANDARD | D - DETENTION

HL - Half Lite (24"x24" or nearest standard size)
VG - Vision Lite (5"x24" or nearest standard size)

DOOR SCHEDULE

ID	Quantity	View from Opening Side	DOOR W	DOOR HT	DOOR GLZ	FRAME	LEAF	FRAME & PANEL RATING	HW SET	NOTES	BID ALTERNATES
A-092	1		3'-6"	7'	VG	1	C	S	1	LEXGARD SAFETY GLAZING	BID ALTERNATE 3
H-002	1		3'	7'	HL	4	A	D	6	ARMORGARD DETENTION GLAZING	BASE BID
H-003	1		3'-6"	7'	HL	1	D	D	4	LEXGARD SAFETY GLAZING	BASE BID
H-007	1		3'	7'						REPAIR JAMB LEG ONLY	BID ALTERNATE 2
H-008B	1		3'	7'	VG	2	B	D		ARMORGARD DETENTION GLAZING	BID ALTERNATE 1
H-009	1		3'	7'	HL	3	A	S	2	LEXGARD SAFETY GLAZING	BID ALTERNATE 1
H-010	1		3'	7'	VG	2	B	D	5	ARMORGARD DETENTION GLAZING	BASE BID
K-003	1		3'	7'	HL	2	A	D	3	ARMORGARD DETENTION GLAZING	BASE BID
L-011B	1		3'-6"	7'						REPAIR JAMB LEG ONLY	BID ALTERNATE 4

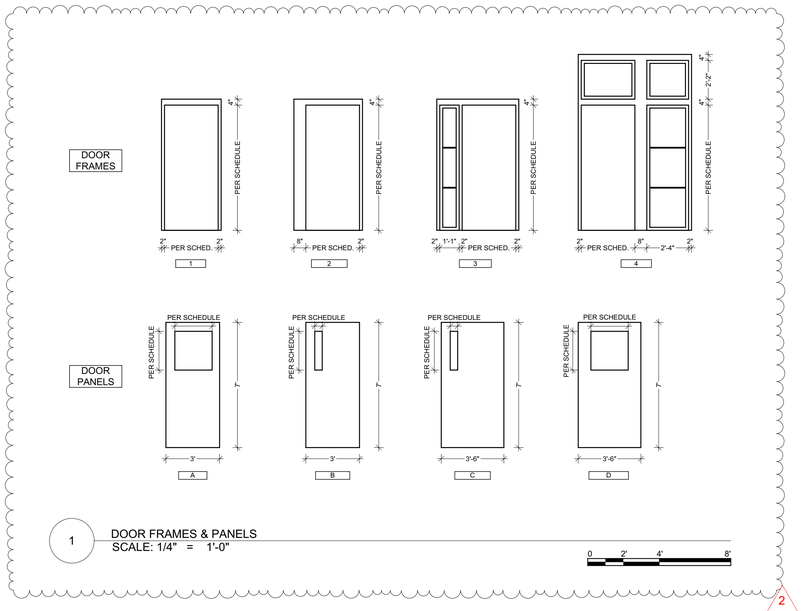

1 DOOR FRAMES & PANELS
SCALE: 1/4" = 1'-0"

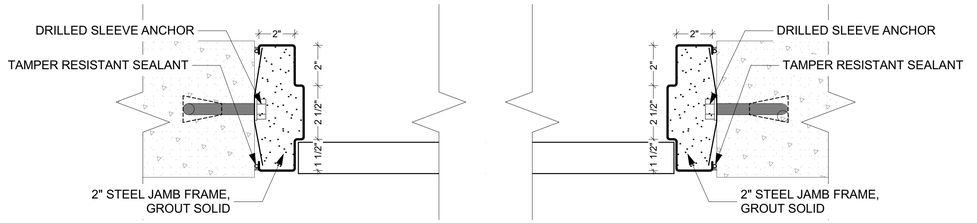

2 DOOR JAMB 1 DETAIL
SCALE: 3" = 1'-0"

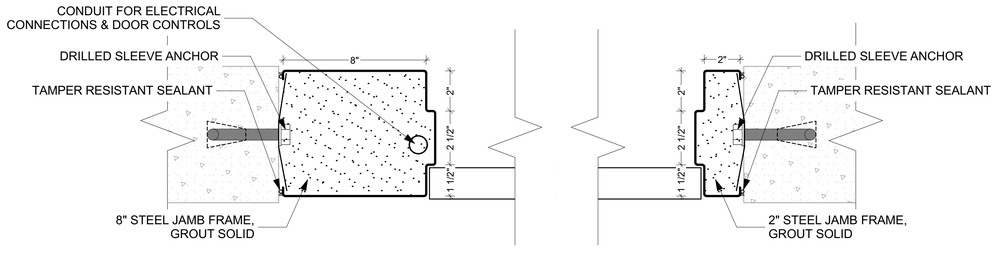

3 DOOR JAMB 2 DETAIL
SCALE: 3" = 1'-0"

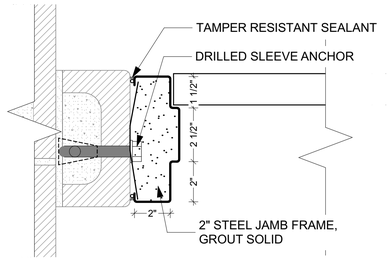

4 TYP CMU JAMB DETAIL
SCALE: 3" = 1'-0"

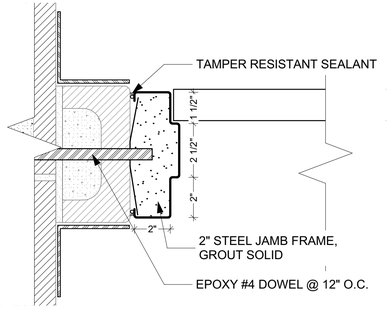

5 H-008B JAMB DETAIL (BID ALTERNATE 1)
SCALE: 3" = 1'-0"

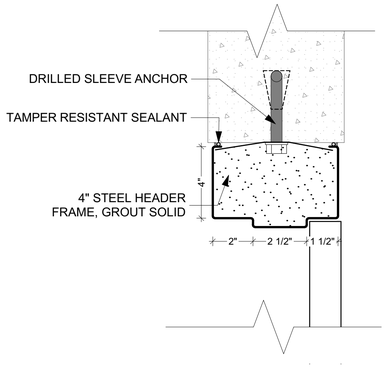

6 TYP DOOR HEADER DETAIL
SCALE: 3" = 1'-0"

ISSUED FOR BIDDING AND CONSTRUCTION

horizon. original. architecture.

9523.00 - DOC NCF Misc. Door Replacements

307 60th Avenue W Newton IA 50208

MARK	DATE	DESCRIPTION
2	10/26/2026	BIDDING ADDENDUM 2

PROJECT NO: #Pln
DATE: 10/6/2026
DRAWN BY: MSN
COPYRIGHT

SHEET TITLE

DOOR SCHEDULE & TYP DETAILS

A-105

C:\Users\BrettCherry\Horizon Architecture\Horizon Architecture - Documents\Projects\General Projects\G26-013 Newton Doors and Windows\1 - Model and Design\NCF Doors & Windows A29.pln