NOTICE: CONSTRUCTION SITE SAFETY IS THE SOLE RESPONSIBILITY OF THE CONTRACTOR. DUCKS UNLIMITED, INC. SHALL NOT ASSUME ANY RESPONSIBILITY FOR THE SAFETY OF THE WORK PERFORMED. PERSONS ENGAGED IN THE WORK, NEARBY STRUCTURES, OR OF OTHER PERSONS ON-SITE.
THE PROPERTY RIGHTS OF THE PLANS, DESIGNS, DRAWINGS, SPECIFICATIONS, DATA AND INFORMATION CONTAINED HEREIN ARE THE PROPERTY OF DUCKS UNLIMITED, INC. AND SHALL NOT BE USED OR REPRODUCED FOR ANY PURPOSE WITHOUT THE PRIOR WRITTEN CONSENT OF AN AUTHORIZED AGENT OF DUCKS UNLIMITED, INC. ANY REUSE, MODIFICATION, OR ALTERATION OF THESE PLANS, DESIGNS, DRAWINGS, SPECIFICATIONS, DATA AND INFORMATION CONTAINED HEREIN BY ANY PARTY OTHER THAN DUCKS UNLIMITED, INC. SHALL BE AT THE USER'S SOLE RISK. BY USING ANY OF THIS MATERIAL, DATA AND INFORMATION, USER AGREES THAT DUCKS UNLIMITED, INC. IS NOT RESPONSIBLE FOR THEIR USE OF THE MATERIAL, DATA AND INFORMATION OR THE RESULTS THEREOF.
IT IS A VIOLATION OF LAW FOR ANY PERSON, UNLESS THEY ARE ACTING UNDER THE DIRECTION OF A LICENSED PROFESSIONAL ENGINEER, ARCHITECT, LANDSCAPE ARCHITECT OR LAND SURVEYOR, TO ALTER THIS ITEM IN ANY WAY. IF THIS ITEM BEARS THE STAMP OF A LICENSED PROFESSIONAL ENGINEER, ARCHITECT, LANDSCAPE ARCHITECT OR LAND SURVEYOR, AND A SPECIFIC DESCRIPTION OF THE ALTERATION.
ALTERED, THE ALTERING ENGINEER, ARCHITECT, LANDSCAPE ARCHITECT OR LAND SURVEYOR SHALL STAMP THE DOCUMENT AND INCLUDE THE NOTATION 'ALTERED BY' FOLLOWED BY THEIR SIGNATURE, THE DATE OF SUCH ALTERATION, AND A SPECIFIC DESCRIPTION OF THE ALTERATION.

C:\Users\aschippers\Ducks Unlimited Incorporated\Iowa - Documents\Iowa\02_C3D Projects\IA-340-2 CREP PROJECTS\GREENE FITZPATRICK\C3D_DRAWINGS\IA-340-100 COVER & SPECS.dwg, 10/14/2026 9:49 AM, Andrew Schippers, COVER SHEET, None

DUCKS UNLIMITED

IOWA DEPARTMENT OF AGRICULTURE & LAND STEWARDSHIP

USDA

PROJECT NO. GRE853129D

GREENE COUNTY
SECTION 29, TOWNSHIP 85N, RANGE 31W
IOWA

IN COOPERATION WITH

IOWA DEPARTMENT OF AGRICULTURE & LAND STEWARDSHIP
& UNITED STATES DEPARTMENT OF AGRICULTURE
IOWA ENGINEERING JOB CLASS V





PROJECT LOCATION MAP

GRAPHIC SCALE

2000 0 1000 2000 4000 8000

1 inch = 2000 feet

SHEET INDEX	
SHEET	TITLE
C001	COVER SHEET
C002	SPECIFICATIONS, QUANTITIES, & NOTES
C051	TOPOGRAPHY & EXISTING CONDITIONS
C101	SITE PLAN
C201	EMBANKMENT PLAN & PROFILE
C202	RIPRAP & DRAW-DOWN PLAN
C203	WETLAND PROFILES
C204	TILE #1 PLAN & PROFILE
C205	TILE #2 PLAN & PROFILE
C206	TILE #3 PLAN & PROFILE
C207	TILE #4 PLAN & PROFILE
C208	TILE #5 PLAN & PROFILE
C209	TILE #6 PLAN & PROFILE
C210	TILE #7 PLAN & PROFILE
C301	SHEET PILE DETAILS
C302	CONSTRUCTION DETAILS
C303	WCS DETAIL SHEET 1
C304	WCS DETAIL SHEET 2
C305	FILTER DIAPHRAGM DETAILS
C401	SEEDING PLAN

Know what's below. Call before you dig.

UTILITIES NOTE:
BEFORE THE START OF CONSTRUCTION, THE OWNER OF ANY UTILITIES INVOLVED MUST BE NOTIFIED. THE EXCAVATOR/CONTRACTOR IS RESPONSIBLE FOR GIVING THIS NOTICE BY CALLING "IOWA ONE CALL" AT (800) 292-8989 AT LEAST 48 HOURS PRIOR TO ANY EXCAVATION.

TICKET #: _____

To the best of my professional knowledge, judgement, and belief, these plans meet applicable NRCS Standards

LICENSED PROFESSIONAL ENGINEER
ANDREW A. SCHIPPERS
P26317
IOWA

I hereby certify that this engineering document was prepared by me or under my direct personal supervision and that I am a duly licensed Professional Engineer under the laws of the State of Iowa.

Andrew Schippers — Digitally signed by Andrew Schippers Date: 2026.10.14 10:15:35 -05'00'

Andrew Schippers, P.E. Date

My license number is P26317
My license renewal date is December 31, 2027
Pages of sheets covered by this seal: 1 - 20 (C001-C401)

GREAT LAKES/ATLANTIC REGIONAL OFFICE
7322 NEWMAN BOULEVARD, BUILDING 2, STE. 200
DEXTER, MICHIGAN 48130
(734) 623-2000
www.ducks.org
DUCKS UNLIMITED

AFFIX SEAL: DUCKS UNLIMITED, INC.

ON:

COVER SHEET
PROJECT NO. GRE853129D
GREENE COUNTY
IOWA

Revision	Sheet	Revisions	Date	By
0	ALL	FINAL PLANS	2/20/2026	AS
1	ALL	IDALS REVIEW	7/16/26	AB
2	ALL	CHANNEL MODIFICATION	10-13-26	AS

CAD FILE: IA-340-100 COVER & SPECS
DESIGNED BY: AS & AB
DRAWN BY: GS & AS
SURVEYED BY: AS & AB
REVIEWER: HS
DATE: 10/13/26
PROJECT NUMBER: US-IA-340-100

C001

ESTIMATED QUANTITIES

NOTE #	BID ITEM #	SPEC #	DESCRIPTION	QUANTITY	UNIT
1	1	IA CS-001	STRIPPING	1	LS
2	2	IA CS-001	CROP DAMAGE	0	AC
3	3	IA CS-006	STRUCTURE SEEDING	1.9	AC
4	4	IA CS-006	BUFFER SEEDING	21.2	AC
5	5	CS-008	MOBILIZATION & DEMOBILIZATION	1	LS
6	6	IA CS-009	DRAINAGE TILE INVESTIGATION	1	LS
7	7	IA CS-013	STEEL SHEET PILING	1,044	SF
8	8	IA CS-021	EXCAVATION (GENERAL)	16,417	CY-P
9	9	IA CS-023	EARTHFILL (GENERAL)	271	CY-P
10	10	IA CS-023	EARTHFILL (GENERAL BERM)	884	CY-P
11	11	IA CS-023	EARTHFILL (BERM CORE)	590	CY-P
12	12	IA CS-024	DRAINFILL (SAND)	58	TN
13	13	IA CS-026	TOPSOIL PLACEMENT	8,511	CY-P
14	14	IA CS-023	SPOIL PLACEMENT	35,447	CY-P
15	15	IA CS-046	TOE DRAIN (6"Ø PERFORATED CPP)	155	LF
16	16	IA CS-046	6"Ø HDPE DUAL-WALL	221	LF
17	17	IA CS-046	8"Ø HDPE DUAL-WALL	257	LF
18	18	IA CS-046	15"Ø HDPE DUAL-WALL	181	LF
19	19	IA CS-051	ALUMINUM CMP DRAW-DOWN STRUCTURE	1	LS
20	20	IA CS-051	15"Ø ALUMINUM CMP DRAW-DOWN INLET/OUTLET	57	LF
21	21	IA CS-046, IA CS-081	STOPLOG STORAGE STRUCTURE	1	LS
22	22	IA CS-051	CMP OUTLET - 8"Ø	100	LF
23	23	IA CS-051	CMP OUTLET - 10"Ø	40	LF
24	24	IA CS-051	CMP OUTLET - 18"Ø	20	LF
25	25	IA CS-051	CMP OUTLET - 30"Ø	20	LF
26	26	IA CS-061	RIPRAP (IA DOT CLASS E)	618	TN
27	27	IA CS-062	CONCRETE GROUT	104	CY
28	28	IA CS-051	36" ALUMINUM CMP RISER INLET (AT WETLAND)	1	LS
29	29	IA CS-051	36" ALUMINUM CMP RISER INLET (AT STILLING BASIN)	1	LS

CONSTRUCTION NOTES:

1. BID ITEM FOR STRIPPING SHALL INCLUDE REMOVAL OF THE FIRST 12" OF TOPSOIL MATERIAL BELOW THE BERM, WETLAND GRADING AREA, INLET CHANNEL, SEDIMENTATION BASINS, TILE COVER AREAS, SOUTHWEST SPOIL AREA, NORTHEAST SPOIL AREA, AND ANY OTHER GRADING AREAS (ESTIMATED STRIPPING QUANTITY IS **29,286 C.Y.**). THIS MATERIAL SHALL BE STOCKPILED ON-SITE FOR RESPREAD, WHICH IS INCLUDED IN A SEPARATE BID ITEM. STRIPPING BID ITEM SHALL ALSO INCLUDE REMOVAL OF TREES/BRUSH WITHIN THE NORTHEAST SPOIL AREA TO ACCOMMODATE SPOIL MATERIAL PLACEMENT, AS DIRECTED BY ENGINEER/HOMESTEAD OWNER.
2. BID ITEM FOR CROP DAMAGE SHALL INCLUDE AREA OF CROPS DAMAGED, AS NECESSARY, IN ORDER TO COMPLETE THE WORK AS DETAILED. CONTRACTOR SHALL MINIMIZE CROP DAMAGE AS MUCH AS POSSIBLE DURING CONSTRUCTION ACTIVITIES.
3. BID ITEM FOR STRUCTURE SEEDING SHALL CONSIST OF SEEDING, MULCHING, AND FERTILIZING ALL STRUCTURES, EMBANKMENTS, CHANNEL SLOPES, AND ALL OTHER DISTURBED AREAS (OUTSIDE OF POOL AREA), AS INDICATED ON THE DRAWINGS OR OTHERWISE DESIGNATED.
4. BID ITEM FOR BUFFER SEEDING SHALL CONSIST OF SEEDING THE AREAS DESIGNATED ON THE PLANS AS BUFFER SEEDING AND INCLUDE BORROW AREAS, DISTURBED AREAS NOT SEEDED AS PART OF STRUCTURAL SEEDING, AND OTHER AREAS WITHIN THE EASEMENT.
5. BID ITEM FOR MOBILIZATION & DEMOBILIZATION SHALL INCLUDE THE SUPPLY OF ALL LABOR, MATERIAL AND EQUIPMENT TO TRANSPORT ALL NEEDED LABOR, MATERIAL AND EQUIPMENT, TO AND FROM THE PROJECT SITE, TO SUCCESSFULLY COMPLETE THE PROJECT AS SHOWN ON THE PLANS. THIS BID ITEM SHALL ALSO INCLUDE THE REMOVAL, REPLACEMENT, AND REPAIR OF ANY FENCING THAT MUST BE MODIFIED IN ORDER TO COMPLETE THIS PROJECT. THIS BID ITEM SHALL ALSO INCLUDE INSTALLING THE SIGN PROVIDED BY IDALS, AS DESCRIBED IN THE PROJECT SPECIFICATIONS. CONTRACTOR SHALL MAINTAIN ACCESS ROAD DURING CONSTRUCTION, AND RETURN ACCESS ROAD TO ORIGINAL CONDITION UPON PROJECT COMPLETION. IF MULTIPLE MOBILIZATIONS ARE REQUIRED BY THE CONTRACTOR TO COMPLETE THE WORK, ALL MOBILIZATIONS SHALL BE INCIDENTAL TO THIS BID ITEM. ANY EQUIPMENT, MATERIAL, AND LABOR REQUIRED TO ACCOMPLISH THIS SHALL BE CONSIDERED INCIDENTAL TO THIS BID ITEM.
6. BID ITEM FOR DRAINAGE TILE INVESTIGATION SHALL CONSIST OF INVESTIGATION, LOCATION, REPAIR, REMOVAL AND/OR CAPPING/PLUGGING OF SUBSURFACE DRAINS (TILE) IN WETLAND RESTORATION AREA, ENHANCEMENT, OR CREATION PROJECT AREAS, OR OTHER SITUATIONS WHERE SUBSURFACE DRAINS MAY BE PRESENT. THIS BID ITEM DOES NOT INCLUDE INSTALLATION OF NEW TILE, WHICH IS INCLUDED IN SEPARATE LINE ITEMS.
7. BID ITEM FOR STEEL SHEET PILING SHALL CONSIST OF FURNISHING AND DRIVING THE SPECIFIED SHEET PILING AT THE LOCATION SHOWN ON THE DRAWINGS. THIS BID ITEM SHALL INCLUDE SHEET PILING CAP AND ALL OTHER LABOR AND MATERIALS NECESSARY TO PROVIDE A COMPLETE INSTALLATION.
8. BID ITEM FOR EXCAVATION (GENERAL) SHALL CONSIST OF EXCAVATION AND GRADING OF MATERIAL NEEDED FOR THE BERM CORE TRENCH, ESTABLISHING POOL FINAL GRADE (GRADING AREA), SEDIMENTATION BASINS, AND INLET/OUTLET CHANNELS.
9. BID ITEM FOR EARTHFILL (GENERAL) SHALL CONSIST OF THE EARTHFILL NECESSARY TO CONSTRUCT THE SUBMERGED BERMS AND ADDITIONAL FILL TO BE PLACED OVER THE TILE TO PROVIDE ADEQUATE COVER. COHESIVE MATERIAL FOUND DURING GENERAL EXCAVATION CAN BE USED FOR THESE AREAS. SAND AND GRAVEL FOUND ON SITE SHALL NOT BE USED FOR THIS EARTHFILL.
10. BID ITEM FOR EARTHFILL (GENERAL BERM) SHALL CONSIST OF EXCAVATING, PLACING, AND COMPACTING EARTHFILL NECESSARY TO CONSTRUCT THE PORTION OF THE EMBANKMENT THAT IS NOT CONSIDERED PART OF THE EMBANKMENT CORE. COHESIVE MATERIAL FOUND DURING GENERAL EXCAVATION CAN BE USED FOR THIS AREA. SAND AND GRAVEL FOUND ON SITE SHALL NOT BE USED FOR FILL FOR THIS ITEM. IT IS ANTICIPATED THAT THIS MATERIAL WILL COME FROM EXCAVATION OF THE WETLAND POOL/CORE TRENCH.
11. BID ITEM FOR EARTHFILL (BERM CORE) SHALL CONSIST OF EXCAVATING, PLACING AND COMPACTING EARTHFILL NECESSARY TO CONSTRUCT THE PORTION OF THE EMBANKMENT DESIGNATED THE EMBANKEMENT CORE, INCLUDING THE CORE TRENCH. ESTIMATED PLAN VALUE INCLUDES 25% SHRINKAGE FACTOR. IT IS ANTICIPATED THAT THIS MATERIAL WILL COME FROM EXCAVATION OF THE WETLAND POOL/CHANNEL/CORE TRENCH. A SECONDARY BORROW LOCATION IS IDENTIFIED ON THE PLANS, IF NECESSARY.
12. BID ITEM FOR DRAINFILL (SAND) SHALL CONSIST OF FURNISHING AND PLACING DRAINFILL REQUIRED IN THE CONSTRUCTION OF STRUCTURE DRAINAGE SYSTEMS AND FILTER DIAPHRAGMS AROUND CONDUITS. THIS ITEM WILL CONSIST OF THE EXCAVATION NECESSARY TO CONSTRUCT THE TOE DRAINS, INCLUDING BACKFILL WITH MATERIAL MEETING THE REQUIREMENTS OF FINE DRAINFILL. NOTE, THIS QUANTITY INCLUDES THE SAND NEEDED FOR THE TOE DRAINS AND FILTER DIAPHRAGM. NOTE, THE CONSTRUCTION OF THE FILTER DIAPHRAGM (INCLUDING FILTER GRAVEL) IS CONSIDERED INCIDENTAL TO THE DRAW-DOWN PIPE INSTALLATION.
13. BID ITEM FOR TOPSOIL PLACEMENT SHALL CONSIST OF SPREADING SALVAGED AND STOCKPILED TOPSOIL AS THE SURFACE LAYER OF ALL EXCAVATIONS AND EARTHFILLS THAT WILL BE SEEDED. THESE LOCATIONS INCLUDE THE BERM, TILE COVER AREAS, SUBERMGED BERMS, AND SPOIL AREAS. TOPSOIL SHALL BE PLACED AS THE FINAL LIFT. AREAS TO RECEIVE A MINIMUM OF 6" LAYER OF TOPSOIL INCLUDE AREAS OF THE EMBANKMENT THAT DO NOT HAVE RIPRAP, BORROW AREA, AND ADDITIONAL FILL PLACED OVER NEW TILE.
14. BID ITEM FOR SPOIL PLACEMENT SHALL CONSIST OF SPREADING SALAVGED AND STOCKPILED TOPSOIL/EXCAVATED MATERIAL FROM THE WETLAND POOL/CHANNEL, AS SHOWN ON THE PLANS. AREAS TO RECEIVE SPOIL PLACEMENT INCLUDE THE SOUTHWEST SPOIL AREA AND THE NORTHEAST SPOIL AREA. SPOIL MATERIALS SHALL BE COMPACTED USING NRCS COMPACTION METHOD 1, EXCEPT FOR THE FINAL 6" OF TOPSOIL RESPREAD.
15. BID ITEM FOR TOE DRAIN (6"Ø PERFORATED CPP) SHALL CONSIST OF FURNISHING AND INSTALLING 6-INCH PERFORATED CORRUGATED POLYETHYLENE TUBING (SINGLE WALL) USED AS A DRAIN TILE FOR THE TOE DRAIN AS SHOWN ON THE DRAWINGS. SAND BACKFILL AROUND THE TILE SHALL BE PAID UNDER A SEPARATE BID ITEM. 20' LENGTHS OF 8"Ø GALVANIZED CMP SHALL BE UTILIZED AT THE EXPOSED OUTLETS OF THE TOE DRAIN TILE (TWO LOCATIONS). THE METAL OUTLET SHALL BE PAID UNDER A SEPARATE BID ITEM.
16. BID ITEM FOR 6"Ø HDPE DUAL-WALL SHALL CONSIST OF FURNISHING AND INSTALLING 6-INCH, NON-PERFORATED, HDPE, DUAL-WALL CORRUGATED POLYETHYLENE TUBING USED AS A DRAIN TILE AS SHOWN ON THE DRAWINGS (TILE MODIFICATION #4, #5, AND #7). MEASUREMENT AND PAYMENT FOR 6-INCH NON-PERFORATED DUAL-WALL POLYETHYLENE TUBING SHALL BE ON AN INSTALLED LINEAR FOOT BASIS, AND SHALL INCLUDE ALL NECESSARY FITTINGS AND ADAPTERS. A 20' LENGTH OF 8"Ø GALVANIZED CMP SHALL BE UTILIZED AT THE EXPOSED OUTLET OF THE TILE (THREE LOCATIONS). THE METAL OUTLET SHALL BE PAID UNDER A SEPARATE BID ITEM.
17. BID ITEM FOR 8"Ø HDPE DUAL-WALL SHALL CONSIST OF FURNISHING AND INSTALLING 8-INCH, NON-PERFORATED, HDPE, DUAL-WALL CORRUGATED POLYETHYLENE TUBING USED AS A DRAIN TILE AS SHOWN ON THE DRAWINGS (TILE MODIFICATION #3 AND #6). MEASUREMENT AND PAYMENT FOR 8-INCH NON-PERFORATED DUAL-WALL POLYETHYLENE TUBING SHALL BE ON AN INSTALLED LINEAR FOOT BASIS, AND SHALL INCLUDE ALL NECESSARY FITTINGS AND ADAPTERS. A 20' LENGTH OF 10"Ø GALVANIZED CMP SHALL BE UTILIZED AT THE EXPOSED OUTLET OF THE TILE (TWO LOCATIONS). THE METAL OUTLET SHALL BE PAID UNDER A SEPARATE BID ITEM.
18. BID ITEM FOR 15"Ø HDPE DUAL-WALL SHALL CONSIST OF FURNISHING AND INSTALLING 15-INCH, NON-PERFORATED, HDPE, DUAL-WALL CORRUGATED POLYETHYLENE TUBING USED AS A DRAIN TILE AS SHOWN ON THE DRAWINGS (TILE MODIFICATION #2). MEASUREMENT AND PAYMENT FOR 15-INCH NON-PERFORATED DUAL-WALL POLYETHYLENE TUBING SHALL BE ON AN INSTALLED LINEAR FOOT BASIS, AND SHALL INCLUDE ALL NECESSARY FITTINGS AND ADAPTERS. A 20' LENGTH OF 18"Ø GALVANIZED CMP SHALL BE UTILIZED AT THE EXPOSED OUTLET OF THE TILE (ONE LOCATION). THE METAL OUTLET SHALL BE PAID UNDER A SEPARATE BID ITEM.
19. BID ITEM FOR ALUMINUM CMP DRAW-DOWN STRUCTURE SHALL CONSIST OF PROVIDING AND INSTALLING THE ALUMINUM DRAW DOWN STRUCTURE, STOP LOGS, AND CONCRETE BASE AS SHOWN ON THE DRAWINGS AND DETAIL SHEETS.
20. BID ITEM FOR 15"Ø ALUMINUM CMP (ACP) DRAW-DOWN INLET/OUTLET SHALL CONSIST OF PROVIDING AND INSTALLING THE 15-INCH DIAMETER CMP INLET AND OUTLET PIPES AS SHOWN ON THE DRAWINGS.
21. THE BID ITEM FOR STOPLOG STORAGE BOX SHALL INCLUDE ALL LABOR AND MATERIALS TO PROVIDE THE STOPLOG STORAGE BOX, AS DETAILED IN THE PLANS. EXACT LOCATION SHALL BE DETERMINED IN THE FIELD WITH APPROVAL FROM ENGINEER.
22. BID ITEM FOR CMP OUTLET 8"Ø SHALL CONSIST OF FURNISHING AND INSTALLING THE 8"Ø CMP AND FITTINGS SHOWN ON THE PLANS FOR TILE OUTLETS, INCLUDING ANIMAL GUARD AND FLARED END SECTION AT OUTLET END OF PIPE. 8"Ø CMP OUTLETS SHALL BE PROVIDED AT TILE MODIFICATIONS #4, #5, #7, AND AT EACH TOE DRAIN END.
23. BID ITEM FOR CMP OUTLET 10"Ø SHALL CONSIST OF FURNISHING AND INSTALLING THE 10"Ø CMP AND FITTINGS SHOWN ON THE PLANS FOR TILE OUTLETS, INCLUDING ANIMAL GUARD AND FLARED END SECTION AT OUTLET END OF PIPE. 10"Ø CMP OUTLETS SHALL BE PROVIDED AT TILE MODIFICATIONS #3 AND #6.
24. BID ITEM FOR CMP OUTLET - 18"Ø SHALL CONSIST OF FURNISHING AND INSTALLING THE 18"Ø CMP AND FITTINGS SHOWN ON THE PLANS FOR TILE OUTLETS, INCLUDING ANIMAL GUARD AND FLARED END SECTION AT OUTLET END OF PIPE. 18"Ø CMP OUTLET SHALL BE PROVIDED AT TILE MODIFICATION #2.
25. BID ITEM FOR CMP OUTLET - 30"Ø SHALL CONSIST OF FURNISHING AND INSTALLING THE 30"Ø CMP AND FITTINGS SHOWN ON THE PLANS FOR TILE OUTLETS, INCLUDING ANIMAL GUARD AND FLARED END SECTION AT OUTLET END OF PIPE. 30"Ø CMP OUTLET SHALL BE PROVIDED AT TILE MODIFICATION #1.
26. BID ITEM FOR RIPRAP (IA DOT CLASS E) SHALL CONSIST OF FURNISHING AND PLACING THE ROCK RIPRAP IN THE LOCATIONS AS SHOWN ON THE DRAWINGS. ROCK SHALL BE CLASS E REVETMENT STONE AS DEFINED BY IOWA DEPARTMENT OF TRANSPORTATION. NON-WOVEN FILTER FABRIC IS REQUIRED BENEATH ALL ROCK/RIPRAP AND SHALL BE SECURED TO SLOPES AND BOTTOM, USING PINS, AS NOTED IN THE SPECIFICATIONS. QUANTITY IS BASED ON TONS. CONTRACTOR SHALL PROVIDE SCALE TICKETS WITH WEIGHTS INCLUDING TARE WEIGHTS, GROSS WEIGHTS, AND NET WEIGHTS OF MATERIAL DELIVERED.
27. BID ITEM FOR CEMENT GROUT SHALL CONSIST OF FURNISHING AND PLACING CONCRETE GROUT ON THOSE PORTIONS OF THE RIPRAP SHOWN ON THE DRAWINGS. GROUT FILL QUANTITY IS BASED ON AN APPLICATION RATE OF 0.6FT^3/FT^2 OF RIPRAP.
28. BID ITEM FOR THE 36"Ø ALUMINUM CMP RISER (AT WETLAND) SHALL CONSIST OF PROVIDING AND INSTALLING THE 36-INCH DIAMETER CMP RISER IN WETLAND AS SHOWN ON THE DRAWINGS.
29. BID ITEM FOR 36"Ø ALUMINUM CMP SLOTTED INTAKE RISER SHALL CONSIST OF PROVIDING AND INSTALLING THE 36-INCH DIAMETER CMP RISER IN STILLING BASIN AS SHOWN ON THE DRAWINGS. BID ITEM SHALL INCLUDE ALL NECESSARY PIPE EXTENSIONS AND FITTINGS REQUIRED TO TIE RISER STRUCTURE WITH EXISTING TILE. THIS INCLUDES 24 L.F. OF 24"Ø ALUMINUM CMP (ACP) FROM INTAKE RISER TO EXISTING 26"Ø TILE MAIN.
30. DEWATERING AND WATER MAINTENANCE IS THE CONTRACTOR'S RESPONSIBILITY, AND IS CONSIDERED INCIDENTAL TO THE PROJECT.

NRCS SPECIFICATIONS:

IA CS-001	SITE PREPARATION
IA CS-005	POLLUTION CONTROL
IA CS-006	SEEDING AND MULCHING FOR PROTECTIVE COVER
CS-008	MOBILIZATION & DEMOBILIZATION
IA CS-009	SUBSURFACE DRAIN INVESTIGATION, REMOVAL, AND REPAIR
IA CS-011	REMOVAL OF WATER
IA CS-013	SHEET PILING
IA CS-021	EXCAVATION
IA CS-023	EARTHFILL
IA CS-024	DRAINFILL (SAND)
IA CS-026	TOPSOILING
IA CS-031	CONCRETE
IA CS-046	TILE DRAINS FOR LAND DRAINAGE
IA CS-051	CORRUGATED METAL PIPE CONDUITS
IA CS-061	LOOSE ROCK RIPRAP
IA CS-062	CONCRETE GROUT FOR RIPRAP
IA CS-081	METAL FABRICATION AND INSTALLATION
IA CS-095	GEOTEXTILE

ADDITIONAL NOTES:

1. THE PROJECT SPECIFICATIONS ARE FROM NRCS FOR THE STATE OF IOWA ADAPTED BY IDALS/DU.
2. ALL APPLICABLE FEDERAL, STATE, AND LOCAL LAWS AND ORDINANCES WILL BE COMPLIED WITH IN THE CONSTRUCTION OF THIS PROJECT.
3. USDA, IDALS, AND DU DO NOT GUARANTEE THE WETLAND WILL FILL OR REMAIN FILLED WITH WATER TO THE PRINCIPAL CREST ELEVATION.
4. IF CULTURAL RESOURCE IS IDENTIFIED DURING CONSTRUCTION, STOP IMMEDIATELY AND NOTIFY NATURAL RESOURCES CONSERVATION SERVICE OFFICE AND DUCKS UNLIMITED FIELD REPRESENTATIVE.
5. PRODUCT DATA SHEETS SHALL BE PROVIDED FOR ALL BID ITEM MATERIALS, AS WELL AS ANY OTHER MATERIALS, AS REQUESTED BY THE ENGINEER.
6. NO ACTIVITY WILL BE AUTHORIZED WHICH JEOPARDIZES THE CONTINUED EXISTENCE OF A THREATENED OR ENDANGERED SPECIES OR A SPECIES PROPOSED FOR SUCH DESIGNATION, AS INDENTIFIED UNDER THE FEDERAL ENDANGERED SPECIES ACT, OR WILL DESTROY OR ADVERSELY MODIFY THE CRITCIAL HABITAT OF SUCH A SPECIES. THE ENGINEER WILL CONSULT WITH A QUALIFIED BIOLOGIST IF SUCH A SITUATION IS BELIEVED TO EXIST ONSITE AND A COURSE OF ACTION DETERMINED. EXISTING EAGLE NESTS WILL BE PROVIDED WITH A 660' BUFFER ZONE UNLESS OTHERWISE INDICATED BY THE NATIONAL BALD EAGLE MANAGEMENT GUIDELINES PUBLISHED BY THE US FISH AND WILDLIFE SERVICE MAY 2007.
7. TO PROTECT THREATEND/ENDANGERED BATS, TREES SHALL BE REMOVED IN ACCORDANCE WITH IOWA DOT ARTICLE 2101.10 BETWEEN **OCTOBER 1ST AND MARCH 31ST**. TREE FELLING IN THAT TIME WILL REQUIRE TREES 3" IN DIAMETER AND LARGER TO BE CUT 3 TO 4 FEET ABOVE GROUND LINE. THE CONTRACTOR SHALL LIMIT REMOVAL OF FOREST COVER TO THOSE AREAS WHICH ARE NECESSARY FOR THE CONSTRUCTION OF THE WORK AND AS DIRECTED BY THE ENGINEER.
8. IF SAND IS FOUND DURING EXCAVATION THE ENGINEER MUST BE NOTIFIED IMMEDIATELY TO DETERMINE NECESSARY REMEDIATION ACTIONS. WORK IN THE AREA WHERE SAND IS IDENTIFIED SHALL BE POSTPONED UNTIL A COURSE OF ACTION CAN BE DETERMINED.
9. ALL WORK SHALL BE COMPLETED PER NRCS SPECIFICATIONS. IF REQUIRED WORK IS NOT INCLUDED IN NRCS SPECIFICATIONS, WORK SHALL CONFORM TO THE CURRENT EDITION OF THE IOWA STATEWIDE URBAN DESIGN AND SPECIFICATIONS (SUDAS).
10. THE VOLUMES AND QUANTITIES AS PROVIDED ARE ESTIMATED FROM TOPOGRAPHIC INFORMATION, ACQUIRED FROM MULTIPLE SOURCES, USING A COMPUTER PROGRAM. PAYMENT WILL BE MADE BASED ON PLAN QUANTITIES UNLESS OTHERWISE NOTED OR ADDITIONAL EXCAVATION IS DIRECTED BY THE ENGINEER. EXCAVATION RESULTING FROM THE CONTRACTOR'S IMPROPER CONSTRUCTION OPERATIONS, SITE CONDITIONS, OR OTHERWISE, WILL NOT BE INCLUDED FOR MEASUREMENT AND PAYMENT.

GREAT LAKES/ATLANTIC REGIONAL OFFICE
7322 NEWMAN BOULEVARD, BUILDING 2, STE. 200
DEXTER, MICHIGAN 48130
(734) 623-2000
www.ducks.org
DUCKS UNLIMITED

AFFIX SEAL: DUCKS UNLIMITED, INC.

ON:

SPECIFICATIONS, QUANTITIES, & NOTES
PROJECT NO. GRE853129D
GREENE COUNTY
IOWA

Revision	Sheet	Revisions	Date	By
0	ALL	FINAL PLANS	2/20/2026	AS
1	ALL	IDALS REVIEW	7/16/26	AB
2	ALL	CHANNEL MODIFICATION	10-13-26	AS

CAD FILE: IA-340-100 COVER & SPECS

DESIGNED BY: AS & AB

DRAWN BY: GS & AS

SURVEYED BY: AS & AB

REVIEWER: HS

DATE: 10/13/26

PROJECT NUMBER: US-IA-340-100

C002

NOTICE: CONSTRUCTION SITE SAFETY IS THE SOLE RESPONSIBILITY OF THE CONTRACTOR; DUCKS UNLIMITED, INC., SHALL NOT ASSUME ANY RESPONSIBILITY FOR THE SAFETY OF THE WORK PERFORMED, PERSONS ENGAGED IN THE WORK, NEARBY STRUCTURES, OR OF OTHER PERSONS ON-SITE. THESE PLANS AND SPECIFICATIONS ARE THE PROPERTY OF DUCKS UNLIMITED, INC. AND SHALL NOT BE USED OR REPRODUCED FOR ANY PURPOSE WITHOUT THE PRIOR WRITTEN CONSENT OF AN AUTHORIZED AGENT OF DUCKS UNLIMITED, INC. ANY AND ALL UNAUTHORIZED USE OF THESE PLANS AND SPECIFICATIONS WILL BE AT THE SOLE RISK OF THE USER AND WITHOUT LIABILITY TO DUCKS UNLIMITED, INC. THE USER AGREES TO INDEMNIFY AND HOLD HARMLESS DUCKS UNLIMITED, INC. FROM ALL CLAIMS, DAMAGES, LOSSES, AND EXPENSES INCLUDING ATTORNEY'S FEES ARISING OUT OF OR RESULTING THEREFROM. ANY MODIFICATION OF THESE PLANS AND SPECIFICATIONS WILL BE AT THE USER'S SOLE RISK. BY USING ANY OF THIS MATERIAL, DATA AND INFORMATION, USER AGREES THAT DUCKS UNLIMITED, INC. IS NOT RESPONSIBLE FOR THEIR USE OF THE MATERIAL, DATA AND INFORMATION OR THE RESULTS THEREOF. ANY ALTERATION OF THESE PLANS AND SPECIFICATIONS BY ANY PERSON OTHER THAN A LICENSED PROFESSIONAL IS IN VIOLATION OF THE LAW AND WILL RELIEVE DUCKS UNLIMITED, INC. OF ANY AND ALL RESPONSIBILITY FOR THE PLANS AND SPECIFICATIONS. IF ANY PERSON ALTERS THESE PLANS AND SPECIFICATIONS, HE/SHE SHALL ATTACH TO THE DOCUMENT A LICENSED PROFESSIONAL'S SEAL, SIGNATURE, AND DATE OF SUCH ALTERATION, AND A SPECIFIC DESCRIPTION OF THE ALTERATION.

C:\Users\aschippers\Ducks Unlimited Incorporated\Iowa Documents\Iowa\02_C3D Projects\IA-340-2 CKEP PROJECTS\GREENE FTZ\PATRICK\C3D_DRAWINGS\IA-340-100 COVER & SPECS.dwg, 10/14/2026 9:49 AM, Andrew Schippers, SPECIFICATIONS QUANTITIES & NOTES, None

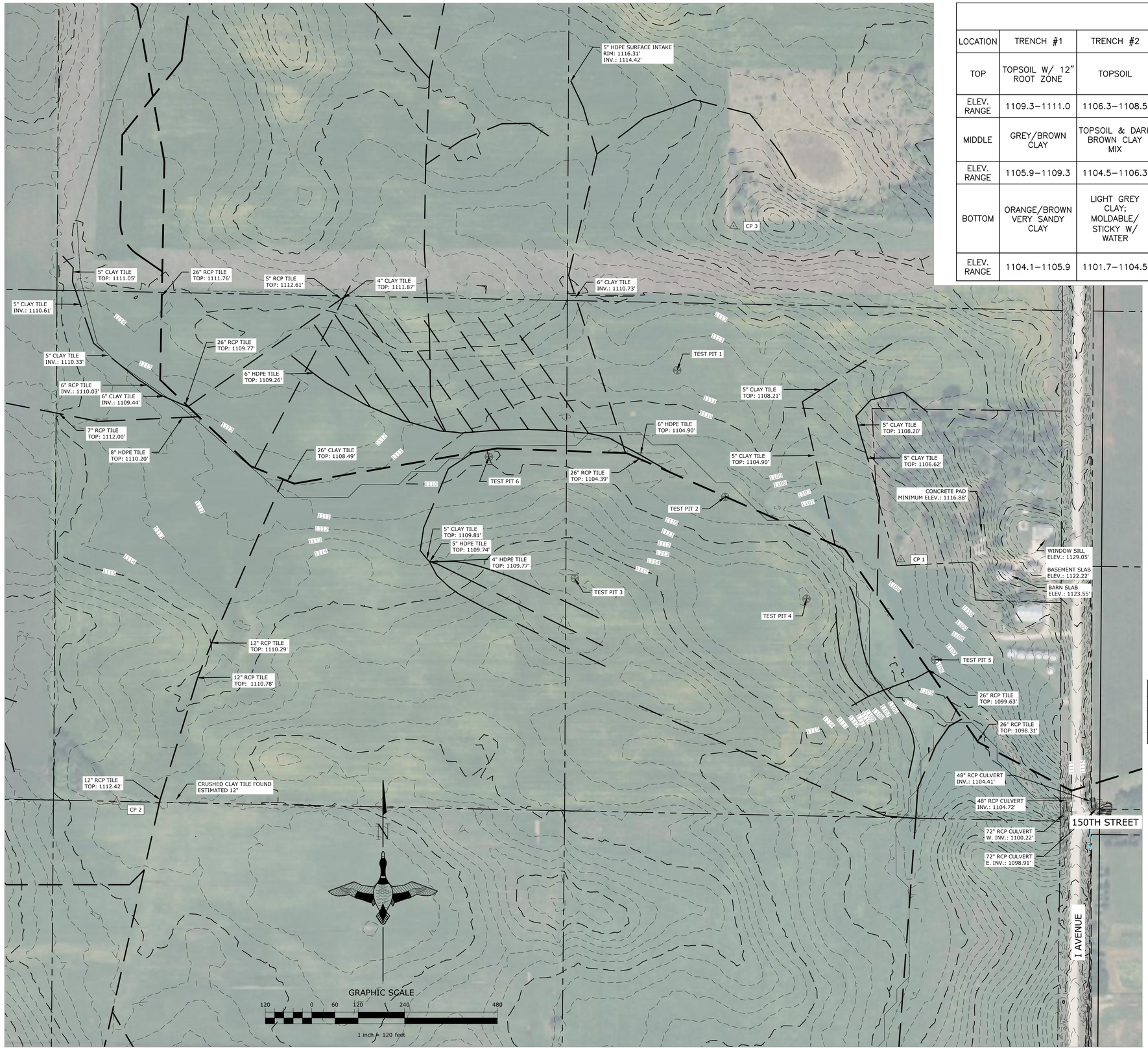

TEST PIT SOIL DATA						
LOCATION	TRENCH #1	TRENCH #2	TRENCH #3	TRENCH #4	TRENCH #5	TRENCH #6
TOP	TOPSOIL W/ 12" ROOT ZONE	TOPSOIL	TOPSOIL W/ 12" ROOT ZONE	TOPSOIL W/ 6" ROOT ZONE	TOPSOIL W/ 12" ROOT ZONE	12" – 16" TOPSOIL
ELEV. RANGE	1109.3–1111.0	1106.3–1108.5	1116.9–1117.8	1112.5–1113.3	1102.7–1105.8	1108.5–1109.8
MIDDLE	GREY/BROWN CLAY	TOPSOIL & DARK BROWN CLAY MIX	LIGHT BROWN TRANSITION	LIGHT BROWN TRANSITION	TAN CLAY MIX	TOPSOIL & DARK BROWN CLAY MIX
ELEV. RANGE	1105.9–1109.3	1104.5–1106.3	1115.3–1116.9	1111.7–1112.5	1100.9–1102.7	1105.6–1108.5
BOTTOM	ORANGE/BROWN VERY SANDY CLAY	LIGHT GREY CLAY; MOLDABLE/ STICKY W/ WATER	LIGHT BROWN SANDY MIX; SOME CLAY/SILT; BREAKS APART/ NOT VERY COHESIVE	LIGHT BROWN SANDY MIX; SOME CLAY/SILT; BREAKS APART/ NOT VERY COHESIVE	LIGHT BROWN CLAY/SAND MIX	LIGHT GREY CLAY; MOLDABLE/ STICKY W/ WATER
ELEV. RANGE	1104.1–1105.9	1101.7–1104.5	1111.2–1115.3	1106.2–1111.7	1098.8–1100.9	1103.4–1105.6

LEGEND

- DIKE
- CHANNEL
- DITCH
- MAJOR CONTOUR
- MINOR CONTOUR
- APPROXIMATE WATERLINE
- OHe OVERHEAD ELECTRIC
- EDGE OF RIP-RAP
- EDGE OF PAVEMENT
- EDGE OF GRAVEL
- ROAD OR TRAIL
- X FENCE LINE
- APPROXIMATE PROPERTY LINE
- ROW APPROXIMATE RIGHT-OF-WAY LINE
- EDGE OF WETLAND
- SPOT ELEVATION
- HORIZONTAL & VERTICAL CONTROL
- BENCHMARK
- SB 1 SOIL BORING
- WATER CONTROL STRUCTURE
- FOUND PROPERTY CORNER
- CATCH BASIN
- MH MANHOLE

October 2, 2024

US-IA-340-100, Greene County - Fitzpatrick

HORIZONTAL CONTROL
Coordinates are NAD 83 (2011), Iowa State Plane North Zone 1402, and units of measurement are in U.S. Survey Feet. Raw data was collected for 4.5 hours on December 05, 2023 using a Trimble R12 GPS base receiver. Coordinates were initially established from an autonomous survey and post processed with the NGS OPUS (National Geodetic Survey, Online Positioning User Service) solution for the occupied Control Point 1.

VERTICAL CONTROL
Elevations were established ffrom an autonomous survey and post processed with the NGS OPUS (National Geodetic Survey, Online Positioning User Service) solution for the occupied Control Point 1. Vertical Datum was observed in NAVD 88, using GEOID18.

ONSITE CONTROL, HORIZONTAL AND VERTICAL

Control Point 1 - Set capped rebar
N: 3515262.83
E: 4656453.72
Z: 1106.31

CONTROL POINT DATA				
POINT #	ELEVATION	NORTH	EAST	DESCRIPTION
1	1106.31	3515262.83	4656453.73	SET CAPPED REBAR
2	1118.46	3514635.54	4654425.23	SET CAPPED REBAR
3	1126.03	3516124.51	4656021.12	SET CAPPED REBAR

GREAT LAKES/ATLANTIC REGIONAL OFFICE
7322 NEWMAN BOULEVARD, BUILDING 2, STE. 200
DEXTER, MICHIGAN 48130
(734) 623-2000
www.ducks.org
DUCKS UNLIMITED

AFFIX SEAL: DUCKS UNLIMITED, INC.

ON:

TOPOGRAPHY & EXISTING CONDITIONS
PROJECT NO. GRE853129D
GREENE COUNTY
IOWA

Revision	Sheet	Revisions	Date	By
0	ALL	FINAL PLANS	2/20/2026	AS
1	ALL	IDALS REVIEW	7/16/26	AB
2	ALL	CHANNEL MODIFICATION	10-13-26	AS

CAD FILE: IA-340-100 Topo Survey
DESIGNED BY: AS & AB
DRAWN BY: GS & AS
SURVEYED BY: AS & AB
BIOLOGIST: HS
DATE: 10/13/26
PROJECT NUMBER: US-IA-340-100

C051

NOTICE: CONSTRUCTION SITE SAFETY IS THE SOLE RESPONSIBILITY OF THE CONTRACTOR. DUCKS UNLIMITED, INC. SHALL NOT ASSUME ANY RESPONSIBILITY FOR THE SAFETY OF THE WORK PERFORMED, PERSONS ENGAGED IN THE WORK, NEARBY STRUCTURES, OR OF OTHER PERSONS ON-SITE. THE CONTRACTOR SHALL INDEMNIFY AND HOLD HARMLESS DUCKS UNLIMITED, INC. AND ITS AUTHORIZED AGENT OR REPRESENTATIVES FROM ANY AND ALL LIABILITY, REAL OR ALLEGED, IN CONNECTION WITH THE PERFORMANCE OF WORK ON THIS PROJECT, EXCEPTING FOR LIABILITY ARISING FROM THE SOLE NEGLIGENCE OF DUCKS UNLIMITED, INC. OR ITS AUTHORIZED AGENT OR REPRESENTATIVES. THIS PLAN, AS AN INSTRUMENT OF SERVICE, IS THE PROPERTY OF DUCKS UNLIMITED, INC. AND MAY NOT BE USED OR REPRODUCED FOR ANY PURPOSE WITHOUT THE PRIOR WRITTEN CONSENT OF AN AUTHORIZED AGENT OF DUCKS UNLIMITED, INC. ANY UNAUTHORIZED USE OF THIS PLAN SHALL BE AT THE USER'S SOLE RISK AND WITHOUT LIABILITY TO DUCKS UNLIMITED, INC. THE CONTRACTOR AND SUBCONTRACTORS SHALL NOT RELY ON THE ACCURACY OR COMPLETENESS OF DUCKS UNLIMITED, INC. DOCUMENTS IN LIEU OF INDEPENDENTLY EXAMINING THE SITE AND VERIFYING THE DIMENSIONS AND CONDITIONS SHOWN ON THE DRAWINGS. DUCKS UNLIMITED, INC. IS NOT RESPONSIBLE FOR THE ACCURACY OR COMPLETENESS OF ELECTRONIC DATA OR FOR ANY CHANGES MADE TO THE DATA AFTER IT LEAVES THE CONTROL OF DUCKS UNLIMITED, INC. BY USING ANY OF THIS MATERIAL, DATA AND INFORMATION, USER AGREES THAT DUCKS UNLIMITED, INC. IS NOT RESPONSIBLE FOR THEIR USE OF THE MATERIAL, DATA AND INFORMATION OR THE RESULTS THEREOF. BY USING ANY OF THIS MATERIAL, DATA AND INFORMATION, USER AGREES TO INDEMNIFY AND HOLD HARMLESS DUCKS UNLIMITED, INC. FROM ANY AND ALL CLAIMS, LOSSES, DAMAGES, LIABILITIES, COSTS AND EXPENSES ARISING OUT OF OR RESULTING FROM USER'S USE OF THE MATERIAL, DATA AND INFORMATION, INCLUDING BUT NOT LIMITED TO ANY CLAIMS ARISING OUT OF OR RESULTING FROM ANY ERRORS OR OMISSIONS IN THE MATERIAL, DATA OR INFORMATION PROVIDED BY DUCKS UNLIMITED, INC. IF THIS PLAN IS ALTERED, THE ALTERING ENGINEER, ARCHITECT, LANDSCAPE ARCHITECT OR LAND SURVEYOR SHALL STAMP THE DOCUMENT AND INCLUDE THE NOTATION "ALTERED BY" FOLLOWED BY THEIR SIGNATURE, THE DATE OF SUCH ALTERATION, AND A SPECIFIC DESCRIPTION OF THE ALTERATION.

C:\Users\jaschippers\Ducks Unlimited Incorporated\Iowa - Documents\Iowa\02_C3D Projects\IA-340-2 CREP PROJECTS\GREENE FITZPATRICK\C3D_DRAWINGS\IA-340-100 Topo Survey.dwg, 10/14/2026 9:53 AM, Andrew Schippers, Topo, None

EXCAVATION NOTE:
IF SANDY MATERIAL IS FOUND DURING EXCAVATION, THE ENGINEER MUST BE NOTIFIED IMMEDIATELY TO DETERMINE NECESSARY REMEDIATION ACTIONS. WORK IN THE AREA WHERE SAND IS IDENTIFIED SHALL BE POSTPONED UNTIL A COURSE OF ACTION CAN BE DETERMINED.

NOTES:
1. TILE MODIFICATION LOCATIONS, DIMENSIONS AND SLOPES ARE ESTIMATED BASED ON DATA ACQUIRED DURING INITIAL TILE INVESTIGATION. ADDITIONAL TILE INVESTIGATION & POTENTIAL MODIFICATION MAY BE NEEDED ONSITE, WHICH SHALL BE COORDINATED WITH ENGINEER.
2. IF ADDITIONAL TILE LINES ARE ENCOUNTERED THEY WILL BE ROUTED TO OUTLET AT 1107.00'.
3. FENCING ALONG SOUTH AND WEST SIDES OF HOMESTEAD PROPERTY SHALL BE REMOVED AND REPLACED, AS NECESSARY, TO ACCOMMODATE SPREADING SPOIL MATERIAL, AS SHOWN ON THE PLANS. FENCING SHALL BE REINSTALLED TO MATCH PRE-CONSTRUCTION CONDITIONS.

TILE MODIFICATION #6
PATTERN TILE IN THIS AREA TO BE ABANDONED & PLUGGED DOWNSTREAM.
WETLAND POOL EXCAVATION 3:1 SIDE SLOPES BOTTOM ELEV.: 1106.00'
WETLAND ALIGNMENT - FLOWPATH (SEE SHEET C203)
PROPOSED BORROW (IF NEEDED)
TILE MODIFICATION #5
WETLAND ALIGNMENT - FLOWPATH (SEE SHEET C203)
CHANNEL EXCAVATION 3:1 SIDE SLOPES WITH 4' WIDE BOTTOM ELEV. 1106.00'
TILE MODIFICATION #7
TILE MODIFICATION #1
TILE MODIFICATION #4
SEDIMENTATION BASIN W/ 3:1 SIDE SLOPES BOTTOM DIM.: 100'X50' BOTTOM ELEV.: 1104.00'
TILE MODIFICATION #3
TILE MODIFICATION #2
SUBMERGED BERM: 10' WIDE TOP WITH 3:1 SIDE SLOPES TOP OF BERM ELEVATION: 1106.0'
PROPOSED EASEMENT
PROPOSED SPOIL AREA
FILL TO 1118.00' W/ 10:1 SIDE SLOPES
BERM
TOP ELEVATION: 1110.30'
TOP WIDTH: 12.0'
10:1 FRONT SLOPE
4:1 BACKSLOPE
SHEET PILE WEIR 75 LF
CREST ELEVATION: 1106.00'
STILLING BASIN RISER
36"Ø ALUMINUM CMP
RIM: 1105.00'
BASE FLOWS FROM WETLAND ARE ROUTED BACK TO DD TILE MAIN
SURFACE FLOW TO I AVENUE CULVERTS WILL OCCUR WHEN DD TILE MAIN CAPACITY HAS BEEN REACHED
STILLING BASIN
15.0' X 75.0'
BOTTOM ELEV.: 1104.00'
SUMP AROUND RISER TO 1103.00'
APPROXIMATE PROPERTY LINES
PROPOSED SPOIL AREA (SEE NOTES)
FILL TO 1110.5' SLOPING DOWN TO 1110.3 CONTOUR AS SHOWN
WETLAND POOL EXCAVATION
3:1 SIDE SLOPES
BOTTOM ELEV.: 1106.00'
SLOPES TO DEEPER EXCAVATIONS
100 YEAR STORM CONTOUR ELEVATION: 1109.24'
25 YEAR STORM CONTOUR ELEVATION: 1108.26'
DESIGNED NORMAL WATER LEVEL: 1106.00'
DRAW DOWN STRUCTURE
36"Ø ALUMINUM CMP SLOTTED RISER
RIM: 1106.00'
DRAW DOWN WCS
48"Ø ALUMINUM CMP
RIM: 1110.00'
15"Ø INLET INV.: 1104.00'
15"Ø OUTLET INV.: 1104.00'
CONSTRUCTION ACCESS
EXISTING FIELD DRIVE
I AVENUE
INV. 1115.86'
150TH STREET
I AVENUE
CONCRETE PAD MINIMUM ELEV.: 1116.88'
BASEMENT ELEV.: 1112.44
BARN SLAB ELEV.: 1123.55'
48" RCP CULVERT INV.: 1104.41'
48" RCP CULVERT INV.: 1104.72'
72" RCP CULVERT W. INV.: 1100.22'
72" RCP CULVERT E. INV.: 1098.91'
5" RCP TILE — 4" CLAY TILE
5" CLAY TILE TOP: 1109.81'
5" CLAY TILE 6" RCP TILE TOP: 1104.90' INV.: 1104.40
TILE FOUND
4" HDPE TILE TOP: 1109.77'
4" HDPE TILE
TEST PIT 1
TEST PIT 2
TEST PIT 3
TEST PIT 5
TEST PIT 6
CP 1
CP 3
N

WETLAND DESIGN CRITERIA			
DESIGN CRITERIA		UNIT	REQUIREMENT/NOTES
WATERSHED AREA	1,396.00	ACRES	500 MIN.
POOL NORMAL WATER LEVEL (NWL) ELEVATION	1,106.00	FT.	
DESIGNED WETLAND POOL AREA (@ NWL)	6.41	ACRES	1106.0 ELEV.
PERCENT POOL AREA TO WATERSHED AREA	0.5	%	>=0.50%
MAX. POOL DEPTH	2.00	FT.	
AVG. POOL DEPTH	0.84	FT.	
DEEP WATER AREA (DEPTH >3 FT)	0.00	ACRES	
PERCENT DEEP WATER TO POOL AREA	0.00	%	<25%
POOL STORAGE VOLUME AT NWL	5.396	ACRE-FT	
BERM ELEVATION	1,110.30	FT.	
POOL STORAGE VOLUME AT TOP OF BERM	38.749	ACRE-FT	
MAX BERM HEIGHT	6.30	FT.	
AVG. BERM HEIGHT	2.71	FT.	
BERM LENGTH	386	FT.	
PRIMARY WEIR ELEVATION	1,106.00	FT.	
PRIMARY WEIR LENGTH	75.00	FT.	
25-YEAR STORM HWL IN WETLAND POOL	1,108.26	FT.	PRINCIPAL CAPACITY
25-YEAR PEAK INFLOW TO WETLAND	888.89	CFS	
25-YEAR PEAK OUTFLOW OF WETLAND	875.09	CFS	
100-YEAR STORM HWL IN WETLAND POOL	1,109.24	FT.	TOTAL CAPACITY
100-YEAR PEAK INFLOW TO WETLAND	1,544.89	CFS	
100-YEAR PEAK OUTFLOW OF WETLAND	1,531.85	CFS	

WETLAND POOL CHARACTERISTICS			
WETLAND POOL DEPTH (FT.)	ELEV. (FT.)	INCREMENTAL AREA (ACRE)	CUMULATIVE VOLUME (ACRE-FT)
0.0	1104.0	0.943	-
1.0	1105.0	1.249	1.568
2.0	1106.0	6.409	5.396
3.0	1107.0	6.899	12.051
4.0	1108.0	7.280	19.140
5.0	1109.0	7.669	26.615
6.0	1110.0	10.179	35.538
6.3	1110.3	11.226	38.749

BERM TO I AVENUE BASIN DESIGN CRITERIA			
10-YEAR STORM HWL IN BASIN*	1111.25	FT.	BERM/WEIR DESIGNED FOR BACKFLOW WEST FROM I AVENUE
10-YEAR PEAK INFLOW TO BASIN	967.55	CFS	
10-YEAR PEAK OUTFLOW OF BASIN	496.58	CFS	
25-YEAR STORM HWL IN WETLAND BASIN	1113.18	FT.	
25-YEAR PEAK INFLOW TO BASIN	1330.74	CFS	
25-YEAR PEAK OUTFLOW OF BASIN	574.24	CFS	
100-YEAR STORM HWL IN BASIN	1115.88	FT.	
100-YEAR PEAK INFLOW TO BASIN	2143.15	CFS	
100-YEAR PEAK OUTFLOW OF BASIN	668.66	CFS	

*A 309.04 ACRE WATERSHED, TO THE SOUTH, BYPASSES THE BERM AND ROUTES TO THE TWO CULVERTS AT I AVENUE. THE I AVENUE CULVERTS CONTROL. WETLAND WILL ROUTINELY SEE BACK-FLOW FROM I-AVENUE INTO WETLAND (I.E. THE 1-YEAR EVENT WILL PEAK AT 1107.81' AND THEREBY BACK FLOW THROUGH THE PRIMARY WEIR AT 1106.00')

GRAPHIC SCALE
100 0 50 100 200 400
1 inch = 100 feet

GREAT LAKES/ATLANTIC REGIONAL OFFICE
7322 NEWMAN BOULEVARD, BUILDING 2, STE. 200
DEXTER, MICHIGAN 48130
(734) 623-2000
www.ducks.org
DUCKS UNLIMITED

AFFIX SEAL: DUCKS UNLIMITED, INC.
ON:

SITE PLAN
PROJECT NO. GRE853129D
GREENE COUNTY
IOWA

Revision	Sheet	Revisions	Date	By
0	ALL	FINAL PLANS	2/20/2026	AS
1	ALL	IDALS REVIEW	7/16/26	AB
2	ALL	CHANNEL MODIFICATION	10-13-26	AS

CAD FILE: IA-340-100 Site Plan
DESIGNED BY: AS & AB
DRAWN BY: GS & AS
SURVEYED BY: AS & AB
BIOLOGIST: HS
DATE: 10/13/26
PROJECT NUMBER: US-IA-340-100

C101

NOTICE: CONSTRUCTION SITE SAFETY IS THE SOLE RESPONSIBILITY OF THE CONTRACTOR; DUCKS UNLIMITED, INC., SHALL NOT ASSUME ANY RESPONSIBILITY FOR THE SAFETY OF THE WORK PERFORMED, PERSONS ENGAGED IN THE WORK, NEARBY STRUCTURES, OR OF OTHER PERSONS ON-SITE. THE MATERIAL ON THIS PLAN IS THE PROPERTY OF DUCKS UNLIMITED, INC. AND IS NOT TO BE USED OR REPRODUCED FOR ANY PURPOSE WITHOUT THE PRIOR WRITTEN CONSENT OF AN AUTHORIZED AGENT OF DUCKS UNLIMITED, INC. ANY AND ALL INFORMATION IS PROVIDED "AS IS" AND DUCKS UNLIMITED, INC. MAKES NO REPRESENTATIONS OR WARRANTIES OF ANY KIND WHATSOEVER REGARDING SUCH INFORMATION. DUCKS UNLIMITED, INC. SHALL NOT BE LIABLE FOR ANY DAMAGES INCURRED BY THE USERS SOLE RISK. BY USING ANY OF THIS MATERIAL, DATA AND INFORMATION, USER AGREES THAT DUCKS UNLIMITED, INC. IS NOT RESPONSIBLE FOR THEIR USE OF THE MATERIAL, DATA AND INFORMATION OR THE RESULTS THEREOF. IF THIS PLAN IS ALTERED, THE ALTERING ENGINEER, ARCHITECT, LANDSCAPE ARCHITECT OR LAND SURVEYOR SHALL AFFIX HIS/HER SEAL TO THE DOCUMENT AND INCLUDE THE NOTATION 'ALTERED BY' FOLLOWED BY THEIR SIGNATURE, THE DATE OF SUCH ALTERATION, AND A SPECIFIC DESCRIPTION OF THE ALTERATION.

C:\Users\aschippers\Ducks Unlimited Incorporated\Iowa - Documents\Iowa\02_C3D Projects\IA-340-2 CREP PROJECTS\GREENE FTI\2PATRICK\C3D_DRAWINGS\IA-340-100 Site Plan.dwg, 10/14/2026 9:53 AM, Andrew Schippers, SITE PLAN, None

NOTE:
BERM SHALL BE OVERBUILT BY 5% (1110.6'), SO
THAT THE SETTLED TOP OF BERM WILL BE 1110.3'

DESIGNED NORMAL WATER LEVEL: 1106.00'

25 YEAR STORM CONTOUR
ELEVATION: 1108.26'

100 YEAR STORM CONTOUR
ELEVATION: 1109.24'

REMOVE AND PLUG
A MINIMUM OF 100 LF
OF TILE

SHEET PILE WEIR
75 LF CREST
ELEVATION: 1106.00'

DRAW DOWN STRUCTURE
36"Ø ALUMINUM CMP SLOTTED RISER
RIM: 1106.00'
15"Ø OUTLET INV.: 1104.00'
IA DOT CLASS E RIPRAP STACKED
AROUND STRUCTURE

DRAW DOWN WCS
48"Ø ALUMINUM CMP
RIM: 1110.00'
15"Ø INLET INV.: 1104.00'
15"Ø OUTLET INV.: 1104.00'

TOP OF BERM
ELEVATION 1110.3'
(12' WIDE TOP)

TOE DRAIN; BEGIN AT INV.
1105.3'; END AT INV. 1105.0'

TOE DRAIN; BEGIN AT INV.
1105.1'; END AT INV. 1105.0'

FILTER DIAPHRAGM

DRAW DOWN OUTLET
INCLUDES RODENT GUARD
INV.: 1104.00'

STILLING BASIN RISER
36"Ø ALUMINUM CMP
RIM: 1104.00'
STILLING BASIN SUMPED TO 1103.00'
AROUND RISER

STILLING BASIN
15.0' X 63.0'
BOTTOM ELEV.: 1104.00'

NOT SHOWN - IA DOT CLASS E GROUTED
RIPRAP AT 1.5' DEPTH PROVIDE
NON-WOVEN GEOTEXTILE FABRIC
UNDER RIPRAP; SECURE FABRIC WITH
PINS AND TRENCHING IN EDGES

75.00'

1.50'

TEST PIT 2

GRAPHIC SCALE
20 0 10 20 30 60
1 inch = 20 feet

PLAN - EMBANKMENT

NOTE:
BERM SHALL BE OVERBUILT BY 5% (1110.6'), SO
THAT THE SETTLED TOP OF BERM WILL BE 1110.3'

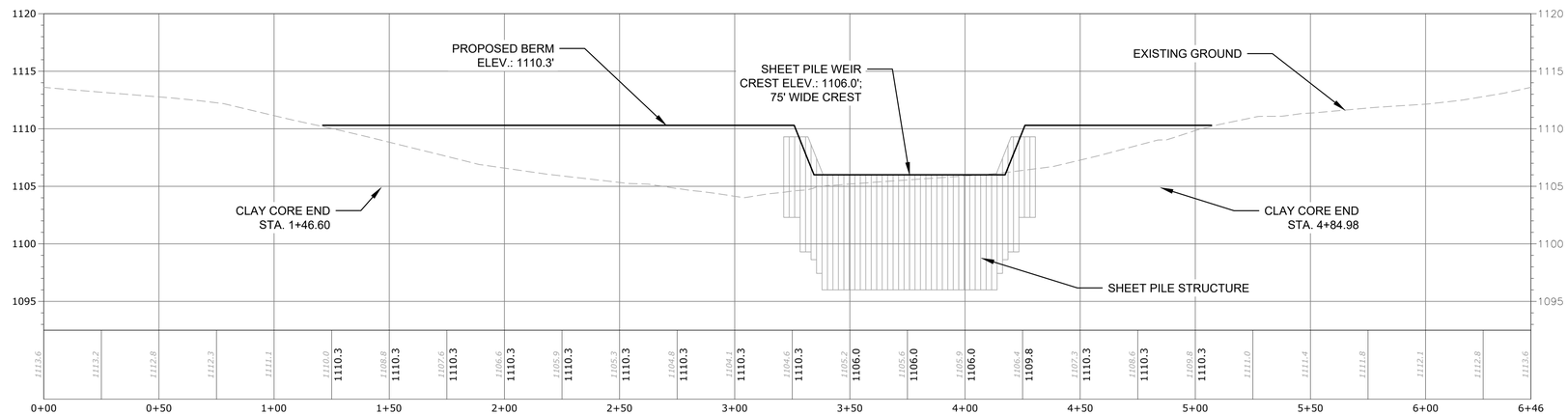

PROFILE - EMBANKMENT

HORIZONTAL SCALE
30 0 15 30 60
1 inch = 30 feet

VERTICAL SCALE
6 0 3 6 12
1 inch = 6 feet

GREAT LAKES/ATLANTIC REGIONAL OFFICE
7322 NEWMAN BOULEVARD, BUILDING 2, STE. 200
DEXTER, MICHIGAN 48130
(734) 623-2000
www.ducks.org
DUCKS UNLIMITED

AFFIX SEAL: DUCKS UNLIMITED, INC.

ON:

EMBANKMENT PLAN & PROFILE
PROJECT NO. GRE853129D
GREENE COUNTY
IOWA

Revision	Sheet	Revisions	Date	By
0	ALL	FINAL PLANS	2/20/2026	AS
1	ALL	IDALS REVIEW	7/16/26	AB
2	ALL	CHANNEL MODIFICATION	10-13-26	AS

CAD FILE:
IA-340-100 Site Plan

DESIGNED BY: AS & AB

DRAWN BY: GS & AS

SURVEYED BY: AS & AB

BIOLOGIST: HS

DATE:
10/13/26

PROJECT NUMBER:
US-IA-340-100

C201

NOTICE: CONSTRUCTION SITE SAFETY IS THE SOLE RESPONSIBILITY OF THE CONTRACTOR; DUCKS UNLIMITED, INC. SHALL NOT ASSUME ANY RESPONSIBILITY FOR THE SAFETY OF THE WORK PERFORMED, PERSONS ENGAGED IN THE WORK, NEARBY STRUCTURES, OR OF OTHER PERSONS ON-SITE. THE CONTRACTOR SHALL INDEMNIFY AND HOLD HARMLESS DUCKS UNLIMITED, INC. FROM ANY AND ALL LIABILITY, REAL OR ALLEGED, IN CONNECTION WITH THE PERFORMANCE OF WORK ON THIS PROJECT, EXCEPTING LIABILITY ARISING FROM THE SOLE NEGLIGENCE OF DUCKS UNLIMITED, INC. OR ITS AGENTS. THE CONTRACTOR AGREES THAT HE SHALL BE SOLELY RESPONSIBLE FOR JOB SITE CONDITIONS DURING THE COURSE OF CONSTRUCTION OF THIS PROJECT, INCLUDING SAFETY OF ALL PERSONS AND PROPERTY. THIS REQUIREMENT SHALL APPLY CONTINUOUSLY AND NOT BE LIMITED TO NORMAL WORKING HOURS. THE CONTRACTOR FURTHER AGREES TO DEFEND, INDEMNIFY AND HOLD DESIGN PROFESSIONAL HARMLESS FROM ANY AND ALL LIABILITY, REAL OR ALLEGED, IN CONNECTION WITH THE PERFORMANCE OF WORK ON THIS PROJECT, EXCEPTING LIABILITY ARISING FROM THE SOLE NEGLIGENCE OF DESIGN PROFESSIONAL.
THE INFORMATION ON THIS PLAN WAS OBTAINED BY DUCKS UNLIMITED, INC. AND ITS AUTHORIZED AGENT. DUCKS UNLIMITED, INC. MAKES NO REPRESENTATION, EXPRESSED OR IMPLIED, AS TO THE ACCURACY OF THE INFORMATION CONTAINED ON THIS PLAN AND ASSUMES NO RESPONSIBILITY FOR ANY CONCLUSIONS OR INTERPRETATIONS MADE BY THE USER BASED ON THIS INFORMATION. DUCKS UNLIMITED, INC. SHALL NOT BE RESPONSIBLE FOR ANY INCORRECT DATA OR INTERPRETATIONS RESULTING FROM THE INFORMATION PROVIDED ON THIS PLAN.
THE USER'S SOLE RISK. BY USING ANY OF THIS MATERIAL, DATA AND INFORMATION, USER AGREES THAT DUCKS UNLIMITED, INC. IS NOT RESPONSIBLE FOR THEIR USE OF THE MATERIAL, DATA AND INFORMATION OR THE RESULTS THEREOF.
IT IS A VIOLATION OF LAW FOR ANY PERSON, UNLESS THEY ARE ACTING UNDER THE DIRECTION OF A LICENSED PROFESSIONAL ENGINEER, ARCHITECT OR LAND SURVEYOR, TO ALTER AN ITEM IN ANY WAY IF AN ENGINEER, ARCHITECT, LANDSCAPE ARCHITECT OR LAND SURVEYOR HAS AFFIXED HIS/HER SEAL TO THE DOCUMENT AND INCLUDED THE NOTATION 'ALTERED BY' FOLLOWED BY THEIR SIGNATURE, THE DATE OF SUCH ALTERATION, AND A SPECIFIC DESCRIPTION OF THE ALTERATION.

C:\Users\jaschippers\Ducks Unlimited Incorporated\Iowa - Documents\Iowa\02_C3D Projects\IA-340-2 CREP PROJECTS\GREENE FIT2PATRICK\C3D_DRAWINGS\IA-340-100 Site Plan.dwg, 10/14/2026 9:53 AM, Andrew Schippers, EMBANKMENT PLAN & PROFILE, None

NOTICE: CONSTRUCTION SITE SAFETY IS THE SOLE RESPONSIBILITY OF THE CONTRACTOR. DUCKS UNLIMITED, INC., SHALL NOT ASSUME ANY RESPONSIBILITY FOR THE SAFETY OF THE WORK PERFORMED, PERSONS ENGAGED IN THE WORK, NEARBY STRUCTURES, OR OF OTHER PERSONS ON-SITE. THESE PLANS AND SPECIFICATIONS ARE THE PROPERTY OF DUCKS UNLIMITED, INC. AND ARE NOT TO BE USED IN ANY WAY, NOT BE USED OR REPRODUCED FOR ANY PURPOSE WITHOUT THE PRIOR WRITTEN CONSENT OF AN AUTHORIZED AGENT OF DUCKS UNLIMITED, INC. ALL INFORMATION REGARDING EXISTING CONDITIONS, UTILITIES, AND PROPERTY BOUNDARIES ARE APPROXIMATE AND MUST BE VERIFIED BY THE CONTRACTOR. DUCKS UNLIMITED, INC. MAKES NO REPRESENTATION, EXPRESS OR IMPLIED, AS TO THE ACCURACY OF THIS INFORMATION AND ASSUMES NO RESPONSIBILITY FOR ANY CONCLUSIONS OR INTERPRETATIONS MADE BY THE CONTRACTOR BASED ON THE INFORMATION SHOWN. ANY RELIANCE ON THIS INFORMATION BY THE CONTRACTOR IS AT THE USERS SOLE RISK. BY USING ANY OF THIS MATERIAL, DATA AND INFORMATION, USER AGREES THAT DUCKS UNLIMITED, INC. IS NOT RESPONSIBLE FOR THEIR USE OF THE MATERIAL, DATA AND INFORMATION OR THE RESULTS THEREOF. IF THIS PLAN IS ALTERED, THE ALTERING ENGINEER, ARCHITECT, LANDSCAPE ARCHITECT OR LAND SURVEYOR SHALL STAMP THE DOCUMENT AND INCLUDE THE NOTATION "ALTERED BY" FOLLOWED BY THEIR SIGNATURE, THE DATE OF SUCH ALTERATION, AND A SPECIFIC DESCRIPTION OF THE ALTERATION.

C:\Users\aschippers\Ducks Unlimited Incorporated\Iowa Documents\Iowa\02_C3D Projects\IA-340-2 CREP PROJECTS\GREENE FTF2PATRICK\C3D_DRAWING\IA-340-100 Site Plan.dwg, 10/14/2026 9:53 AM, Andrew Schippers, RIPRAP & DRAWN-DOWN PLAN, None

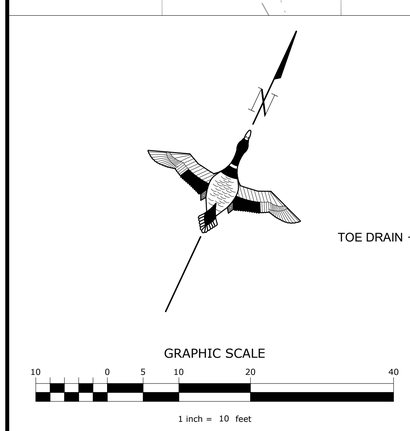

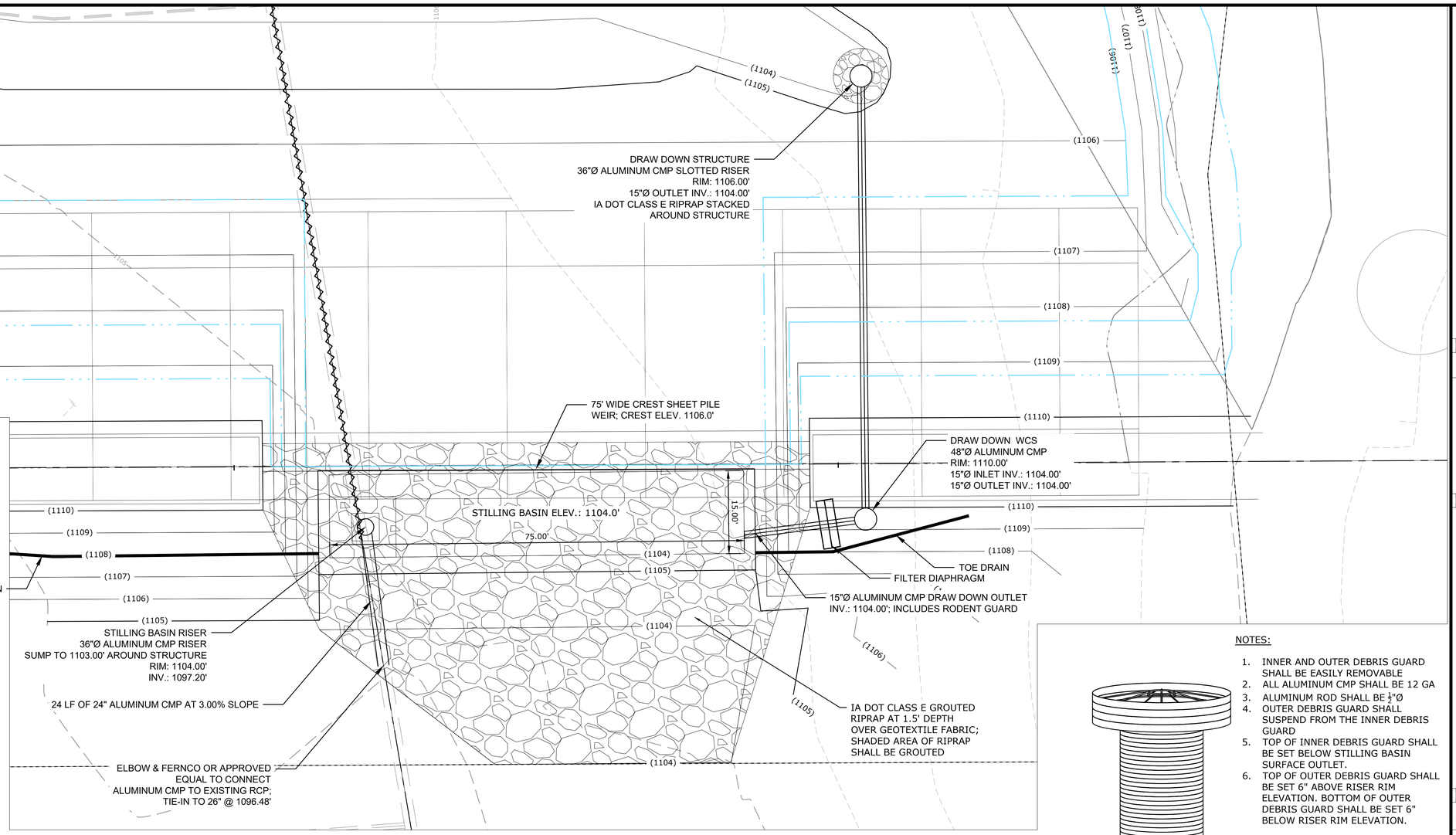

NOTES:

1. ALL CONNECTIONS SHALL BE MADE USING PRE-FABRICATED WATERTIGHT CONNECTIONS FROM MANUFACTURER, OR ELSE, PROVIDE WITH MAR-MAC WRAP AND CONCRETE COLLARS.
2. BITUMINOUS COATING ON ANY ALUMINUM IN CONTACT WITH CONCRETE. COATING SHALL EXTEND TO ABOVE THE EMBEDMENT

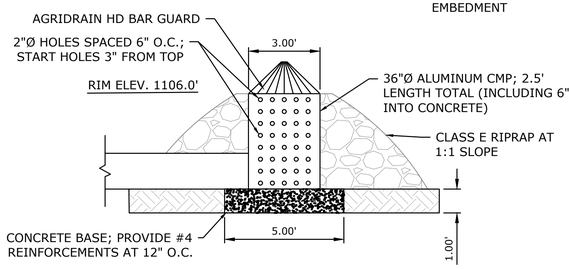

36" ALUMINUM CMP DRAW DOWN STRUCTURE INLET DETAIL

SCALE: 1" = 3'

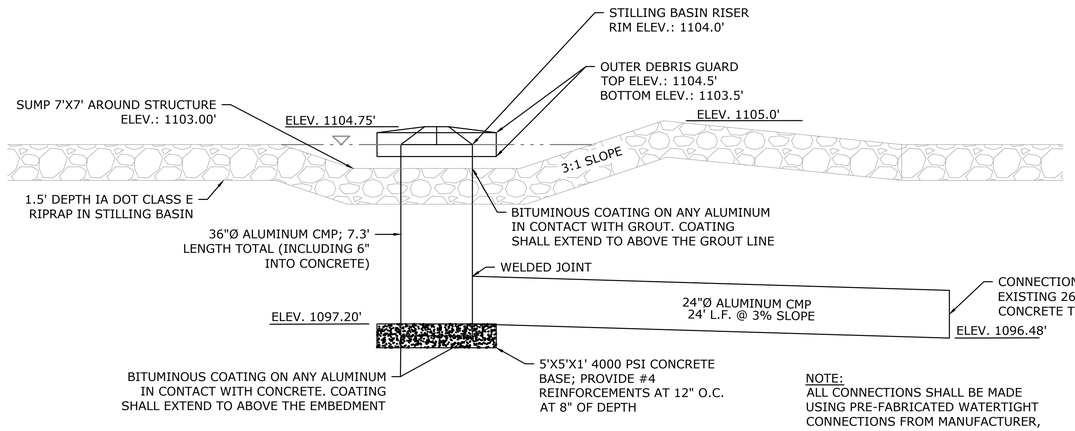

NOTE:
ALL CONNECTIONS SHALL BE MADE USING PRE-FABRICATED WATERTIGHT CONNECTIONS FROM MANUFACTURER, OR ELSE, PROVIDE WITH MAR-MAC WRAP AND CONCRETE COLLARS.

36" ALUMINUM CMP STILLING BASIN RISER

SCALE: 1" = 3'

NOTES:

1. INNER AND OUTER DEBRIS GUARD SHALL BE EASILY REMOVABLE
2. ALL ALUMINUM CMP SHALL BE 12 GA
3. ALUMINUM ROD SHALL BE ½"Ø
4. OUTER DEBRIS GUARD SHALL SUSPEND FROM THE INNER DEBRIS GUARD
5. TOP OF INNER DEBRIS GUARD SHALL BE SET BELOW STILLING BASIN SURFACE OUTLET.
6. TOP OF OUTER DEBRIS GUARD SHALL BE SET 6" ABOVE RISER RIM ELEVATION. BOTTOM OF OUTER DEBRIS GUARD SHALL BE SET 6" BELOW RISER RIM ELEVATION.

ASSEMBLED STRUCTURE

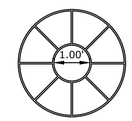

INNER DEBRIS GUARD
1/2"Ø ALUMINUM ROD

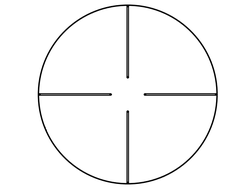

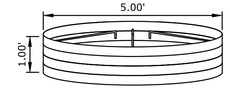

OUTER DEBRIS GUARD
60"Ø ALUMINUM CMP - 12 GA

36" ALUMINUM CMP REMOVABLE DEBRIS GUARDS

SCALE: 1" = 2'

GREAT LAKES/ATLANTIC REGIONAL OFFICE
7322 NEWMAN BOULEVARD, BUILDING 2, STE. 200
DEXTER, MICHIGAN 48130
(734) 623-2000
www.ducks.org
DUCKS UNLIMITED

AFFIX SEAL: DUCKS UNLIMITED, INC.

ON:

RIPRAP & DRAW-DOWN PLAN
PROJECT NO. GRE853129D
GREENE COUNTY
IOWA

Revision	Sheet	Revisions	Date	By
0	ALL	FINAL PLANS	2/20/2026	AS
1	ALL	IDALS REVIEW	7/16/26	AB
2	ALL	CHANNEL MODIFICATION	10-13-26	AS

CAD FILE:
IA-340-100 Site Plan

DESIGNED BY: AS & AB

DRAWN BY: GS & AS

SURVEYED BY: AS & AB

BIOLOGIST: HS

DATE:
10/13/26

PROJECT NUMBER:
US-IA-340-100

C202

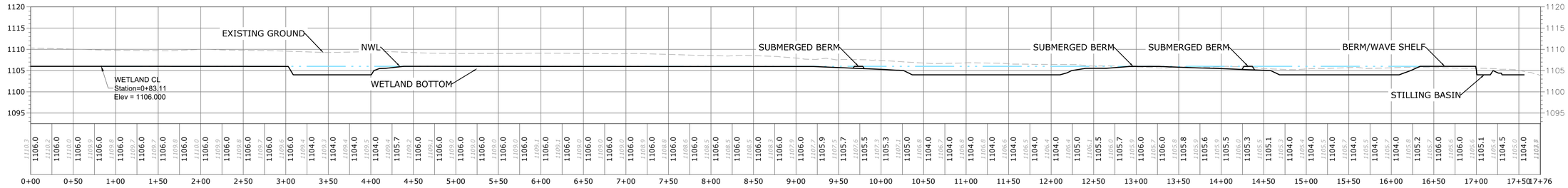

PROFILE - FLOWPATH

HORIZONTAL SCALE

60 0 30 60 120

1 inch = 60 feet

VERTICAL SCALE

12 0 6 12 24

1 inch = 12 feet

NOTE:
BERM SHALL BE OVERBUILT BY 5% (1110.6'), SO THAT THE SETTLED TOP OF BERM WILL BE 1110.3'

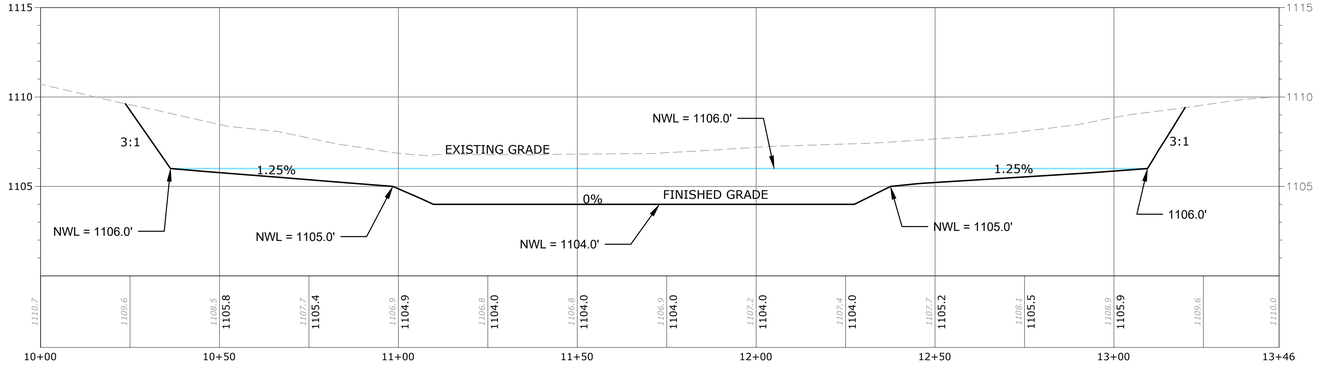

PROFILE - CROSS SECTION

HORIZONTAL SCALE

20 0 10 20 40

1 inch = 20 feet

VERTICAL SCALE

4 0 2 4 8

1 inch = 4 feet

NOTICE: CONSTRUCTION SITE SAFETY IS THE SOLE RESPONSIBILITY OF THE CONTRACTOR; DUCKS UNLIMITED, INC., SHALL NOT ASSUME ANY RESPONSIBILITY FOR THE SAFETY OF THE WORK PERFORMED, PERSONS ENGAGED IN THE WORK, NEARBY STRUCTURES, OR OF OTHER PERSONS ON-SITE. THE CONTRACTOR SHALL INDEMNIFY AND HOLD HARMLESS DUCKS UNLIMITED, INC. AND ITS OFFICERS, AGENTS AND EMPLOYEES FROM AND AGAINST ALL CLAIMS, DAMAGES, LOSSES AND EXPENSES ARISING OUT OF OR RESULTING FROM THE PERFORMANCE OF THE WORK. THIS PLAN, AND ALL INFORMATION CONTAINED HEREIN, IS THE PROPERTY OF DUCKS UNLIMITED, INC. ("DUCKS UNLIMITED"). ANY USE OF THIS PLAN, OR ANY PORTION THEREOF, WITHOUT THE PRIOR WRITTEN CONSENT OF AN AUTHORIZED AGENT OF DUCKS UNLIMITED, INC., IS STRICTLY PROHIBITED. DUCKS UNLIMITED, INC., MAKES NO REPRESENTATION, EXPRESS OR IMPLIED, WITH RESPECT TO THE ACCURACY OR COMPLETENESS OF THE DATA CONTAINED HEREIN OR ITS FITNESS FOR ANY PARTICULAR PURPOSE. USE OF THIS PLAN AND THE INFORMATION CONTAINED HEREIN IS AT THE USER'S SOLE RISK. BY USING ANY OF THIS MATERIAL, DATA AND INFORMATION, USER AGREES THAT DUCKS UNLIMITED, INC., IS NOT RESPONSIBLE FOR THEIR USE OF THE MATERIAL, DATA AND INFORMATION OR THE RESULTS THEREOF. THIS PLAN IS NOT A CONSTRUCTION DOCUMENT UNLESS IT BEARS THE STAMP OF A LICENSED PROFESSIONAL ENGINEER, ARCHITECT, LANDSCAPE ARCHITECT OR LAND SURVEYOR AND IS SIGNED BY THE PROFESSIONAL. IF THIS PLAN HAS BEEN ALTERED, THE ALTERING ENGINEER, ARCHITECT, LANDSCAPE ARCHITECT OR LAND SURVEYOR SHALL STAMP THE DOCUMENT AND INCLUDE THE NOTATION 'ALTERED BY' FOLLOWED BY THEIR SIGNATURE, THE DATE OF SUCH ALTERATION, AND A SPECIFIC DESCRIPTION OF THE ALTERATION.

C:\Users\aschippers\Ducks Unlimited Incorporated\Iowa - Documents\Iowa\02_C3D Projects\IA-340-2 CREP PROJECTS\GREENE FITZPATRICK\C3D_DRAWING\IA-340-100 Site Plan.dwg, 10/14/2026 9:53 AM, Andrew Schippers, WETLAND PROFILES, None

GREAT LAKES/ATLANTIC REGIONAL OFFICE
7322 NEWMAN BOULEVARD, BUILDING 2, STE. 200
DEXTER, MICHIGAN 48130
(734) 623-2000
www.ducks.org
DUCKS UNLIMITED

AFFIX SEAL: DUCKS UNLIMITED, INC.

ON:

WETLAND PROFILES
PROJECT NO. GRE853129D
GREENE COUNTY
IOWA

Revision	Sheet	Revisions	Date	By
0	ALL	FINAL PLANS	2/20/2026	AS
1	ALL	IDALS REVIEW	7/16/26	AB
2	ALL	CHANNEL MODIFICATION	10-13-26	AS

CAD FILE:
IA-340-100 Site Plan

DESIGNED BY: AS & AB

DRAWN BY: GS & AS

SURVEYED BY: AS & AB

BIOLOGIST: HS

DATE:
10/13/26

PROJECT NUMBER:
US-IA-340-100

C203

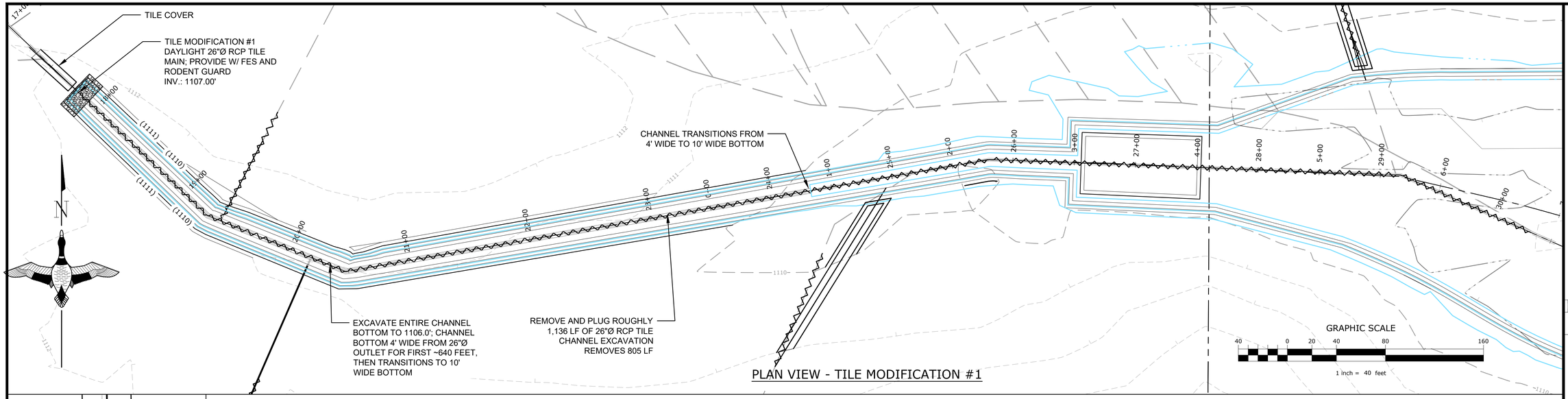

PLAN VIEW - TILE MODIFICATION #1

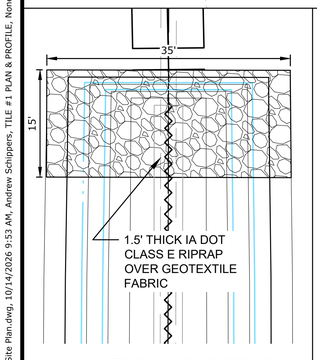

PLAN - TILE MAIN RIPRAP

1" = 10'

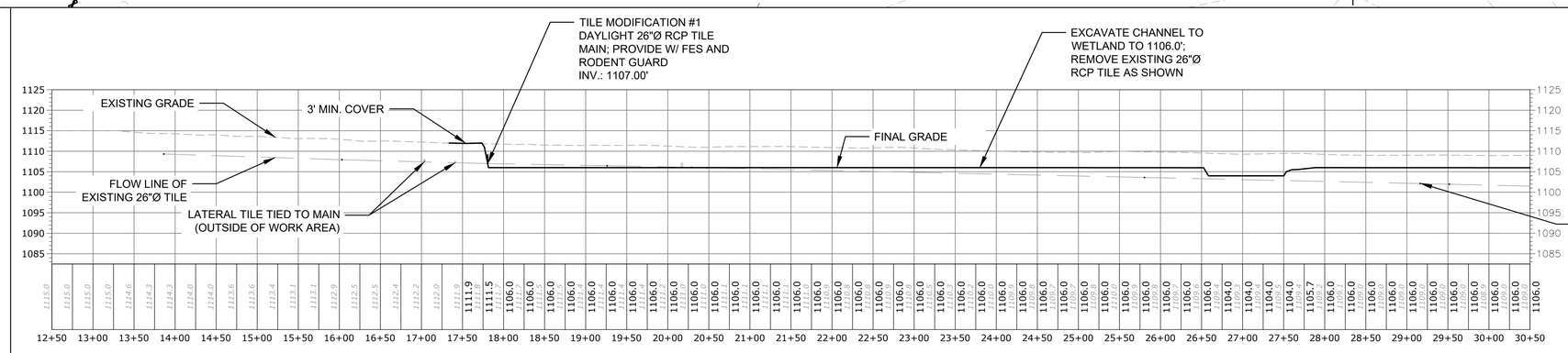

PROFILE - TILE MODIFICATION #1

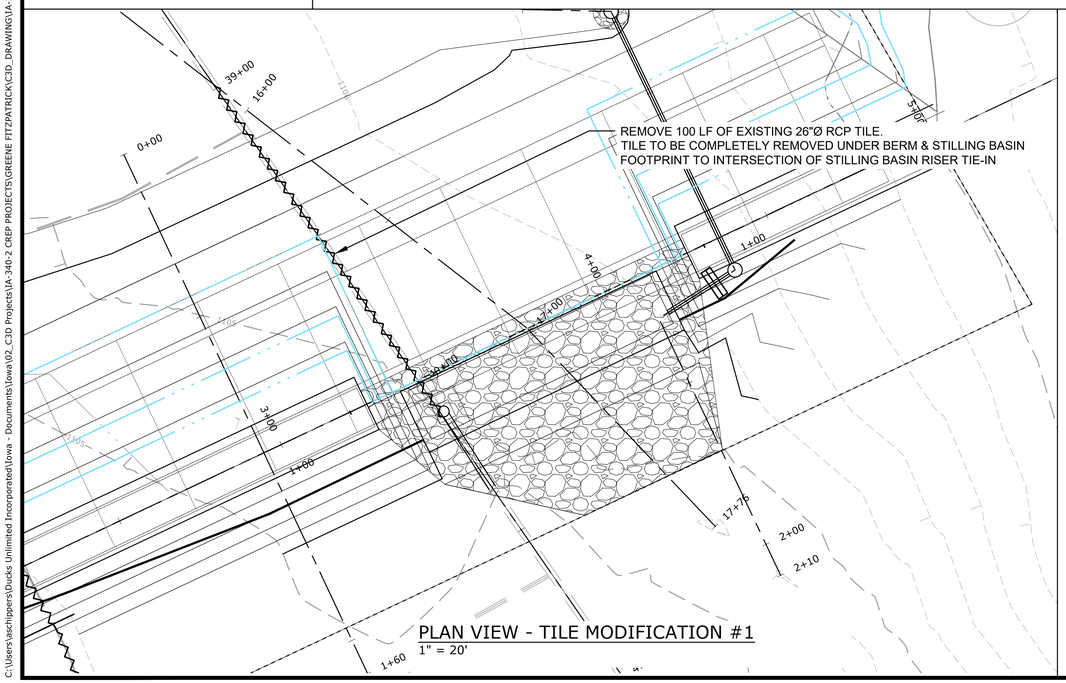

PLAN VIEW - TILE MODIFICATION #1

1" = 20'

NOTE:
TYPICAL TILE STILLING BASIN DETAIL APPLIES TO TILE MODIFICATIONS 2 THROUGH 7. TILE MODIFICATION 1 RIPRAP PLAN IS SHOWN ON THIS SHEET.

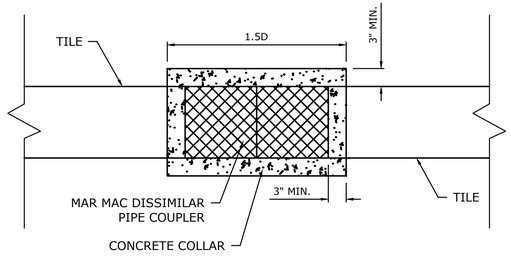

TYPICAL TILE CONNECTION DETAIL

NOT TO SCALE

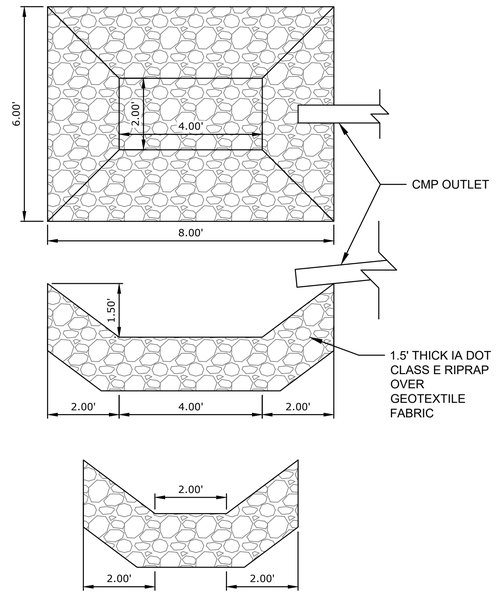

TYPICAL TILE STILLING BASIN DETAIL

NOT TO SCALE

HORIZONTAL SCALE
80 0 40 80 160
1 inch = 80 feet

VERTICAL SCALE
16 0 8 16 32
1 inch = 16 feet

DUCKS UNLIMITED
GREAT LAKES/ATLANTIC REGIONAL OFFICE
7322 NEWMAN BOULEVARD, BUILDING 2, STE. 200
DEXTER, MICHIGAN 48130
(734) 623-2000
www.ducks.org

AFFIX SEAL: DUCKS UNLIMITED, INC.

ON:

TILE #1 PLAN & PROFILE
PROJECT NO. GRE853129D
GREENE COUNTY
IOWA

Revision	Sheet	Revisions	Date	By
0	ALL	FINAL PLANS	2/20/2026	AS
1	ALL	IDALS REVIEW	7/16/26	AB
2	ALL	CHANNEL MODIFICATION	10-13-26	AS

CAD FILE:
IA-340-100 Site Plan
DESIGNED BY: AS & AB
DRAWN BY: GS & AS
SURVEYED BY: AS & AB
BIOLOGIST: HS
DATE:
10/13/26
PROJECT NUMBER:
US-IA-340-100

C204

NOTICE: CONSTRUCTION SITE SAFETY IS THE SOLE RESPONSIBILITY OF THE CONTRACTOR; DUCKS UNLIMITED, INC., SHALL NOT ASSUME ANY RESPONSIBILITY FOR THE SAFETY OF THE WORK PERFORMED, PERSONS ENGAGED IN THE WORK, NEARBY STRUCTURES, OR OF OTHER PERSONS ON-SITE. ALL INFORMATION CONTAINED HEREIN IS THE PROPERTY OF DUCKS UNLIMITED, INC. AND IS COPYRIGHTED. NOT TO BE USED OR REPRODUCED FOR ANY PURPOSE WITHOUT THE PRIOR WRITTEN CONSENT OF AN AUTHORIZED AGENT OF DUCKS UNLIMITED, INC. ALL DATA AND INFORMATION IS PROVIDED "AS IS". DUCKS UNLIMITED, INC. MAKES NO REPRESENTATIONS, WARRANTIES OR GUARANTEES WHATSOEVER REGARDING THE QUALITY, CONTENT, ACCURACY OR FITNESS FOR ANY PURPOSE OF ANY DATA OR INFORMATION PROVIDED HEREIN AND HEREBY DISCLAIMS ANY AND ALL WARRANTIES, WHETHER EXPRESS OR IMPLIED, AS TO ANY MATTER WHATSOEVER, INCLUDING, WITHOUT LIMITATION, THE CONDITION OF THE PROPERTY, ITS VALUE, SALEABILITY OR FITNESS FOR A PARTICULAR PURPOSE. BY USING ANY OF THIS MATERIAL, DATA AND INFORMATION, USER AGREES THAT DUCKS UNLIMITED, INC. IS NOT RESPONSIBLE FOR THEIR USE OF THE MATERIAL, DATA AND INFORMATION OR THE RESULTS THEREOF. THE USERS SOLE RISK. BY USING ANY OF THIS MATERIAL, DATA AND INFORMATION, USER AGREES TO INDEMNIFY AND HOLD HARMLESS DUCKS UNLIMITED, INC. FROM ANY AND ALL CLAIMS, LOSSES, LIABILITIES AND EXPENSES ARISING FROM USER'S USE OF THIS MATERIAL, DATA AND INFORMATION. IT IS A VIOLATION OF LAW FOR ANY PERSON, UNLESS ACTING UNDER THE DIRECTION OF A LICENSED PROFESSIONAL IS ENGINEER, TO ALTER ANY ITEM BEARING THE STAMP OF A LICENSED PROFESSIONAL IS ENGINEER, ARCHITECT, LANDSCAPE ARCHITECT OR LAND SURVEYOR SHALL STAMP THE DOCUMENT AND INCLUDE THE NOTATION 'ALTERED BY' FOLLOWED BY THEIR SIGNATURE, THE DATE OF SUCH ALTERATION, AND A SPECIFIC DESCRIPTION OF THE ALTERATION.

C:\Users\aschippers\Ducks Unlimited Incorporated\Iowa - Documents\Iowa\02_C3D Projects\IA-340-2 CREP PROJECTS\GREENE FTF2PATRICK\C3D_DRAWING\IA-340-100 Site Plan.dwg, 10/14/2026 9:53 AM, Andrew Schippers, TILE #1 PLAN & PROFILE, None

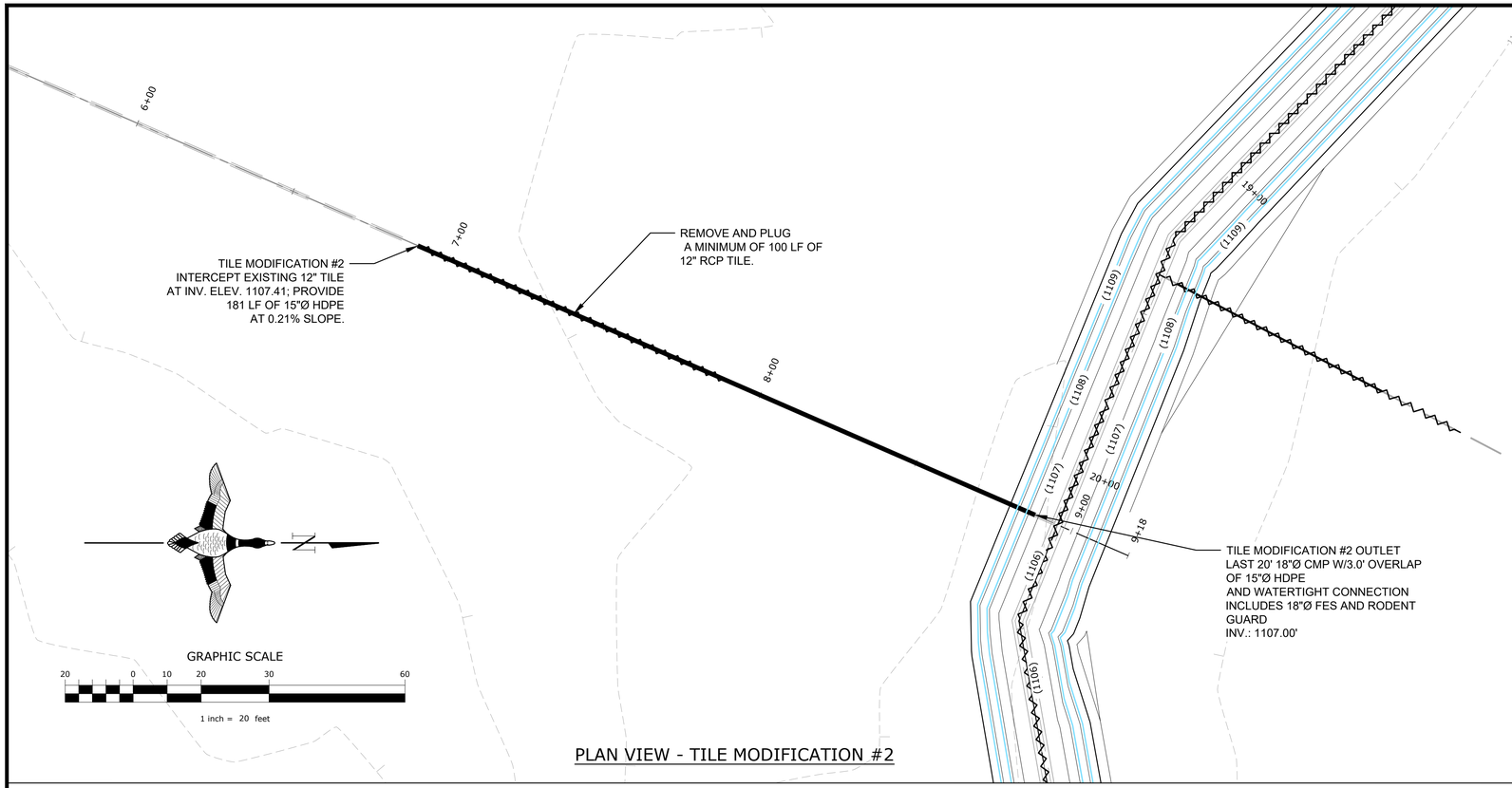

PLAN VIEW - TILE MODIFICATION #2

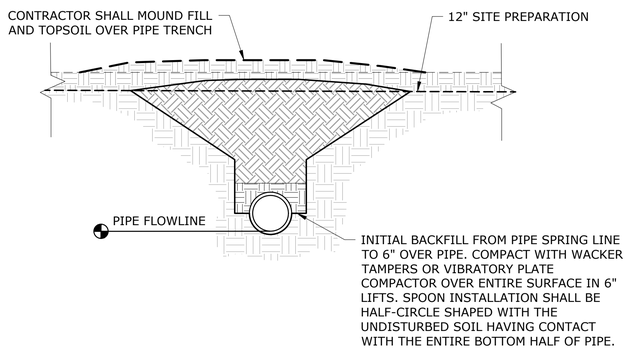

TILE PIPE BEDDING DETAIL

NOT TO SCALE

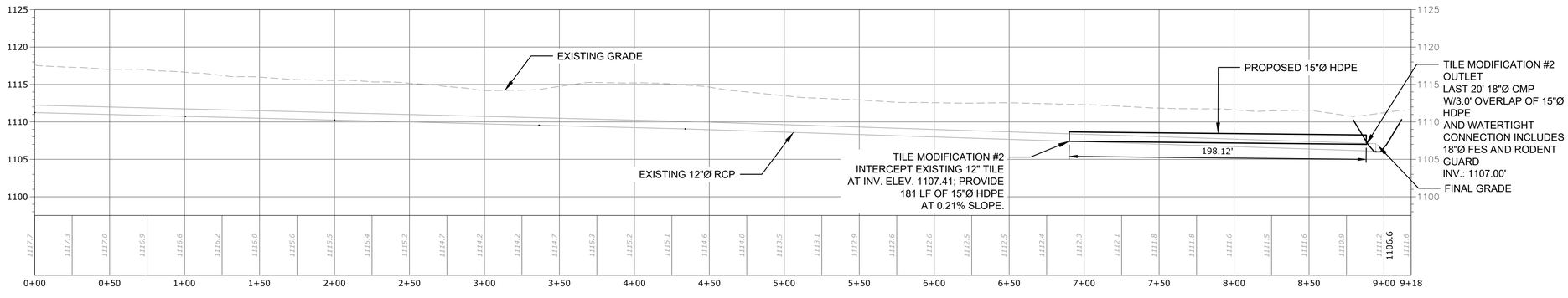

PROFILE - TILE MODIFICATION #2

HORIZONTAL SCALE

0 20 40 80

1 inch = 40 feet

VERTICAL SCALE

8 0 4 8 16

1 inch = 8 feet

GREAT LAKES/ATLANTIC REGIONAL OFFICE
7322 NEWMAN BOULEVARD, BUILDING 2, STE. 200
DEXTER, MICHIGAN 48130
(734) 623-2000
www.ducks.org
DUCKS UNLIMITED

AFFIX SEAL: DUCKS UNLIMITED, INC.

ON:

TILE #2 PLAN & PROFILE
PROJECT NO. GRE853129D
GREENE COUNTY
IOWA

Revision	Sheet	Revisions	Date	By
0	ALL	FINAL PLANS	2/20/2026	AS
1	ALL	IDALS REVIEW	7/16/26	AB
2	ALL	CHANNEL MODIFICATION	10-13-26	AS

CAD FILE:
IA-340-100 Site Plan

DESIGNED BY: AS & AB

DRAWN BY: GS & AS

SURVEYED BY: AS & AB

BIOLOGIST: HS

DATE:
10/13/26

PROJECT NUMBER:
US-IA-340-100

C205

NOTICE: CONSTRUCTION SITE SAFETY IS THE SOLE RESPONSIBILITY OF THE CONTRACTOR; DUCKS UNLIMITED, INC. SHALL NOT ASSUME ANY RESPONSIBILITY FOR THE SAFETY OF THE WORK PERFORMED, PERSONS ENGAGED IN THE WORK, NEARBY STRUCTURES, OR OF OTHER PERSONS ON-SITE. THE CONTRACTOR SHALL INDEMNIFY AND HOLD HARMLESS DUCKS UNLIMITED, INC. AND ITS AGENTS AND EMPLOYEES FROM AND AGAINST ALL CLAIMS, DAMAGES, LOSSES AND EXPENSES ARISING OUT OF OR RESULTING FROM THE PERFORMANCE OF THE WORK. THE CONTRACTOR SHALL NOTIFY DUCKS UNLIMITED, INC. IMMEDIATELY OF ANY HAZARDOUS CONDITIONS ENCOUNTERED. THIS PLAN, AS AN INSTRUMENT OF SERVICE, IS AND SHALL REMAIN THE PROPERTY OF DUCKS UNLIMITED, INC. THE DATA AND INFORMATION SHOWN ON OR CONTAINED IN THIS PLAN IS NOT TO BE USED, IN WHOLE OR IN PART, FOR ANY PURPOSE WITHOUT THE PRIOR WRITTEN CONSENT OF DUCKS UNLIMITED, INC. AS AN AUTHORIZED AGENT OF DUCKS UNLIMITED, INC., I HEREBY CERTIFY THAT THE DATA AND INFORMATION CONTAINED IN THIS PLAN WAS PREPARED UNDER MY DIRECT SUPERVISION AND TO THE BEST OF MY KNOWLEDGE AND BELIEF, REPRESENTS ACCURATELY THE CONDITIONS AT THE PROJECT SITE. DUCKS UNLIMITED, INC. MAKES NO REPRESENTATION, DATA AND INFORMATION IN THIS PLAN IS PROVIDED "AS IS" AND DUCKS UNLIMITED, INC. DISCLAIMS ANY AND ALL WARRANTIES, EXPRESS OR IMPLIED, WITH RESPECT TO THE ACCURACY OF THE DATA AND INFORMATION CONTAINED IN THIS PLAN. THE USER'S USE OF THIS MATERIAL, DATA AND INFORMATION, USER AGREES THAT DUCKS UNLIMITED, INC. IS NOT RESPONSIBLE FOR THEIR USE OF THE MATERIAL, DATA AND INFORMATION OR THE RESULTS THEREOF. IT IS VIOLATION OF LAW FOR ANY PERSON, UNLESS THEY ARE ACTING UNDER THE DIRECTION OF A LICENSED PROFESSIONAL ENGINEER, ARCHITECT, LANDSCAPE ARCHITECT OR LAND SURVEYOR, TO ALTER AN ITEM IN ANY WAY. IF AN ITEM BEARING THE STAMP OF A LICENSED PROFESSIONAL IS ALTERED, THE ALTERING ENGINEER, ARCHITECT, LANDSCAPE ARCHITECT OR LAND SURVEYOR SHALL STAMP THE DOCUMENT AND INCLUDE THE NOTATION "ALTERED BY" FOLLOWED BY THEIR SIGNATURE, THE DATE OF SUCH ALTERATION, AND A SPECIFIC DESCRIPTION OF THE ALTERATION.

C:\Users\aschippers\Ducks Unlimited Incorporated\Iowa - Documents\Iowa\02_C3D Projects\IA-340-2 CREP PROJECTS\GREENE FIT2PATRICK\C3D_DRAWING\IA-340-100 Site Plan.dwg, 10/14/2026 9:53 AM, Andrew Schippers, TILE #2 PLAN & PROFILE, None

NOTICE: CONSTRUCTION SITE SAFETY IS THE SOLE RESPONSIBILITY OF THE CONTRACTOR; DUCKS UNLIMITED, INC. SHALL NOT ASSUME ANY RESPONSIBILITY FOR THE SAFETY OF THE WORK PERFORMED, PERSONS ENGAGED IN THE WORK, NEARBY STRUCTURES, OR OF OTHER PERSONS ON-SITE. THE CONTRACTOR SHALL INDEMNIFY AND HOLD HARMLESS DUCKS UNLIMITED, INC. AND ITS AGENTS AND EMPLOYEES FROM AND AGAINST ALL CLAIMS, DAMAGES, LOSSES AND EXPENSES ARISING OUT OF OR RESULTING FROM THE CONTRACTOR'S PERFORMANCE OF THE WORK. THIS PLAN, AS AN INSTRUMENT OF SERVICE, IS AND SHALL REMAIN THE PROPERTY OF DUCKS UNLIMITED, INC. THIS PLAN IS NOT TO BE USED, IN WHOLE OR IN PART, FOR ANY PURPOSE OTHER THAN THE SPECIFIC PROJECT FOR WHICH IT WAS PREPARED AND DEVELOPED AS AN INSTRUMENT OF SERVICE. ANY USE OF THIS PLAN FOR ANY OTHER PURPOSE OR PROJECT, OR ANY MODIFICATION OF THIS PLAN WITHOUT THE PRIOR WRITTEN CONSENT OF DUCKS UNLIMITED, INC. IS UNAUTHORIZED. ANY AUTHORIZED USER OF THIS PLAN AGREES TO HOLD DUCKS UNLIMITED, INC. HARMLESS FROM ANY CLAIMS OR LIABILITY ARISING FROM SUCH UNAUTHORIZED USE. AUTHORIZED USERS ASSUME ALL RESPONSIBILITY FOR THE USE OF THIS PLAN AND ALL RELATED DATA AND INFORMATION, AND AGREE TO INDEMNIFY AND HOLD HARMLESS DUCKS UNLIMITED, INC. FROM ANY DAMAGES, LOSSES, OR EXPENSES ARISING FROM SUCH USE. BY USING ANY OF THIS MATERIAL, DATA AND INFORMATION, USER AGREES THAT DUCKS UNLIMITED, INC. IS NOT RESPONSIBLE FOR THEIR USE OF THE MATERIAL, DATA AND INFORMATION OR THE RESULTS THEREOF. IT IS YOUR RESPONSIBILITY TO VERIFY ALL INFORMATION BEFORE USING IT. ANY USE OF THIS MATERIAL, DATA AND INFORMATION IS AT YOUR SOLE RISK. BY USING ANY OF THIS MATERIAL, DATA AND INFORMATION, USER AGREES THAT DUCKS UNLIMITED, INC. IS NOT RESPONSIBLE FOR THEIR USE OF THE MATERIAL, DATA AND INFORMATION OR THE RESULTS THEREOF. IT IS YOUR RESPONSIBILITY TO VERIFY ALL INFORMATION BEFORE USING IT. ANY USE OF THIS MATERIAL, DATA AND INFORMATION IS AT YOUR SOLE RISK. BY USING ANY OF THIS MATERIAL, DATA AND INFORMATION, USER AGREES TO HOLD DUCKS UNLIMITED, INC. HARMLESS FROM ANY DAMAGES, LOSSES, OR EXPENSES ARISING FROM SUCH USE. THE USERS SOLE RISK. BY USING ANY OF THIS MATERIAL, DATA AND INFORMATION, USER AGREES THAT DUCKS UNLIMITED, INC. IS NOT RESPONSIBLE FOR THEIR USE OF THE MATERIAL, DATA AND INFORMATION OR THE RESULTS THEREOF. IT IS YOUR RESPONSIBILITY TO VERIFY ALL INFORMATION BEFORE USING IT. ANY USE OF THIS MATERIAL, DATA AND INFORMATION IS AT YOUR SOLE RISK. BY USING ANY OF THIS MATERIAL, DATA AND INFORMATION, USER AGREES TO HOLD DUCKS UNLIMITED, INC. HARMLESS FROM ANY DAMAGES, LOSSES, OR EXPENSES ARISING FROM SUCH USE. ALTERED, THE ALTERING ENGINEER, ARCHITECT, LANDSCAPE ARCHITECT OR LAND SURVEYOR SHALL STAMP THE DOCUMENT AND INCLUDE THE NOTATION "ALTERED BY" FOLLOWED BY THEIR SIGNATURE, THE DATE OF SUCH ALTERATION, AND A SPECIFIC DESCRIPTION OF THE ALTERATION.

C:\Users\aschippers\Ducks Unlimited Incorporated\Iowa - Documents\Iowa\02_C3D Projects\IA-340-2 CREP PROJECTS\GREENE FITZPATRICK\C3D_DRAWING\IA-340-109 Site Plan.dwg, 10/14/2026 9:54 AM, Andrew Schippers, TILE #3 PLAN & PROFILE, None

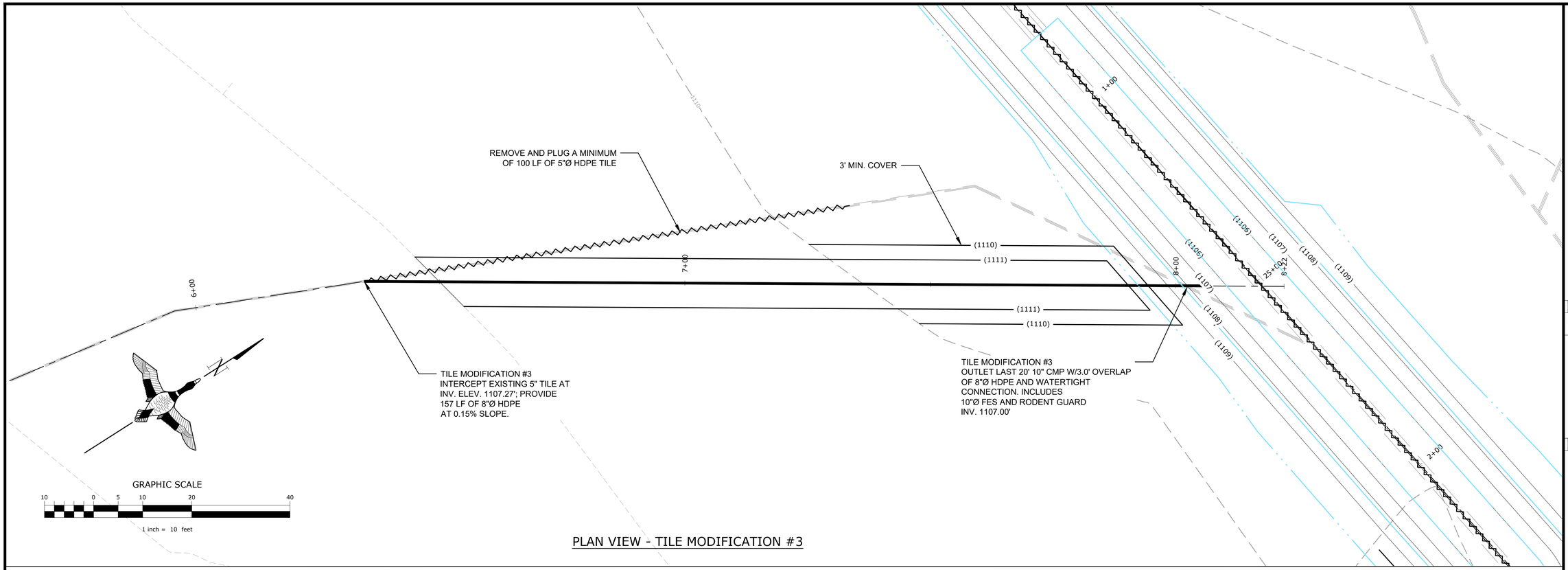

GRAPHIC SCALE

10 0 5 10 20 40

1 inch = 10 feet

PLAN VIEW - TILE MODIFICATION #3

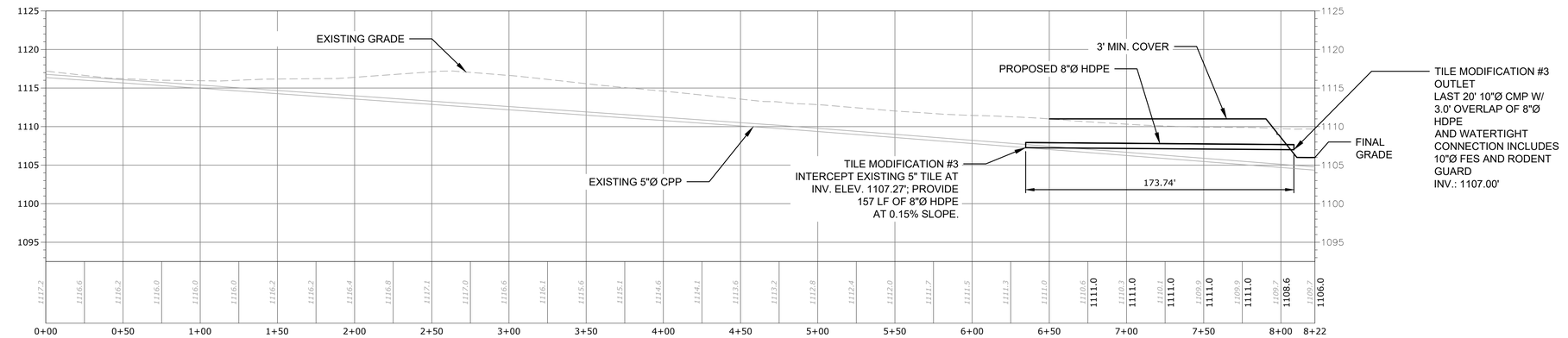

PROFILE - TILE MODIFICATION #3

HORIZONTAL SCALE

0 20 40 80

1 inch = 40 feet

VERTICAL SCALE

8 0 4 8 16

1 inch = 8 feet

GREAT LAKES/ATLANTIC REGIONAL OFFICE
7322 NEWMAN BOULEVARD, BUILDING 2, STE. 200
DEXTER, MICHIGAN 48130
(734) 623-2000
www.ducks.org
DUCKS UNLIMITED

AFFIX SEAL: DUCKS UNLIMITED, INC.

ON:

TILE #3 PLAN & PROFILE
PROJECT NO. GRE853129D
GREENE COUNTY
IOWA

Revision	Sheet	Revisions	Date	By
0	ALL	FINAL PLANS	2/20/2026	AS
1	ALL	IDALS REVIEW	7/16/26	AB
2	ALL	CHANNEL MODIFICATION	10-13-26	AS

CAD FILE: IA-340-100 Site Plan

DESIGNED BY: AS & AB

DRAWN BY: GS & AS

SURVEYED BY: AS & AB

BIOLOGIST: HS

DATE: 10/13/26

PROJECT NUMBER: US-IA-340-100

C206

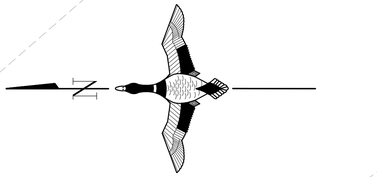

GRAPHIC SCALE

5 0 2.5 5 10 20

1 inch = 5 feet

PLAN VIEW - TILE MODIFICATION #4

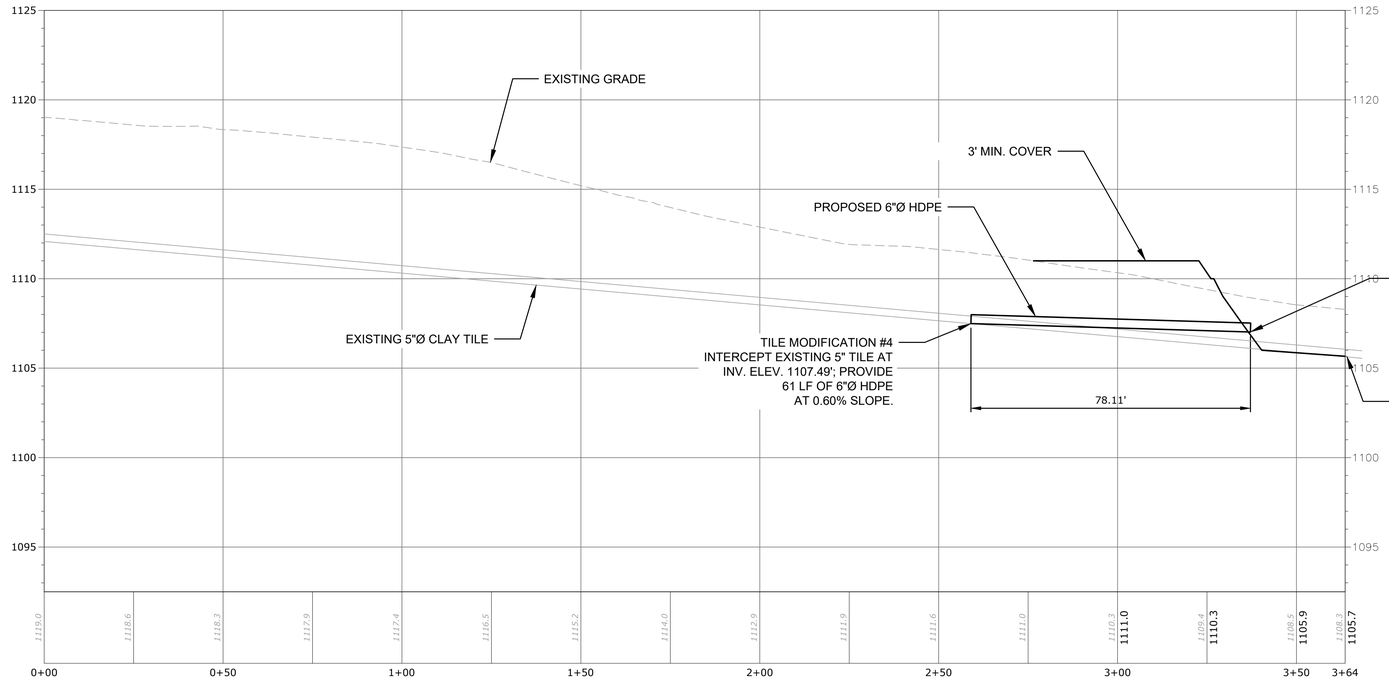

PROFILE - TILE MODIFICATION #4

HORIZONTAL SCALE

20 0 10 20 40

1 inch = 20 feet

VERTICAL SCALE

4 0 2 4 8

1 inch = 4 feet

GREAT LAKES/ATLANTIC REGIONAL OFFICE
7322 NEWMAN BOULEVARD, BUILDING 2, STE. 200
DEXTER, MICHIGAN 48130
(734) 623-2000
www.ducks.org

DUCKS UNLIMITED

AFFIX SEAL: DUCKS UNLIMITED, INC.

ON:

TILE #4 PLAN & PROFILE
PROJECT NO. GRE853129D
GREENE COUNTY
IOWA

Revision	Sheet	Revisions	Date	By
0	ALL	FINAL PLANS	2/20/2026	AS
1	ALL	IDALS REVIEW	7/16/26	AB
2	ALL	CHANNEL MODIFICATION	10-13-26	AS

CAD FILE: IA-340-100 Site Plan

DESIGNED BY: AS & AB

DRAWN BY: GS & AS

SURVEYED BY: AS & AB

BIOLOGIST: HS

DATE: 10/13/26

PROJECT NUMBER: US-IA-340-100

C207

NOTICE: CONSTRUCTION SITE SAFETY IS THE SOLE RESPONSIBILITY OF THE CONTRACTOR; DUCKS UNLIMITED, INC. SHALL NOT ASSUME ANY RESPONSIBILITY FOR THE SAFETY OF THE WORK PERFORMED, PERSONS ENGAGED IN THE WORK, NEARBY STRUCTURES, OR OF OTHER PERSONS ON-SITE. THE CONTRACTOR SHALL INDEMNIFY AND HOLD HARMLESS DUCKS UNLIMITED, INC. AND ITS AGENTS AND EMPLOYEES FROM AND AGAINST ANY AND ALL CLAIMS, DAMAGES, LOSSES, AND EXPENSES ARISING OUT OF OR RESULTING FROM THE PERFORMANCE OF THE WORK. THIS DOCUMENT IS THE PROPERTY OF DUCKS UNLIMITED, INC. AND IS NOT TO BE USED, IN WHOLE OR IN PART, FOR ANY PURPOSE WITHOUT THE PRIOR WRITTEN CONSENT OF AN AUTHORIZED AGENT OF DUCKS UNLIMITED, INC. DUCKS UNLIMITED, INC. MAKES NO REPRESENTATION, DATA AND INFORMATION IN THE PROJECT'S ENGINEERING PLANS AND SPECIFICATIONS FOR ANY PURPOSE OTHER THAN THE INTENDED USE IN THE PROJECT'S ENGINEERING PLANS AND SPECIFICATIONS. ANY USE OF THE PROJECT'S ENGINEERING PLANS AND SPECIFICATIONS OTHER THAN THE INTENDED USE IS AT THE USER'S SOLE RISK. BY USING ANY OF THIS MATERIAL, DATA AND INFORMATION, USER AGREES THAT DUCKS UNLIMITED, INC. IS NOT RESPONSIBLE FOR THEIR USE OF THE MATERIAL, DATA AND INFORMATION OR THE RESULTS THEREOF. IT IS VIOLATION OF LAW FOR ANY PERSON, UNLESS THEY ARE ACTING UNDER THE DIRECTION OF A LICENSED ARCHITECT, LANDSCAPE ARCHITECT OR LAND SURVEYOR TO ALTER AN ITEM IN ANY WAY. IF AN ITEM BEARING THE STAMP OF A LICENSED PROFESSIONAL IS ALTERED, THE ALTERING ENGINEER, ARCHITECT, LANDSCAPE ARCHITECT OR LAND SURVEYOR SHALL STAMP THE DOCUMENT AND INCLUDE THE NOTATION "ALTERED BY" FOLLOWED BY THEIR SIGNATURE, THE DATE OF SUCH ALTERATION, AND A SPECIFIC DESCRIPTION OF THE ALTERATION.

C:\Users\aschippers\Ducks Unlimited Incorporated\Iowa - Documents\Iowa\02_C3D Projects\IA-340-2 CREP PROJECTS\GREENE FIT2PATRICK\C3D_DRAWING\IA-340-100 Site Plan.dwg, 10/14/2026 9:54 AM, Andrew Schippers, TILE #4 PLAN & PROFILE, None

NOTICE: CONSTRUCTION SITE SAFETY IS THE SOLE RESPONSIBILITY OF THE CONTRACTOR; DUCKS UNLIMITED, INC. SHALL NOT ASSUME ANY RESPONSIBILITY FOR THE SAFETY OF THE WORK PERFORMED, PERSONS ENGAGED IN THE WORK, NEARBY STRUCTURES, OR OF OTHER PERSONS ON-SITE. THE CONTENTS OF THIS PLAN AND SPECIFICATIONS IS THE PROPERTY OF DUCKS UNLIMITED, INC. AND IS NOT TO BE USED, IN WHOLE OR IN PART, FOR ANY PURPOSE WITHOUT THE PRIOR WRITTEN CONSENT OF DUCKS UNLIMITED, INC. AN AUTHORIZED AGENT OF DUCKS UNLIMITED, INC. MAY REPRODUCE THESE PLANS AND SPECIFICATIONS FOR THE PURPOSE OF PERFORMING THE WORK DESCRIBED HEREIN. DUCKS UNLIMITED, INC. MAKES NO REPRESENTATION, EXPRESS OR IMPLIED, AS TO THE ACCURACY OR COMPLETENESS OF THE DATA AND INFORMATION CONTAINED IN THESE PLANS AND SPECIFICATIONS AND IS NOT RESPONSIBLE FOR THEIR USE OR THE RESULTS THEREOF. THE USER'S SOLE RISK. BY USING ANY OF THIS MATERIAL, DATA AND INFORMATION, USER AGREES THAT DUCKS UNLIMITED, INC. IS NOT RESPONSIBLE FOR THEIR USE OF THE MATERIAL, DATA AND INFORMATION OR THE RESULTS THEREOF. ANY ALTERATIONS MADE TO THESE PLANS AND SPECIFICATIONS MUST BE DIRECTED BY A LICENSED PROFESSIONAL ENGINEER, ARCHITECT, LANDSCAPE ARCHITECT OR LAND SURVEYOR. IF THESE PLANS AND SPECIFICATIONS ARE ALTERED, THE ALTERING ENGINEER, ARCHITECT, LANDSCAPE ARCHITECT OR LAND SURVEYOR SHALL STAMP THE DOCUMENT AND INCLUDE THE NOTATION "ALTERED BY" FOLLOWED BY THEIR SIGNATURE, THE DATE OF SUCH ALTERATION; AND A SPECIFIC DESCRIPTION OF THE ALTERATION.

C:\Users\aschippers\Ducks Unlimited Incorporated\Iowa - Documents\Iowa\02_C3D Projects\IA-340-2 CREP PROJECTS\GREENE FIT2PATRICK\C3D_DRAWING\IA-340-109 Site Plan.dwg, 10/14/2026 9:54 AM, Andrew Schippers, TILE #5 PLAN & PROFILE, None

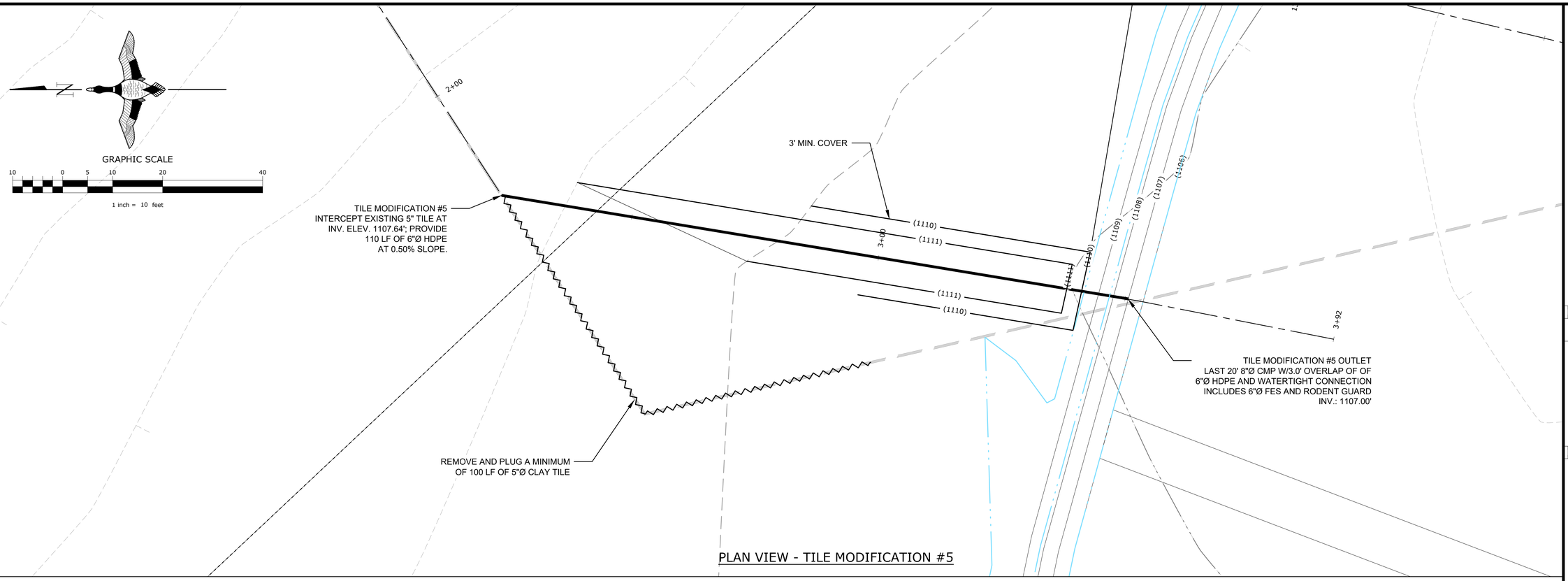

PLAN VIEW - TILE MODIFICATION #5

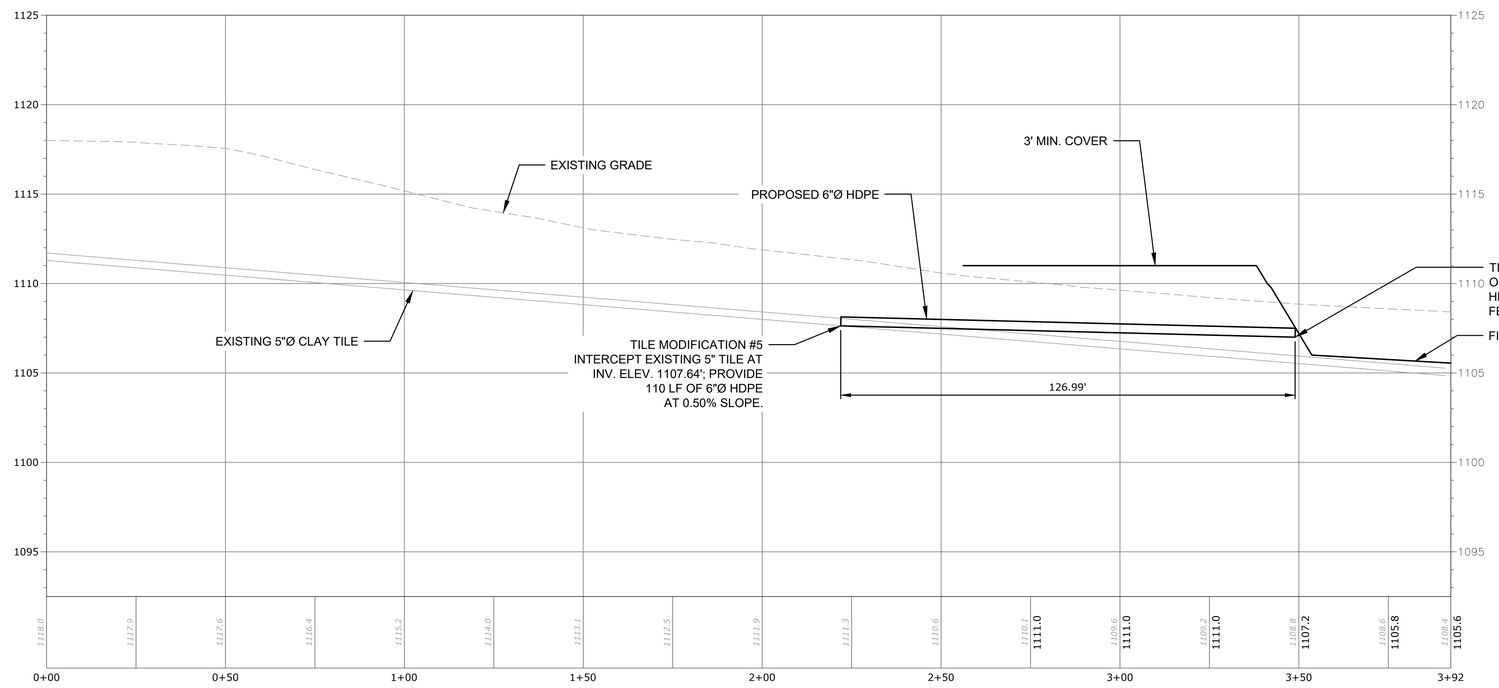

PROFILE - TILE MODIFICATION #5

HORIZONTAL SCALE
20 0 10 20 40
1 inch = 20 feet

VERTICAL SCALE
4 0 2 4 8
1 inch = 4 feet

DUCKS UNLIMITED
GREAT LAKES/ATLANTIC REGIONAL OFFICE
7322 NEWMAN BOULEVARD, BUILDING 2, STE. 200
DEXTER, MICHIGAN 48130
(734) 623-2000
www.ducks.org

AFFIX SEAL: DUCKS UNLIMITED, INC.

ON:

TILE #5 PLAN & PROFILE
PROJECT NO. GRE853129D
GREENE COUNTY
IOWA

Revision	Sheet	Revisions	Date	By
0	ALL	FINAL PLANS	2/20/2026	AS
1	ALL	IDALS REVIEW	7/16/26	AB
2	ALL	CHANNEL MODIFICATION	10-13-26	AS

CAD FILE: IA-340-100 Site Plan

DESIGNED BY: AS & AB

DRAWN BY: GS & AS

SURVEYED BY: AS & AB

BIOLOGIST: HS

DATE: 10/13/26

PROJECT NUMBER: US-IA-340-100

C208

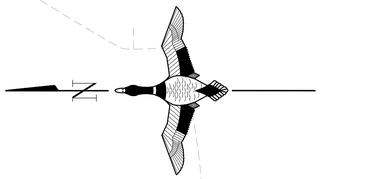

PLAN VIEW - TILE MODIFICATION #6

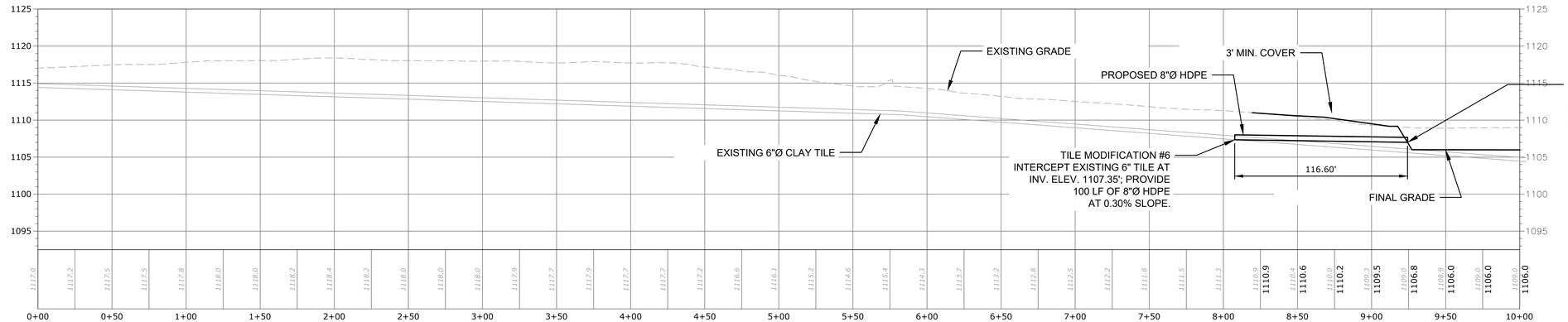

PROFILE - TILE MODIFICATION #6

HORIZONTAL SCALE

0 20 40 80

1 inch = 40 feet

VERTICAL SCALE

8 0 4 8 16

1 inch = 8 feet

GREAT LAKES/ATLANTIC REGIONAL OFFICE
7322 NEWMAN BOULEVARD, BUILDING 2, STE. 200
DEXTER, MICHIGAN 48130
(734) 623-2000
www.ducks.org
DUCKS UNLIMITED

AFFIX SEAL: DUCKS UNLIMITED, INC.

ON:

TILE #6 PLAN & PROFILE
PROJECT NO. GRE853129D
GREENE COUNTY
IOWA

Revision	Sheet	Revisions	Date	By
0	ALL	FINAL PLANS	2/20/2026	AS
1	ALL	IDALS REVIEW	7/16/26	AB
2	ALL	CHANNEL MODIFICATION	10-13-26	AS

CAD FILE: IA-340-100 Site Plan

DESIGNED BY: AS & AB

DRAWN BY: GS & AS

SURVEYED BY: AS & AB

BIOLOGIST: HS

DATE: 10/13/26

PROJECT NUMBER: US-IA-340-100

C209

NOTICE: CONSTRUCTION SITE SAFETY IS THE SOLE RESPONSIBILITY OF THE CONTRACTOR; DUCKS UNLIMITED, INC. SHALL NOT ASSUME ANY RESPONSIBILITY FOR THE SAFETY OF THE WORK PERFORMED, PERSONS ENGAGED IN THE WORK, NEARBY STRUCTURES, OR OF OTHER PERSONS ON-SITE. MAINTENANCE, DATA AND INFORMATION ON THE PROPERTY OF DUCKS UNLIMITED, INC. MAY NOT BE USED, OR REPRODUCED FOR ANY PURPOSE WITHOUT THE PRIOR WRITTEN CONSENT OF, AN AUTHORIZED AGENT OF, DUCKS UNLIMITED, INC. DUCKS UNLIMITED, INC. MAKES NO REPRESENTATIONS, EXPRESSED OR IMPLIED, AS TO THE ACCURACY OF THE INFORMATION CONTAINED ON THESE PLANS AND ASSUMES NO RESPONSIBILITY FOR ERRORS OR OMISSIONS IN THE INFORMATION PRESENTED. FURTHERMORE, DUCKS UNLIMITED, INC. IS NOT RESPONSIBLE FOR THE USE OF THE MATERIAL, DATA AND INFORMATION BY ANY ENTITY, AND NO ENTITY RELEASES DUCKS UNLIMITED, INC. FROM ANY LIABILITY RESULTING FROM THE USE OF THIS MATERIAL, DATA AND INFORMATION. ALL USERS ASSUME ALL RISKS RELATED TO THE USERS SOLE RISK. BY USING ANY OF THIS MATERIAL, DATA AND INFORMATION, USER AGREES THAT DUCKS UNLIMITED, INC. IS NOT RESPONSIBLE FOR THEIR USE OF THE MATERIAL, DATA AND INFORMATION OR THE RESULTS THEREOF. IT IS VIOLATION OF LAW FOR ANY PERSON, UNLESS THEY ARE ACTING UNDER THE DIRECTION OF A LICENSED PROFESSIONAL ENGINEER, ARCHITECT, LANDSCAPE ARCHITECT OR LAND SURVEYOR, TO ALTER ANY ITEM ON THIS PLAN IN ANY WAY. IF THIS PLAN IS ALTERED, THE ALTERING ENGINEER, ARCHITECT, LANDSCAPE ARCHITECT OR LAND SURVEYOR SHALL STAMP THE DOCUMENT AND INCLUDE THE NOTATION "ALTERED BY" FOLLOWED BY THEIR SIGNATURE, THE DATE OF SUCH ALTERATION, AND A SPECIFIC DESCRIPTION OF THE ALTERATION.

C:\Users\aschippers\Ducks Unlimited Incorporated\Iowa - Documents\Iowa\02_C3D Projects\IA-340-2 CREP PROJECTS\GREENE FIT2PATRICK\C3D_DRAWING\IA-340-100 Site Plan.dwg, 10/14/2026 9:54 AM, Andrew Schippers, TILE #6 PLAN & PROFILE, None

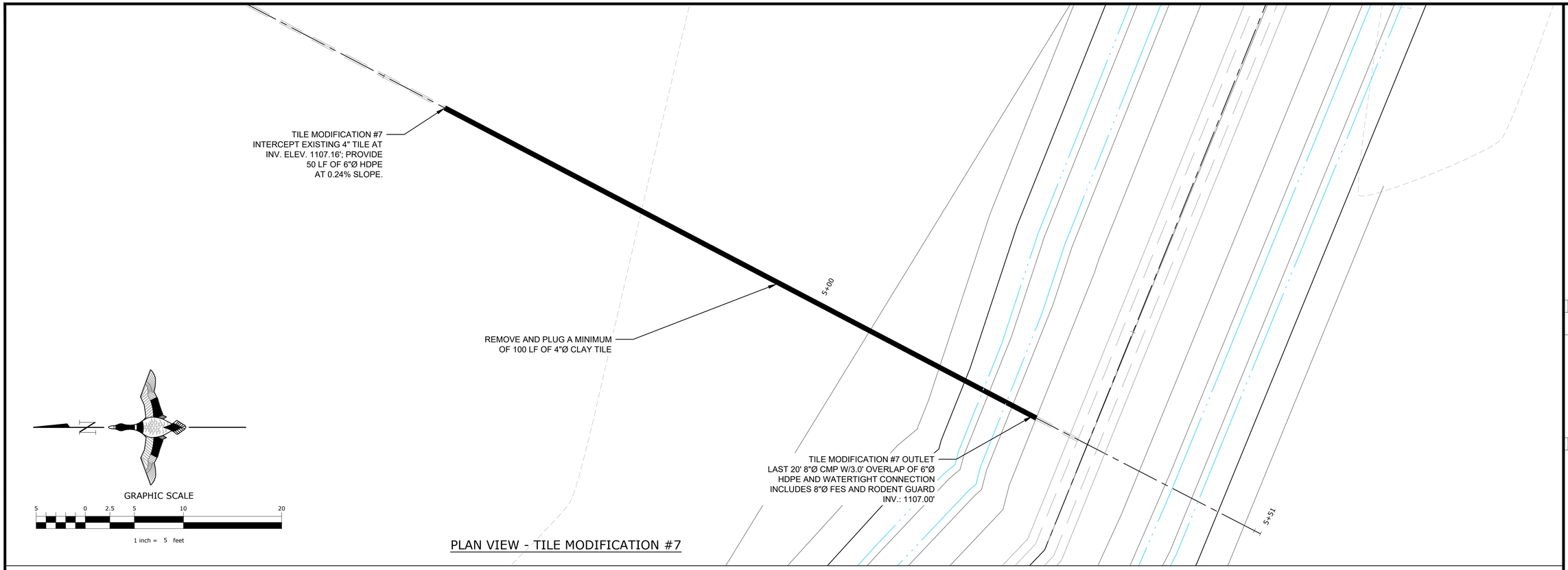

PLAN VIEW - TILE MODIFICATION #7

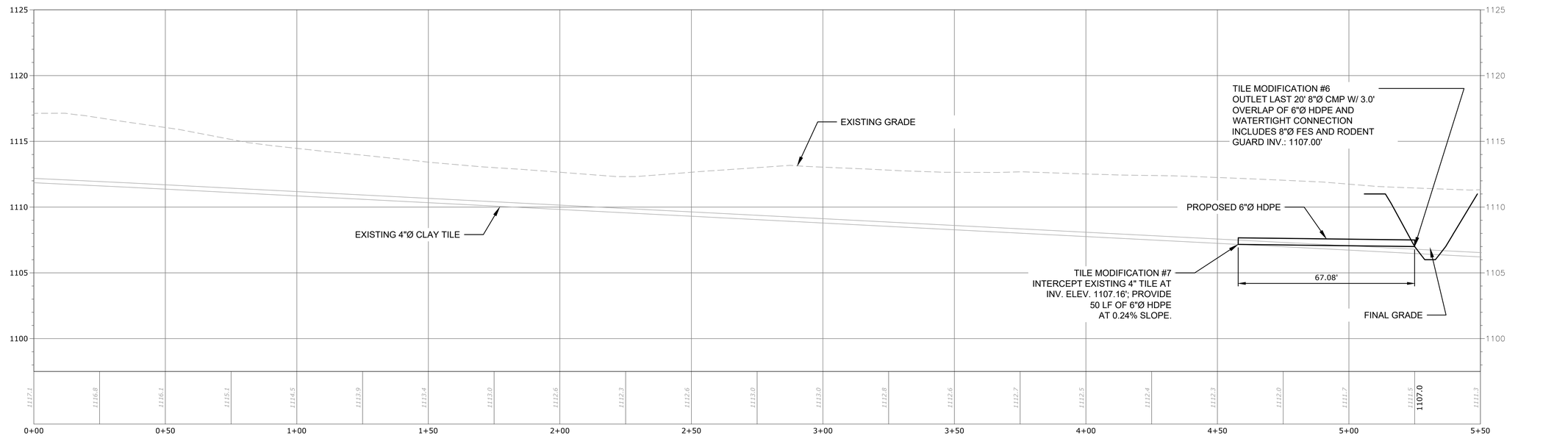

PROFILE - TILE MODIFICATION #7

HORIZONTAL SCALE

20 0 10 20 40

1 inch = 20 feet

VERTICAL SCALE

4 0 2 4 8

1 inch = 4 feet

GREAT LAKES/ATLANTIC REGIONAL OFFICE
7322 NEWMAN BOULEVARD, BUILDING 2, STE. 200
DEXTER, MICHIGAN 48130
(734) 623-2000
www.ducks.org
DUCKS UNLIMITED

AFFIX SEAL: DUCKS UNLIMITED, INC.

ON:

TILE #7 PLAN & PROFILE
PROJECT NO. GRE853129D
GREENE COUNTY
IOWA

Revision	Sheet	Revisions	Date	By
0	ALL	FINAL PLANS	2/20/2026	AS
1	ALL	IDALS REVIEW	7/16/26	AB
2	ALL	CHANNEL MODIFICATION	10-13-26	AS

CAD FILE:
IA-340-100 Site Plan

DESIGNED BY: AS & AB

DRAWN BY: GS & AS

SURVEYED BY: AS & AB

BIOLOGIST: HS

DATE:
10/13/26

PROJECT NUMBER:
US-IA-340-100

C210

NOTICE: CONSTRUCTION SITE SAFETY IS THE SOLE RESPONSIBILITY OF THE CONTRACTOR. DUCKS UNLIMITED, INC. SHALL NOT ASSUME ANY RESPONSIBILITY FOR THE SAFETY OF THE WORK PERFORMED, PERSONS ENGAGED IN THE WORK, NEARBY STRUCTURES, OR OF OTHER PERSONS ON-SITE. THIS MATERIAL, DATA AND INFORMATION IS THE PROPERTY OF DUCKS UNLIMITED, INC. IT MAY NOT BE USED OR REPRODUCED FOR ANY PURPOSE WITHOUT THE PRIOR WRITTEN CONSENT OF AN AUTHORIZED AGENT OF DUCKS UNLIMITED, INC. DUCKS UNLIMITED, INC. MAKES NO REPRESENTATION OR WARRANTY OF ANY KIND REGARDING THIS MATERIAL, DATA AND INFORMATION, INCLUDING, BUT NOT LIMITED TO, THE ACCURACY OF THE MATERIAL, DATA AND INFORMATION OR ITS SUITABILITY FOR ANY PURPOSE. ALL USE OF THE MATERIAL, DATA AND INFORMATION IS AT THE USER'S SOLE RISK. BY USING ANY OF THIS MATERIAL, DATA AND INFORMATION, USER AGREES THAT DUCKS UNLIMITED, INC. IS NOT RESPONSIBLE FOR THEIR USE OF THE MATERIAL, DATA AND INFORMATION OR THE RESULTS THEREOF. IT IS A VIOLATION OF LAW FOR ANY PERSON, UNLESS THEY ARE ACTING UNDER THE DIRECTION OF A LICENSED PROFESSIONAL ENGINEER, ARCHITECT, LANDSCAPE ARCHITECT OR LAND SURVEYOR, TO ALTER AN ITEM IN ANY WAY. IF AN ITEM BEARING THE STAMP OF A LICENSED PROFESSIONAL IS ALTERED, THE ALTERING ENGINEER, ARCHITECT, LANDSCAPE ARCHITECT OR LAND SURVEYOR SHALL STAMP THE DOCUMENT AND INCLUDE THE NOTATION "ALTERED BY" FOLLOWED BY THEIR SIGNATURE, THE DATE OF SUCH ALTERATION, AND A SPECIFIC DESCRIPTION OF THE ALTERATION.

C:\Users\aschippers\Ducks Unlimited Incorporated\Iowa - Documents\Iowa\02_C3D Projects\IA-340-2 CREP PROJECTS\GREENE FITZPATRICK\C3D_DRAWING\IA-340-100 Site Plan.dwg, 10/14/2026 9:54 AM, Andrew Schippers, TILE #7 PLAN & PROFILE, None

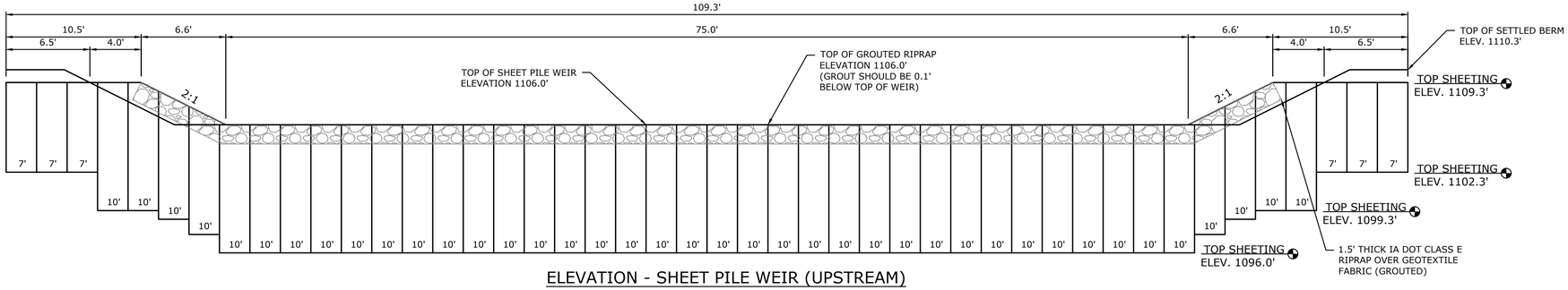

ELEVATION - SHEET PILE WEIR (UPSTREAM)

SCALE: 1"=5'

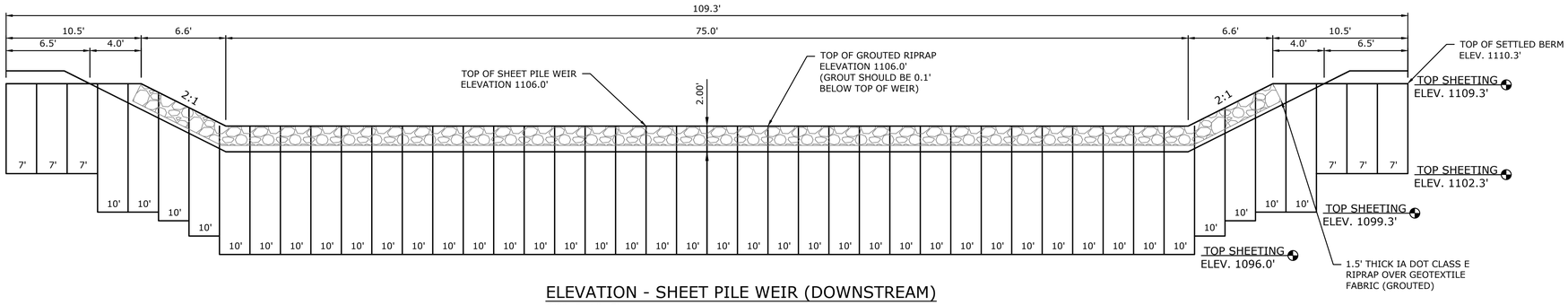

ELEVATION - SHEET PILE WEIR (DOWNSTREAM)

SCALE: 1"=5'

RECOMMENDED SHEET PILE:

1. TYPE: SCZ 21N (OR APPROVED EQUAL)
2. SECTION MODULUS: 21.43 IN^3/FT.
3. THICKNESS: 0.375 IN
4. STEEL GRADE: 50 KSI
5. DETAILS BASED ON 28.5" WIDE SHEETS

NOTES:

1. ALL WELDS TO BE ¼" FILLET WELDS.
2. TOP OF SHEET PILE SHALL BE TRIMMED TO GRADES INDICATED ON PLANS TO REMOVE ANY DAMAGED CAUSED BY DRIVING.
3. ABOVE ELEVATION 1090.0', PILE CAP NOT BE WATERTIGHT. WELDS SHALL CONSIST OF 6" BEAD AT 18" C-C (12" BETWEEN WELDS).
4. CAP SHALL END 6" INTO EMBANKMENT

NOTE:
ALL WELDS AT OR BELOW ELEV. 1090.0' SHALL BE CONTINUOUS, WATERTIGHT, AND SUBJECT TO LAMPING TO ENSURE WATERTIGHT SEAL.

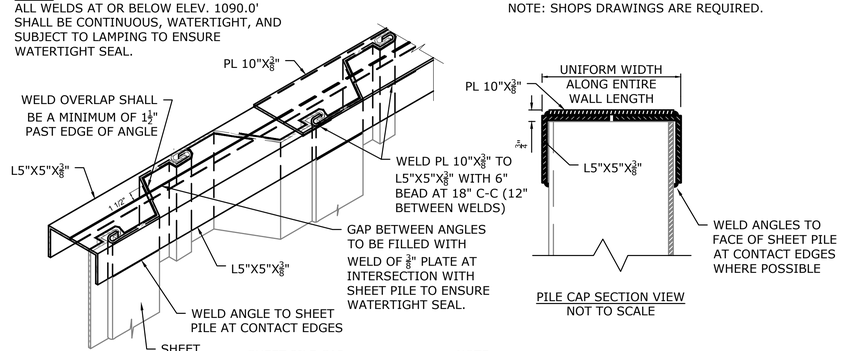

SHEET PILE CAP
FABRICATION DETAIL
NOT TO SCALE

SHEET PILE MINIMUM DESIGN CRITERIA:

1. TYPE: SCZ
2. SECTION MODULUS: 0.8 IN^3/FT.
3. THICKNESS: 0.25 IN
4. MOMENT OF INERTIA: 1.7 IN^4/FT.
5. STEEL GRADE: 50 KSI

NOTE: SHOPS DRAWINGS ARE REQUIRED.

PILE CAP SECTION VIEW
NOT TO SCALE

NOTE:
CAP WIDTH VARIES DEPENDING ON ALIGNMENT OF SHEET PILE WALL. HOWEVER, ONCE THE APPROPRIATE WIDTH IS DETERMINED, IT SHALL REMAIN UNIFORM ALONG ENTIRE LENGTH OF WALL

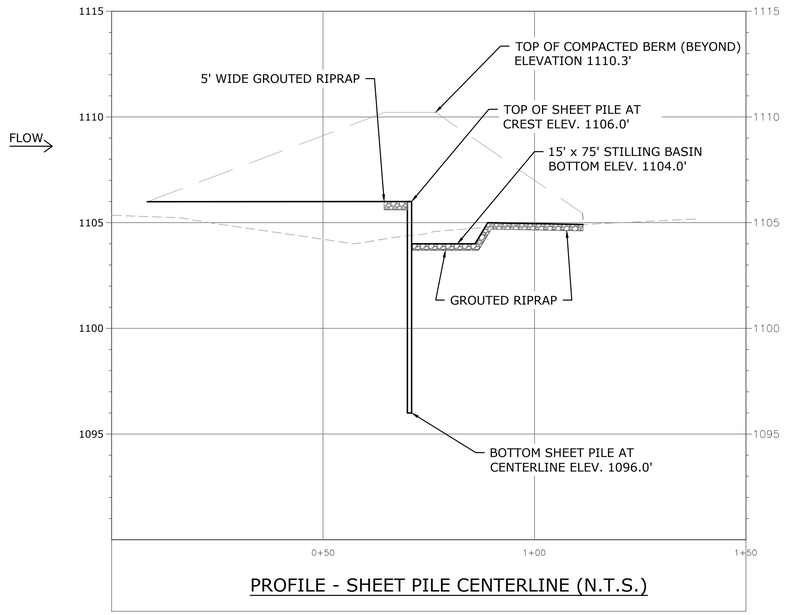

PROFILE - SHEET PILE CENTERLINE (N.T.S.)

NOTICE: CONSTRUCTION SITE SAFETY IS THE SOLE RESPONSIBILITY OF THE CONTRACTOR. DUCKS UNLIMITED, INC. SHALL NOT ASSUME ANY RESPONSIBILITY FOR THE SAFETY OF THE WORK PERFORMED, PERSONS ENGAGED IN THE WORK, NEARBY STRUCTURES, OR OF OTHER PERSONS ON-SITE. THESE PLANS, DATA AND INFORMATION IS THE PROPERTY OF DUCKS UNLIMITED, INC. AND MAY NOT BE USED, OR REPRODUCED IN ANY MANNER WITHOUT THE PRIOR WRITTEN CONSENT OF AN AUTHORIZED AGENT OF DUCKS UNLIMITED, INC. FOR ANY PURPOSE. DUCKS UNLIMITED, INC. MAKES NO REPRESENTATIONS AS TO THE ACCURACY, COMPLETENESS, SUITABILITY, OR VALIDITY OF ANY INFORMATION CONTAINED HEREIN AND IS NOT RESPONSIBLE FOR ANY ERRORS OR OMISSIONS OR FOR THE RESULTS OBTAINED FROM THE USE OF SUCH INFORMATION. ANY RELIANCE ON THIS INFORMATION IS AT THE USERS SOLE RISK. BY USING ANY OF THIS MATERIAL, DATA AND INFORMATION, USER AGREES THAT DUCKS UNLIMITED, INC. IS NOT RESPONSIBLE FOR THEIR USE OF THE MATERIAL, DATA AND INFORMATION OR THE RESULTS THEREOF. IT IS A VIOLATION OF LAW FOR ANY PERSON, UNLESS THEY ARE ACTING UNDER THE DIRECTION OF A LICENSED PROFESSIONAL ENGINEER, ARCHITECT, OR LANDSCAPE ARCHITECT, TO ALTER THIS ITEM. IF THIS ITEM HAS BEEN ALTERED, THE ALTERING ENGINEER, ARCHITECT, LANDSCAPE ARCHITECT OR LAND SURVEYOR SHALL STAMP THE DOCUMENT AND INCLUDE THE NOTATION "ALTERED BY" FOLLOWED BY THEIR SIGNATURE, THE DATE OF SUCH ALTERATION, AND A SPECIFIC DESCRIPTION OF THE ALTERATION.

C:\Users\jschippers\Ducks Unlimited Incorporated\Iowa - Documents\Iowa\02_C3D Projects\IA-340-2 CREP PROJECTS\GREENE FITZPATRICK\C3D_DRAWINGS\IA-340-100 DETAILS.dwg, 10/14/2026 9:54 AM, Andrew Schippers, SHEET PILE DETAILS, None

GREAT LAKES/ATLANTIC REGIONAL OFFICE
7322 NEWMAN BOULEVARD, BUILDING 2, STE. 200
DEXTER, MICHIGAN 48130
(734) 623-2000
www.ducks.org
DUCKS UNLIMITED

AFFIX SEAL: DUCKS UNLIMITED, INC.

ON:

SHEET PILE DETAILS
PROJECT NO. GRE853129D
GREENE COUNTY
IOWA

Revision	Sheet	Revisions	Date	By
0	ALL	FINAL PLANS	2/20/2026	AS
1	ALL	IDALS REVIEW	7/16/26	AB
2	ALL	CHANNEL MODIFICATION	10-13-26	AS

CAD FILE:
IA-340-100 DETAILS

DESIGNED BY: AS & AB
DRAWN BY: GS & AS
SURVEYED BY: AS & AB
BIOLOGIST: HS

DATE:
10/13/26

PROJECT NUMBER:
US-IA-340-100

C301

NOTE:
BERM SHALL BE OVERBUILT BY 5% (1110.6'), SO
THAT THE SETTLED TOP OF BERM WILL BE 1110.3'

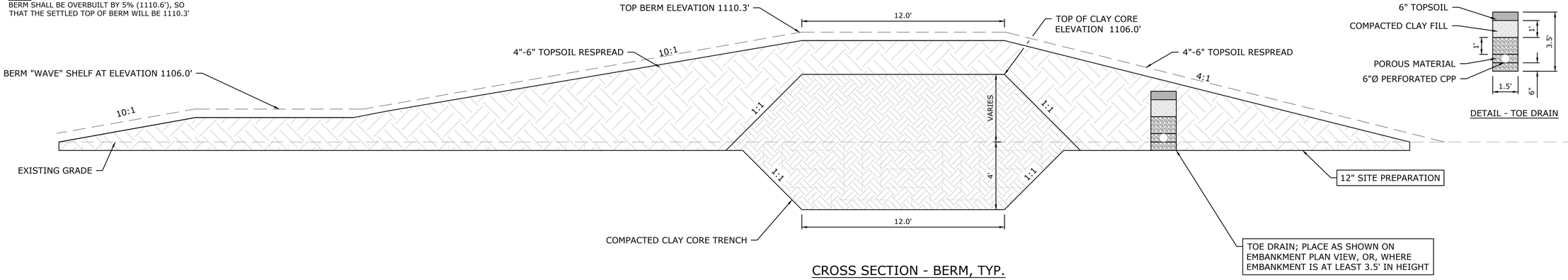

CROSS SECTION - BERM, TYP.

DETAIL - TOE DRAIN

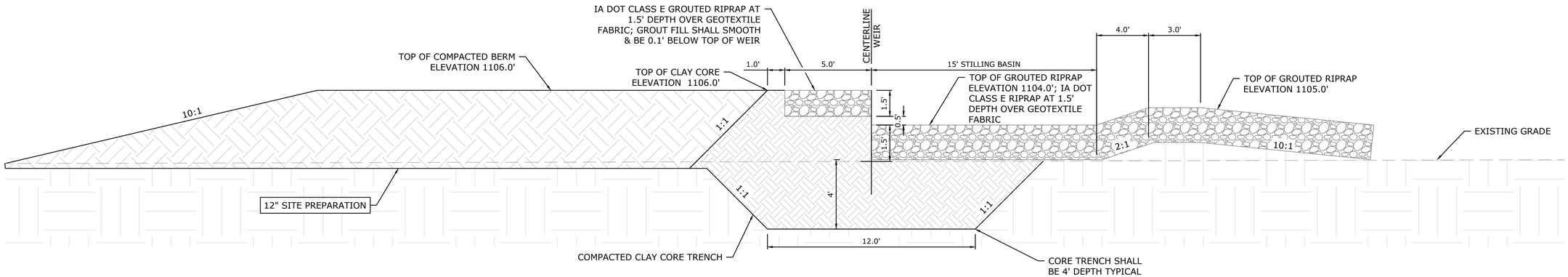

CROSS SECTION - BERM AT PRIMARY WEIR, TYP.

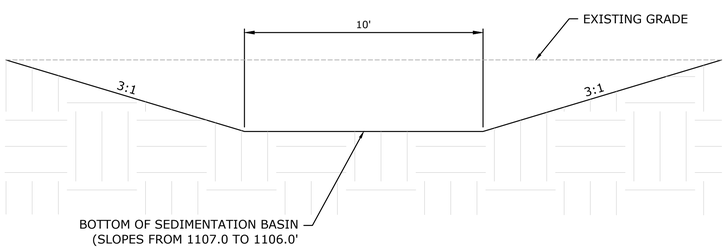

CROSS SECTION - CHANNEL, TYP.

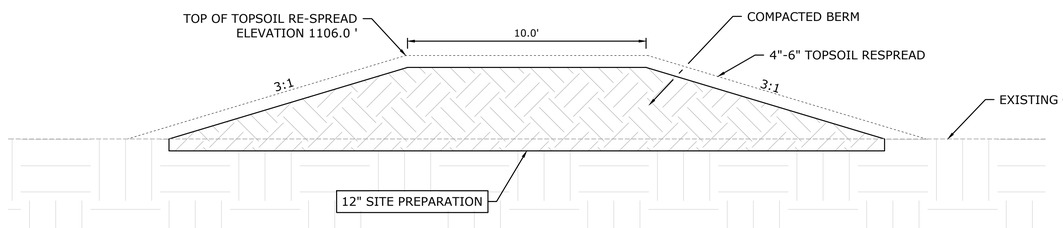

CROSS SECTION - SUBMERGED BERM, TYP.

GRAPHIC SCALE

3 0 1.5 3 6 12

1 inch = 3 feet

GREAT LAKES/ATLANTIC REGIONAL OFFICE
7322 NEWMAN BOULEVARD, BUILDING 2, STE. 200
DEXTER, MICHIGAN 48130
(734) 623-2000
www.ducks.org

DUCKS UNLIMITED

AFFIX SEAL: DUCKS UNLIMITED, INC.

ON:

CONSTRUCTION DETAILS
PROJECT NO. GRE853129D
GREENE COUNTY
IOWA

Revision	Sheet	Revisions	Date	By
0	ALL	FINAL PLANS	2/20/2026	AS
1	ALL	IDALS REVIEW	7/16/26	AB
2	ALL	CHANNEL MODIFICATION	10-13-26	AS

CAD FILE:
IA-340-100 DETAILS

DESIGNED BY: AS & AB
DRAWN BY: GS & AS
SURVEYED BY: AS & AB
BIOLOGIST: HS
DATE:
10/13/26
PROJECT NUMBER:
US-IA-340-100

C302

NOTICE: CONSTRUCTION SITE SAFETY IS THE SOLE RESPONSIBILITY OF THE CONTRACTOR; DUCKS UNLIMITED, INC. SHALL NOT ASSUME ANY RESPONSIBILITY FOR THE SAFETY OF THE WORK PERFORMED, PERSONS ENGAGED IN THE WORK, NEARBY STRUCTURES, OR OF OTHER PERSONS ON-SITE. THE PROPERTY RIGHTS IN THE PROPERTY DESIGNS, DRAWINGS AND SPECIFICATIONS ORIGINATED BY DUCKS UNLIMITED, INC. (DUCKS) ARE AND SHALL REMAIN THE PROPERTY OF DUCKS. UNLIMITED, INC. MAKES NO REPRESENTATION, EXPRESS OR IMPLIED, AS TO THE ACCURACY OR COMPLETENESS OF THE MATERIAL, DATA AND INFORMATION CONTAINED IN THIS DOCUMENT AND DUCKS UNLIMITED, INC. WILL NOT BE USED OR REPRODUCED FOR ANY PURPOSE WITHOUT THE PRIOR WRITTEN CONSENT OF ITS AUTHORIZED AGENT OF DUCKS UNLIMITED, INC. AND ANY USE OF SUCH MATERIAL, DATA AND INFORMATION IS AT THE USER'S SOLE RISK. BY USING ANY OF THIS MATERIAL, DATA AND INFORMATION, USER AGREES THAT DUCKS UNLIMITED, INC. IS NOT RESPONSIBLE FOR THEIR USE OF THE MATERIAL, DATA AND INFORMATION OR THE RESULTS THEREOF. IT IS UNLAWFUL FOR ANY PERSON, UNLESS THEY ARE ACTING UNDER THE DIRECTION OF A LICENSED PROFESSIONAL IS ENGINEER, ARCHITECT, LANDSCAPE ARCHITECT OR LAND SURVEYOR, TO ALTER THIS DOCUMENT. IF THIS DOCUMENT IS ALTERED, THE ALTERING ENGINEER, ARCHITECT, LANDSCAPE ARCHITECT OR LAND SURVEYOR SHALL STAMP THE DOCUMENT AND INCLUDE THE NOTATION "ALTERED BY" FOLLOWED BY THEIR SIGNATURE, THE DATE OF SUCH ALTERATION, AND A SPECIFIC DESCRIPTION OF THE ALTERATION.

C:\Users\aschippers\Ducks Unlimited Incorporated\Iowa - Documents\Iowa\02_C3D Projects\IA-340-2 CREP PROJECTS\GREENE FITZPATRICK\C3D_DRAWING\IA-340-100 DETAILS.dwg, 10/14/2026 9:54 AM, Andrew Schippers, CONSTRUCTION DETAILS, None

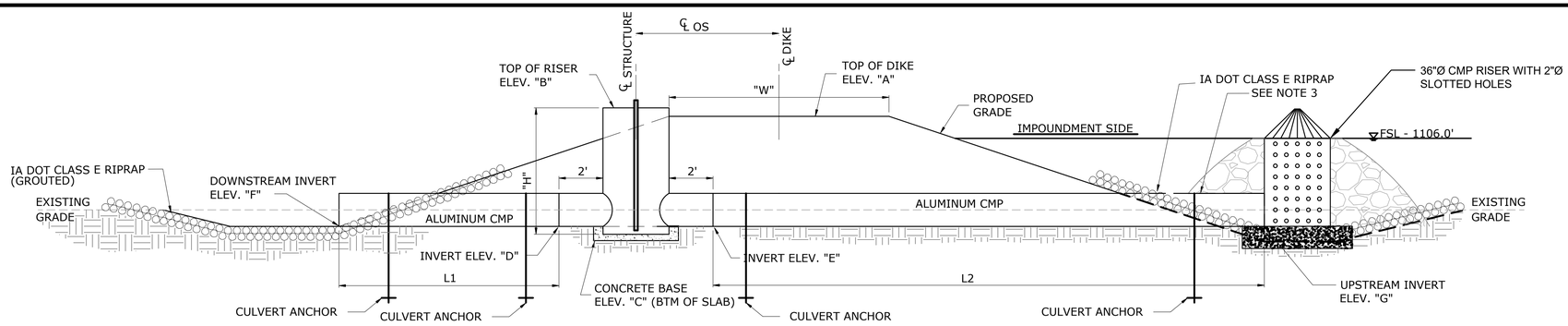

PROFILE OF ALUMINUM CMP WATER CONTROL STRUCTURE

NOT TO SCALE

STRUCTURE	PIPE		RISER		TOP OF DIKE EL. "A"	TOP OF RISER EL. "B"	CONCRETE BASE EL "C"	INLET I.E. EL. "D"	OUTLET I.E. EL. "E"	UPSTREAM INV. "G"	DOWNSTREAM INV. "F"	TOP WIDTH "W"	INLET LENGTH "LI"	OUTLET LENGTH "L2"	℄ -℄ OFFSET	RISER HEIGHT "H"	NO. OF STOPLOGS
	SIZE	GA.	SIZE	GA.													
WCS 1	15"	12	48"	12	1110.3'	1110.0'	1103.5'	1104.0'	1104.0'	1104.0'	1104.0'	12'	76'	18'	8'	6.5	13

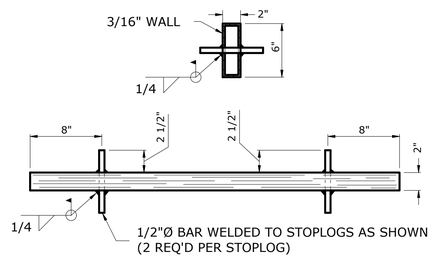

NOTE: 1. WELD 1/2Ø BAR IN STOPLOGS.

2. STOPLOGS SHALL BE 1" SHORTER THAN WIDTH BETWEEN STOPLOG GUIDES.

3. FABRICATOR TO PROVIDE 1-2" & 1-3" STOPLOG IN ADDITION TO STOPLOGS SPECIFIED.

ALUMINUM STOPLOG DETAIL

NOT TO SCALE

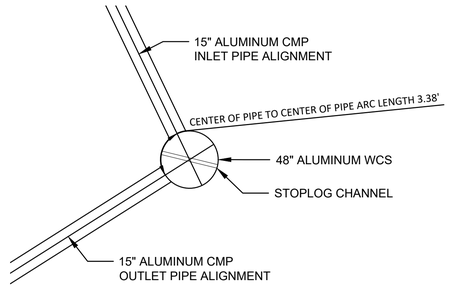

48"Ø ALUMINUM WCS PLAN VIEW

NOT TO SCALE

NOTES:

1. "H" INCLUDES 0.5' OF RISER EMBEDDED IN CONCRETE
2. ALL METAL PIPE SHALL BE CONNECTED WITH FLANGE COUPLERS
3. DOWNSTREAM PIPE OUTLET SHALL CONFORM TO SLOPE FOR PIPE DIAMETERS 30" AND LARGER
4. INLET AND/OR OUTLET PIPES GREATER THAN 20 LF. SHALL BE FABRICATED USING MULTIPLE SECTIONS NOT TO EXCEED 20 LF., CONNECTED W/ FLANGE COUPLERS. A FULL 20' SECTION MUST BE UTILIZED AS THE END SECTION OF PIPE.
5. CONTRACTOR SHALL FIELD CHECK ALL EXISTING ELEVATIONS PRIOR TO CONSTRUCTION AND MAKE ADJUSTMENTS, IF NEEDED.
6. BITUMINOUS COATING SHALL BE APPLIED TO ALUMINUM/METAL SURFACES THAT WILL BE IN CONTACT WITH CONCRETE.

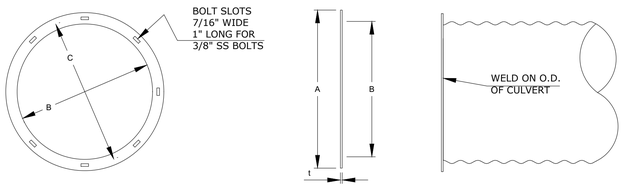

BASIC SIZE IN.	ALUM.	O.D. (A) FLANGE	I.D. (B) FLANGE	NO. HOLES	BOLT CIR. DIA. (C)	GASKET NO SECT
6	3/16	10	6	6	8	1
8	3/16	12	8	6	10	1
12	3/16	16	12	10	14	1
15	3/16	19	15	12	17	1
18	3/16	22	18	14	20	1
21	3/16	25	21	16	23	1
24	3/16	28	24	18	26	1
30	3/16	34	30	22	32	2
36	3/16	40	36	26	38	2
42	1/4	46	42	30	44	2
48	1/4	52	48	34	50	2

NOTES: 1. 6"- 36" FLANGES CUT FROM 3/16 ALUMINUM PLATE.

2. GASKETS DIE CUT FROM 1/8" PVC NITRILE FOAM ENSOLITE AND MATCHED TO CORRESPONDING FLANGE DIMENSIONS (BXD)(E) & NO HOLES.

3. 2 WASHERS PER SLOT.

FLANGE COUPLER DETAIL

NOT TO SCALE

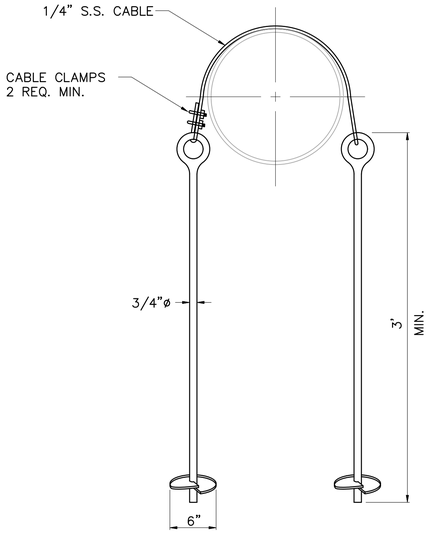

CULVERT ANCHOR

NOT TO SCALE

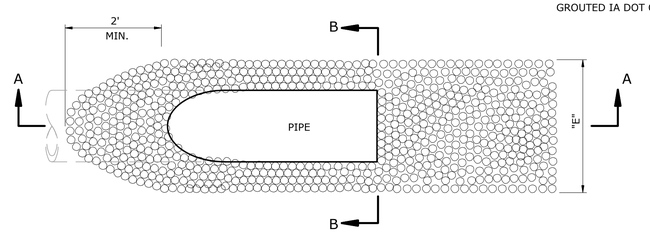

PLAN VIEW

SECTION B-B

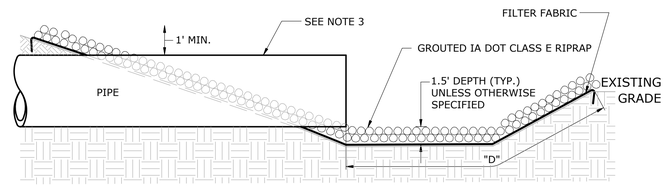

SECTION A-A

NOTES:

1. IF THE RIPRAP CLASS DESIGNATION IS NOT SPECIFIED ON THE CONSTRUCTION PLANS, IA DOT CLASS E RIPRAP SHALL BE UTILIZED. THE ROCK SHALL BE APPROVED BY THE ENGINEER PRIOR TO INSTALLATION.
2. UNLESS OTHERWISE SPECIFIED, FILTER FABRIC SHALL BE UTILIZED IN THE INSTALLATION OF RIPRAP.
3. DOWNSTREAM CMP PIPE OUTLET SHALL CONFORM TO SLOPE FOR PIPE DIAMETERS 30" AND LARGER.

OUTLET AND RIPRAP DETAIL

NOT TO SCALE

NOTICE: CONSTRUCTION SITE SAFETY IS THE SOLE RESPONSIBILITY OF THE CONTRACTOR. DUCKS UNLIMITED, INC. SHALL NOT ASSUME ANY RESPONSIBILITY FOR THE SAFETY OF THE WORK PERFORMED, PERSONS ENGAGED IN THE WORK, NEARBY STRUCTURES, OR OF OTHER PERSONS ON-SITE. THE PROPERTY, PLANS AND INFORMATION AS THE PROPERTY OF DUCKS UNLIMITED, INC. AND MAY NOT BE USED OR REPRODUCED FOR ANY PURPOSE WITHOUT THE PRIOR WRITTEN CONSENT OF AN AUTHORIZED AGENT OF DUCKS UNLIMITED, INC. ANY REUSE OF THIS MATERIAL, DATA AND INFORMATION, USER AGREES THAT DUCKS UNLIMITED, INC. IS NOT RESPONSIBLE FOR THEIR USE OF THE MATERIAL, DATA AND INFORMATION OR THE RESULTS THEREOF. USER AGREES TO INDEMNIFY AND HOLD HARMLESS DUCKS UNLIMITED, INC. FROM ANY CLAIMS, LOSSES, DAMAGES, LIABILITIES OR EXPENSES ARISING OUT OF OR RESULTING THEREFROM. ANY ALTERATION MADE TO THESE PLANS BY ANYONE OTHER THAN A LICENSED PROFESSIONAL IS AT THE USERS SOLE RISK. BY USING ANY OF THIS MATERIAL, DATA AND INFORMATION, USER AGREES THAT DUCKS UNLIMITED, INC. IS NOT RESPONSIBLE FOR THEIR USE OF THE MATERIAL, DATA AND INFORMATION OR THE RESULTS THEREOF. USER AGREES TO INDEMNIFY AND HOLD HARMLESS DUCKS UNLIMITED, INC. FROM ANY CLAIMS, LOSSES, DAMAGES, LIABILITIES OR EXPENSES ARISING OUT OF OR RESULTING THEREFROM. ANY ALTERATION MADE TO THESE PLANS BY ANYONE OTHER THAN A LICENSED PROFESSIONAL IS AT THE USERS SOLE RISK. BY USING ANY OF THIS MATERIAL, DATA AND INFORMATION,

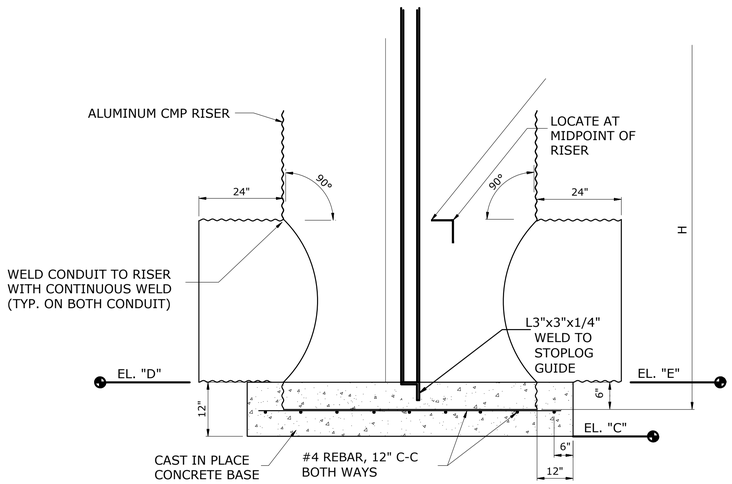

* SEE TABLE

TYP GATE ALUMINUM CMP CONTROL STRUCTURE

NOT TO SCALE

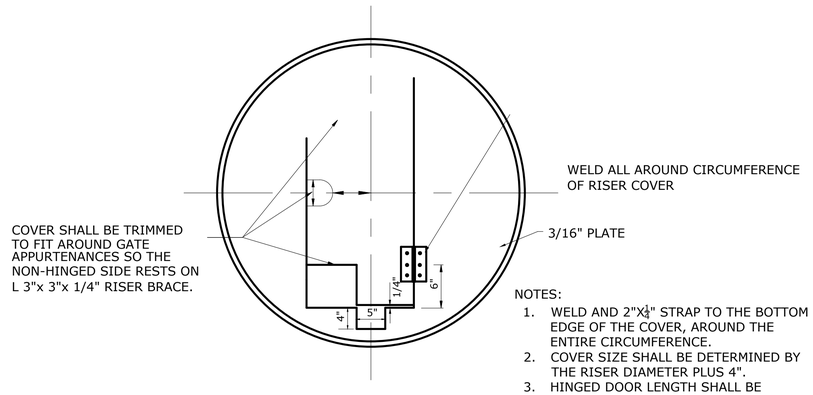

NOTES:

1. WELD AND 2"X$\frac{1}{4}$" STRAP TO THE BOTTOM EDGE OF THE COVER, AROUND THE ENTIRE CIRCUMFERENCE.
2. COVER SIZE SHALL BE DETERMINED BY THE RISER DIAMETER PLUS 4".
3. HINGED DOOR LENGTH SHALL BE DETERMINED BY THE RISER DIAMETER MINUS 5" EITHER SIDE OF RISER.

ALUMINMUM GATE RISER COVER DETAIL

NOT TO SCALE

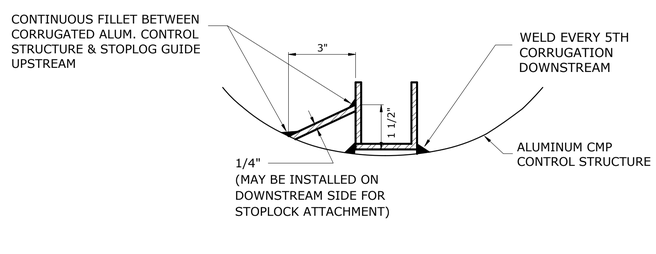

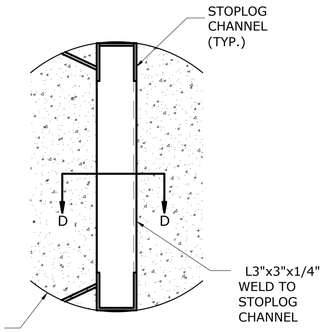

DETAIL "A"

NOT TO SCALE

ALUMINUM STOPLOG GUIDE DETAIL

NOT TO SCALE

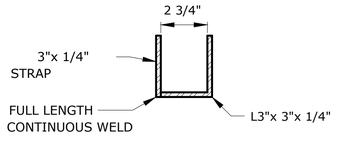

ALUMINUM STOPLOG CHANNEL DETAIL

NOT TO SCALE

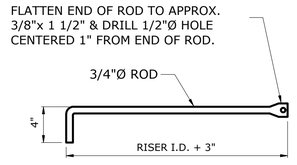

LOCKING ROD DETAIL

NOT TO SCALE

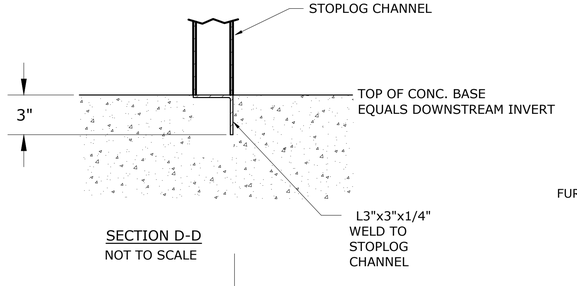

SECTION D-D

NOT TO SCALE

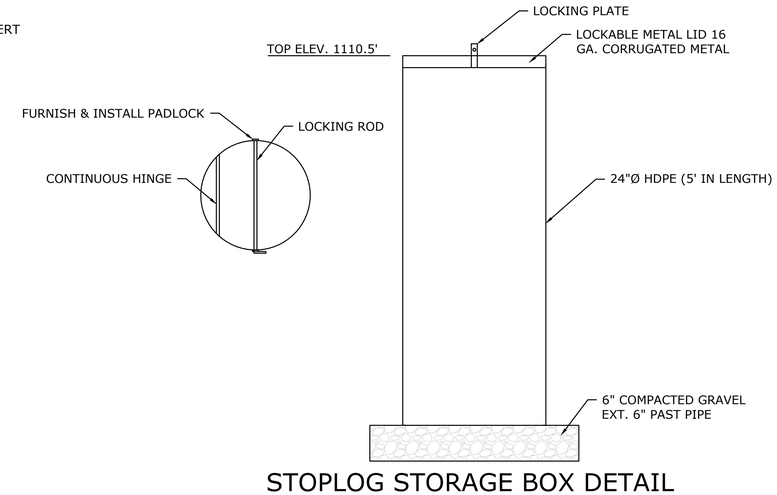

STOPLOG STORAGE BOX DETAIL

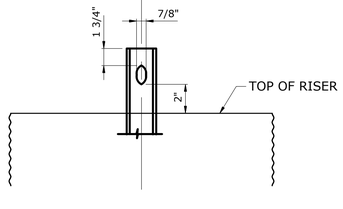

LOCKING ROD SLOT DETAIL

NOT TO SCALE

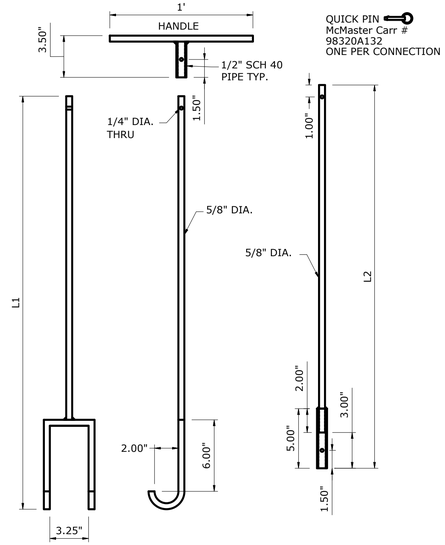

STOPLOG LIFTING HOOK DETAIL

NOT TO SCALE

NOTE: L1 AND L2 EQUAL HEIGHT OF RISER PLUS 1'
MAX LENGTH FOR EACH 5'. AFTER ADD A SECOND EXTENTION L3
2 PER STRUCTURE

NOTICE: CONSTRUCTION SITE SAFETY IS THE SOLE RESPONSIBILITY OF THE CONTRACTOR. DUCKS UNLIMITED, INC., SHALL NOT ASSUME ANY RESPONSIBILITY FOR THE SAFETY OF THE WORK PERFORMED, PERSONS ENGAGED IN THE WORK, NEARBY STRUCTURES, OR OF OTHER PERSONS ON-SITE. THE INFORMATION CONTAINED IN THIS DRAWING IS THE PROPERTY OF DUCKS UNLIMITED, INC. AND IS NOT TO BE USED OR REPRODUCED FOR ANY PURPOSE WITHOUT THE PRIOR WRITTEN CONSENT OF AN AUTHORIZED AGENT OF DUCKS UNLIMITED, INC. DUCKS UNLIMITED, INC. MAKES NO REPRESENTATION, EXPRESS OR IMPLIED, AS TO THE ACCURACY OF THE MATERIAL, DATA AND INFORMATION CONTAINED HEREIN AND ASSUMES NO RESPONSIBILITY FOR ANYONE'S USE OF THE MATERIAL, DATA AND INFORMATION OR THE RESULTS THEREOF. AT THE USERS SOLE RISK. BY USING ANY OF THIS MATERIAL, DATA AND INFORMATION, USER AGREES THAT DUCKS UNLIMITED, INC. IS NOT RESPONSIBLE FOR THEIR USE OF THE MATERIAL, DATA AND INFORMATION OR THE RESULTS THEREOF. IT IS A VIOLATION OF LAW FOR ANY PERSON, UNLESS ACTING UNDER THE DIRECTION OF A LICENSED PROFESSIONAL ENGINEER, ARCHITECT, LANDSCAPE ARCHITECT OR LAND SURVEYOR TO ALTER THIS ITEM IN ANY WAY. IF THIS ITEM BEARING THE STAMP OF A LICENSED PROFESSIONAL IS ALTERED, THE ALTERING ENGINEER, ARCHITECT, LANDSCAPE ARCHITECT OR LAND SURVEYOR SHALL STAMP THE DOCUMENT AND INCLUDE THE NOTATION 'ALTERED BY' FOLLOWED BY THEIR SIGNATURE, THE DATE OF SUCH ALTERATION, AND A SPECIFIC DESCRIPTION OF THE ALTERATION.

C:\Users\aschippers\Ducks Unlimited Incorporated\Iowa - Documents\Iowa\02_C3D Projects\IA-340-2 CREP PROJECTS\GREENE FTZ\PATRICK\C3D_DRAWING\IA-340-100 DETAILS.dwg, 10/14/2026 9:54 AM, Andrew Schippers, WCS DETAIL SHEET 2, None

GREAT LAKES/ATLANTIC REGIONAL OFFICE
7322 NEWMAN BOULEVARD, BUILDING 2, STE. 200
DEXTER, MICHIGAN 48130
(734) 623-2000
www.ducks.org
DUCKS UNLIMITED

AFFIX SEAL: DUCKS UNLIMITED, INC.

ON:

WCS DETAIL SHEET 2
PROJECT NO. GRE853129D
GREENE COUNTY
IOWA

Revision	Sheet	Revisions	Date	By
0	ALL	FINAL PLANS	2/20/2026	AS
1	ALL	IDALS REVIEW	7/16/26	AB
2	ALL	CHANNEL MODIFICATION	10-13-26	AS

CAD FILE:
IA-340-100 DETAILS

DESIGNED BY: AS & AB

DRAWN BY: GS & AS

SURVEYED BY: AS & AB

BIOLOGIST: HS

DATE:
10/13/26

PROJECT NUMBER:
US-IA-340-100

C304

NOTE:
BERM SHALL BE OVERBUILT BY 5% (1110.6'), SO THAT THE SETTLED TOP OF BERM WILL BE 1110.3'

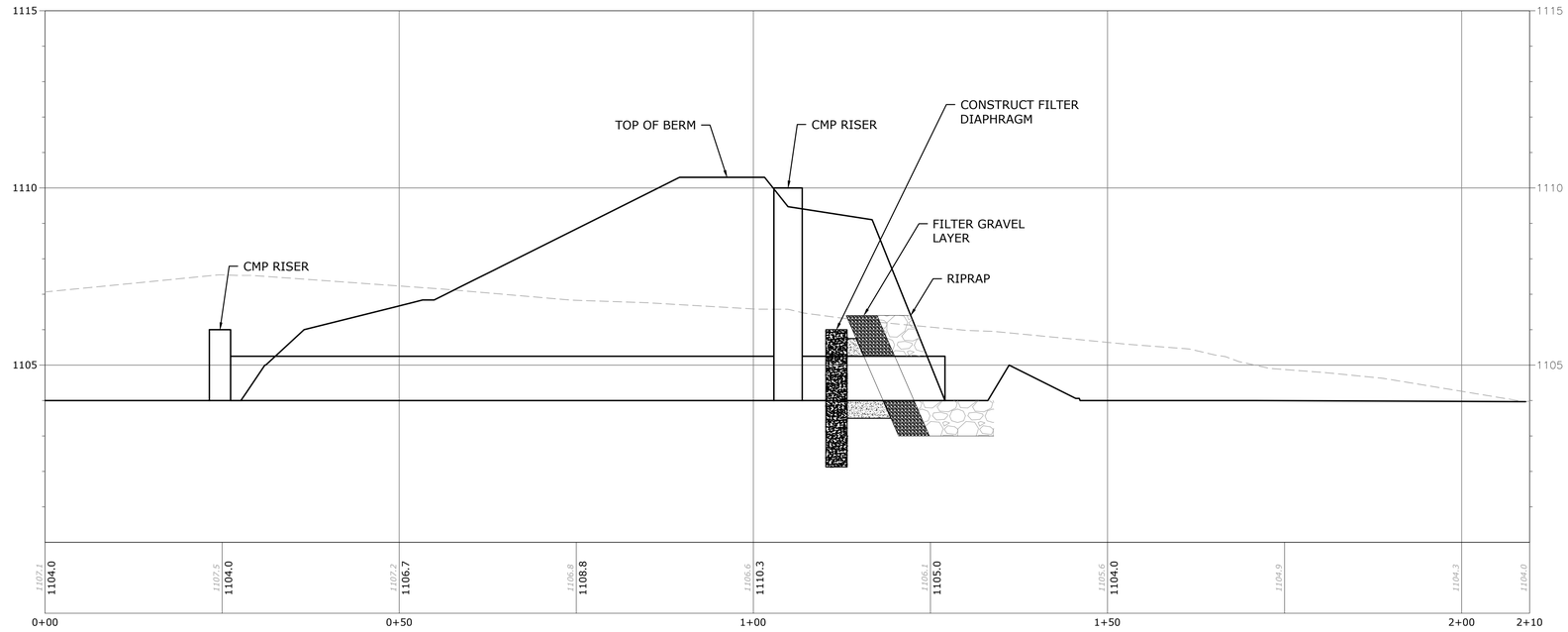

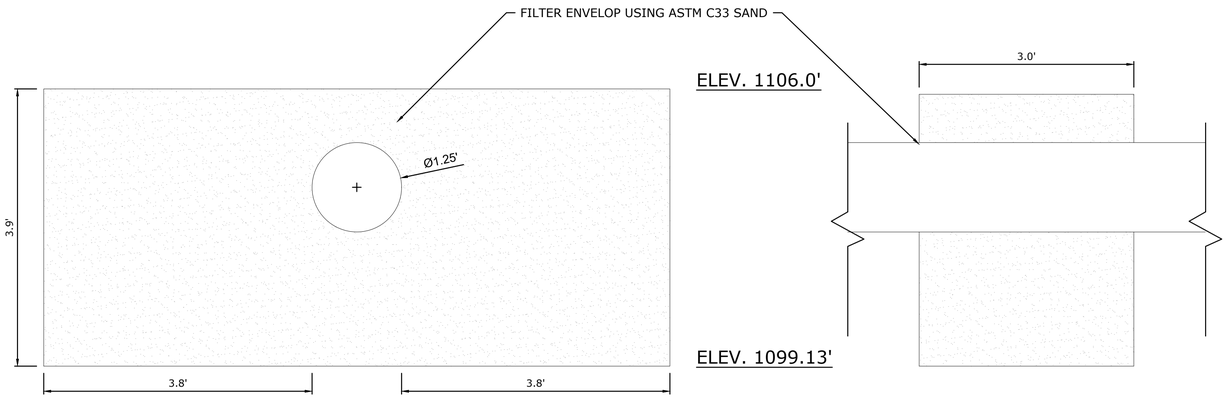

ELEVATION DETAIL - FILTER DIAPHRAGM

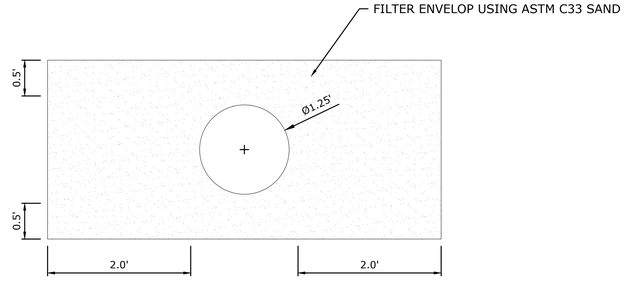

SETION DETAIL - FILTER DIAPHRAGM FILTER ENVELOPE

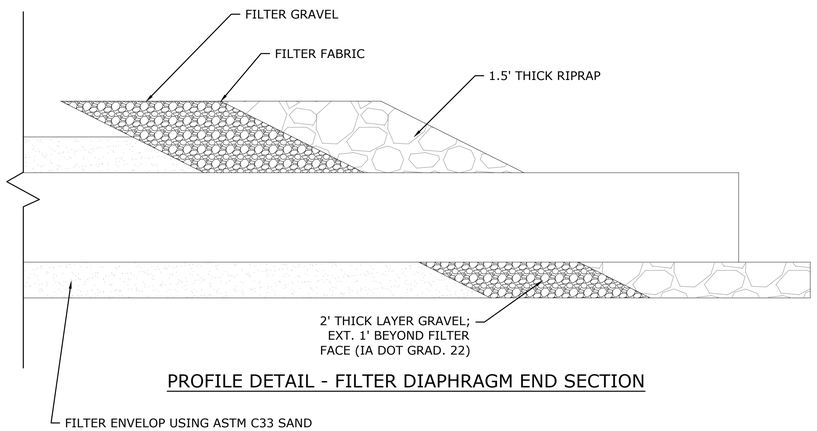

PROFILE DETAIL - FILTER DIAPHRAGM END SECTION

NOTICE: CONSTRUCTION SITE SAFETY IS THE SOLE RESPONSIBILITY OF THE CONTRACTOR. DUCKS UNLIMITED, INC., SHALL NOT ASSUME ANY RESPONSIBILITY FOR THE SAFETY OF THE WORK PERFORMED, PERSONS ENGAGED IN THE WORK, NEARBY STRUCTURES, OR OF OTHER PERSONS ON-SITE. THIS MATERIAL, DATA AND INFORMATION IS THE PROPERTY OF DUCKS UNLIMITED, INC. AND MAY NOT BE USED OR REPRODUCED FOR ANY PURPOSE WITHOUT THE PRIOR WRITTEN CONSENT OF AN AUTHORIZED AGENT OF DUCKS UNLIMITED, INC. DUCKS UNLIMITED, INC. MAKES NO REPRESENTATIONS, EXPRESS OR IMPLIED, AS TO THE ACCURACY OR COMPLETENESS OF THIS MATERIAL, DATA AND INFORMATION AND SHALL NOT BE LIABLE FOR ANY ERRORS, OMISSIONS, OR INACCURACIES IN THIS MATERIAL, DATA AND INFORMATION OR FOR ANY ACTION TAKEN IN RELIANCE THEREON. THE USERS SOLE RISK. BY USING ANY OF THIS MATERIAL, DATA AND INFORMATION, USER AGREES THAT DUCKS UNLIMITED, INC. IS NOT RESPONSIBLE FOR THEIR USE OF THE MATERIAL, DATA AND INFORMATION OR THE RESULTS THEREOF. IT IS A VIOLATION OF LAW FOR ANY PERSON, UNLESS ACTING UNDER THE DIRECTION OF A LICENSED PROFESSIONAL ENGINEER, ARCHITECT, OR LANDSCAPE ARCHITECT, TO ALTER ANY ITEM ON THIS MEDIA THAT BEARING THE STAMP OF A LICENSED PROFESSIONAL IS ALTERED, THE ALTERING ENGINEER, ARCHITECT, LANDSCAPE ARCHITECT OR LAND SURVEYOR SHALL STAMP THE DOCUMENT AND INCLUDE THE NOTATION 'ALTERED BY' FOLLOWED BY THEIR SIGNATURE, THE DATE OF SUCH ALTERATION, AND A SPECIFIC DESCRIPTION OF THE ALTERATION.

C:\Users\aschippers\Ducks Unlimited Incorporated\Iowa - Documents\Iowa\02_C3D Projects\IA-340-2 CREP PROJECTS\GREENE FITZPATRICK\C3D_DRAWINGS\IA-340-100 Site Plan.dwg, 10/14/2026 9:58 AM, Andrew Schippers, FILTER DIAPHRAGM, None

GREAT LAKES/ATLANTIC REGIONAL OFFICE
7322 NEWMAN BOULEVARD, BUILDING 2, STE. 200
DEXTER, MICHIGAN 48130
(734) 623-2000
www.ducks.org
DUCKS UNLIMITED

AFFIX SEAL: DUCKS UNLIMITED, INC.

ON:

FILTER DIAPHRAGM DETAILS
PROJECT NO. GRE8531290
GREENE COUNTY
IOWA

Revision	Sheet	Revisions	Date	By
0	ALL	FINAL PLANS	2/20/2026	AS
1	ALL	IDALS REVIEW	7/16/26	AB
2	ALL	CHANNEL MODIFICATION	10-13-26	AS

CAD FILE:
IA-340-100 Site Plan
DESIGNED BY: AS & AB
DRAWN BY: GS & AS
SURVEYED BY: AS & AB
BIOLOGIST: HS
DATE:
10/13/26
PROJECT NUMBER:
US-IA-340-100

C305

NOTICE: CONSTRUCTION SITE SAFETY IS THE SOLE RESPONSIBILITY OF THE CONTRACTOR; DUCKS UNLIMITED, INC. SHALL NOT ASSUME ANY RESPONSIBILITY FOR THE SAFETY OF THE WORK PERFORMED. PERSONS ENGAGED IN THE WORK, NEARBY STRUCTURES, OR OF OTHER PERSONS ON-SITE. NOTICE: THIS PLAN, DATA AND INFORMATION IS THE PROPERTY OF DUCKS UNLIMITED, INC. AND MAY NOT BE USED OR REPRODUCED FOR ANY PURPOSE WITHOUT THE PRIOR WRITTEN CONSENT OF DUCKS UNLIMITED, INC. DUCKS UNLIMITED, INC. MAKES NO REPRESENTATION, EXPRESSED OR IMPLIED, AS TO THE ACCURACY OF THE INFORMATION CONTAINED ON THIS PLAN AND ASSUMES NO RESPONSIBILITY FOR ANYONE'S USE OF THE INFORMATION. THE USER'S SOLE RISK. BY USING ANY OF THIS MATERIAL, DATA AND INFORMATION, USER AGREES THAT DUCKS UNLIMITED, INC. IS NOT RESPONSIBLE FOR THEIR USE OF THE MATERIAL, DATA AND INFORMATION OR THE RESULTS THEREOF. IT IS A VIOLATION OF LAW FOR ANY PERSON, UNLESS THEY ARE ACTING UNDER THE DIRECTION OF A LICENSED PROFESSIONAL ENGINEER, ARCHITECT OR LAND SURVEYOR, TO ALTER THIS ITEM. IF THIS ITEM BEARING THE STAMP OF A LICENSED PROFESSIONAL IS ALTERED, THE ALTERING ENGINEER, ARCHITECT, LANDSCAPE ARCHITECT OR LAND SURVEYOR SHALL STAMP THE DOCUMENT AND INCLUDE THE NOTATION "ALTERED BY" FOLLOWED BY THEIR SIGNATURE, THE DATE OF SUCH ALTERATION, AND A SPECIFIC DESCRIPTION OF THE ALTERATION.

C:\Users\aschippers\Ducks Unlimited Incorporated\Iowa - Documents\Iowa\02_C3D Projects\IA-340-2 CREP PROJECTS\GREENE FITZPATRICK\C3D_DRAWING\IA-340-100 Site Plan.dwg, 10/14/2026 9:58 AM, Andrew Schippers, SEEDING PLAN, None

NOTE:
REFERENCE SPECIFICATION IA-6 (SEEDING AND MULCHING FOR PROTECTIVE COVER) FOR SEEDING MIXTURE TYPES AND APPLICATIONS STANDARDS. EXISTING GRASS WITHIN THE EASEMENT BOUNDARY THAT IS NOT PART OF THE WORK SHALL NOT BE DISTURBED.

LEGEND

STRUCTURE SEEDING

BUFFER SEEDING

GRAPHIC SCALE

80 0 40 80 160 320

1 inch = 80 feet

GREAT LAKES/ATLANTIC REGIONAL OFFICE
7322 NEWMAN BOULEVARD, BUILDING 2, STE. 200
DEXTER, MICHIGAN 48130
(734) 623-2000
www.ducks.org
DUCKS UNLIMITED

AFFIX SEAL: DUCKS UNLIMITED, INC.

ON:

SEEDING PLAN
PROJECT NO. GRE853129D
GREENE COUNTY
IOWA

Revision	Sheet	Revisions	Date	By
0	ALL	FINAL PLANS	2/30/2026	AS
1	ALL	IDALS REVIEW	7/16/26	AB
2	ALL	CHANNEL MODIFICATION	10-13-26	AS

CAD FILE:
IA-340-100 Site Plan

DESIGNED BY: AS & AB

DRAWN BY: GS & AS

SURVEYED BY: AS & AB

BIOLOGIST: HS

DATE:
10/13/26

PROJECT NUMBER:
US-IA-340-100

C401