Farnsworth GROUP

Addendum

Addendum Number: 1.0

Addendum Issue Date: February 22, 2024

Owner: State of Iowa Department of Corrections – Clarinda Correctional Facility

Project Name: Clarinda Correctional Facility – Kitchen & Laundry

RFB Number: 922300-02

Containing: 11 Pages; 6 Drawings; 2 Specifications

This addendum amends the drawings and specifications of the above reference project and is hereby incorporated into the contract documents as part thereof. Bidders must acknowledge receipt of this Addendum in the space provided on the Bid Form. ***FAILURE TO DO SO MAY SUBJECT BIDDER TO DISQUALIFICATION****.*

General:

- In reference to sheet E5.1 - ELECTRICAL DIAGRAMS
  1. **CLARIFICATION:** provide new 1200A/3P switch in existing MSB-2.
  2. **CLARIFICATION:** provide new 250A/3P switch in existing MSB-1.

Drawings:

General & Architectural:

Item No. 1. Sheets: G0.1 – GENERAL INFORMATION, A1.1 LEVEL 1 FLOOR PLAN – AREA 'A', & A1.2 LEVEL 1 FLOOR PLAN – AREA 'B'

Reference – BID ALTERNATES

1. **REVISE** Alternate NO. 2 to read as follows:

BASE BID CONDITION: PROVIDE KITCHEN EQUIPMENT AS NOTED IN FSE DOCUMENTS WITH THE EXCEPTION OF NOTED ALTERNATE EQUIPMENT. PROVIDE ALL ROUGH-INS TO NOTED ALTERNATE EQUIPMENT BUT DO NOT PROVIDE INSTALLATION OR HOOKUP SERVICES.

ALTERNATE BID CONDITION: PROVIDE ALL NOTED ALTERNATE BAKERY EQUIPMENT AND FULL INSTALLATION OF ALL EQUIPMENT.

2. **ADD** Alternate NO 3. to read as follows:

ALTERNATE NO. 3:

BASE BID CONDITION: PROVIDE KITCHEN EQUIPMENT AS NOTED IN FSE DOCUMENTS WITH THE EXCEPTION OF NOTED ALTERNATE EQUIPMENT. PROVIDE ALL ROUGH-INS TO NOTED ALTERNATE EQUIPMENT BUT DO NOT PROVIDE INSTALLATION OR HOOKUP SERVICES.

ALTERNATE BID CONDITION: PROVIDE ALL NOTED ALTERNATE NO. 3 EQUIPMENT AND FULL INSTALLATION OF ALL EQUIPMENT.

Life Safety:

Item No. 2. LS1.1 – FIRST FLOOR LIFE SAFETY

Reference view 1 – LIFE SAFETY PLAN – LEVEL 1

1. **ADD** fire extinguisher cabinet as shown in updated attached sheet

Civil: NA
Structural: NA

Foodservice Equipment:

Item No. 3. FS101 – FOODSERVICE EQUIPMENT PLAN AND SCHEDULE - AREA 1
Reference Foodservice Equipment Schedule – Area A
1. **REVISE** schedule as shown in updated attached sheet

Item No. 4. FS102 – FOODSERVICE EQUIPMENT PLAN AND SCHEDULE - AREA 2
Reference Foodservice Equipment Schedule – Area B
1. **REVISE** schedule as shown in updated attached sheet

Item No. 5. FS103 – FOODSERVICE EQUIPMENT PLAN AND SCHEDULE - AREA 3
Reference Foodservice Equipment Schedule – Area C
1. **REVISE** schedule as shown in updated attached sheet

Item No. 6. FSE100 – FOODSERVICE EQUIPMENT ELECTRICAL SCHEDULE & DETAILS
Reference Foodservice Equipment Electrical Schedule
1. **REVISE** schedule as shown in updated attached sheet

Item No. 7. FSM100 – FOODSERVICE EQUIPMENT MECHANICAL SCHEDULE
Reference Foodservice Equipment Mechanical Schedule
1. **REVISE** schedule as shown in updated attached sheet

Fire Protection: NA

Plumbing:

Item No. 8. P1.1 - LEVEL 01 PLAN - AREA A – PLUMBING
Reference - KEYNOTESs
1. **REVISE** “Alternate” to “Alternate No. 1” in Keynote 2.
2. **REVISE** “Alternate” to “Alternate No. 1” in Keynote 4.
3. **REVISE** “Alternate” to “Alternate No. 1” in Keynote 5.

Item No. 9. P4.2 - PLUMBING DETAILS
Reference view 3 - WASHING MACHINE PIPING DEATIL
1. **REVISE** “Alternate” to “Alternate No. 1”.

Mechanical:

Item No. 10. M1.1 - LEVEL 01 PLAN - AREA A - MECHANICAL
Reference view 2 - SECTION - LEVEL 01 PLAN
1. **REVISE** “Alternate” to “Alternate No. 1”. on note pointing to 18” EA duct.

Electrical: NA
Technology: NA

Specifications:

Item No. 11. Section 00 4116 – BID FORM
REPLACE entire section with attached, updated form which includes Alternate NO. 3 for bid packages 04, 06, & 07.

Item No. 12. Section 01 1200 – CONTRACT SUMMARY
REPLACE entire section with attached, updated section which includes Alternate NO. 3 for bid packages 04, 06, & 07.

Item No. 13. Section 07 5300 – ELASTOMERIC MEMBRANE ROOFING
Reference 2.01 Manufacturers

1. **ADD** item B.7. *Elevate: www.holcimelevate.com/#sle*

Reference 2.03 Roofing Membrane and Associated Materials

2. **REVISE** item A to read as follows: *Membrane: Ethylene-propylene-diene-terpolymer (EPDM); non-reinforced; complying with minimum properties of ASTM D4637/D4637M.*
3. **REVISE** Item A3. to read as follows: *Color: Black*
4. **REVISE** Item C. to read as follows: *Vapor Barrier: modified bitumen adhesive, factory-laminated to a woven, high-density polyethylene membrane complying with requirements of fire rating classification; compatible with roofing and insulation materials.*
5. **ADD** Item C. 4. as follows*: Sealability per ASTM D1970*
6. **ADD** item C. 5. as follows: *Primer: as required by manufacturer*
7. **REVISE** item D.4 to read as follows: *Color: Black*

Reference 2.04 Coverboards

8. **REVISE** item A.2. to read as follows: *FM classified for Severe Hail (SH) in approved…..*
9. **REVISE** item A.3.a to read as follows: *Georgia-Pacific; DensDeck Prime Roof Boards with EONIC Technology:….*

Section 11 4000 - FOODSERVICE EQUIPMENT
Reference Section 3.06 ITEM SPECIFICATIONS
REVISE as follows:

Item No. 14. 1 RECEIVING CART **(BY OWNER)**
Three
Rubbermaid Model FG444100BLA or equal by Continental Commercial Products or Carlisle *R103
Substitutions": As approved by Architect prior to bid".
Features: Heavy-duty; 2000 pound capacity; 24" x 48" platform; crossbar handle; four 8" diameter polyolefin casters; prison package tamper proof screws

Item No. 15. 5 DRY STORAGE SHELVING **(BY OWNER)**
Twenty
New Age H. D. Shelving or equal by IMC Teddy Series SSS-L or Lakeside Prisonbilt Series PBWS *R103
"Substitutions": As approved by Architect prior to bid".
Features: Length and width shown on Plan; fully welded aluminum construction; four shelves per unit; 1500 lbs shelf capacity; 72" high posts; 6" platform casters, all with brakes (M6); correctional package tamper proof screws

Item No. 16. 24 MOBILE TRASH BIN **(BY OWNER)**
One
Rubbermaid Model FG263200GRAY w/FG263100GRAY Lid & FG264000BLA Dolly or equal by Continental Commercial Products or Carlisle *R103
Substitutions": As approved by Architect prior to bid".
Features: 32 gallon capacity; venting channels; dolly; gray color; lid; correctional package tamper proof hardware

Item No. 17. 28 UTILITY CART **(BY OWNER)**
Eleven
Lakeside Model 544 or equal by WinHolt *R103
"Substitutions": As approved by Architect prior to bid".
Features: Stainless steel construction with three shelves; shelf size 21" x 33"; 700 pound capacity; bumpers; delete fixed casters; provide four 5" diameter swivel casters; NSF listed; correctional package tamper proof hardware

Item No. 18. 29 INGREDIENT DELIVERY CART **(BY OWNER)**
Four
Rubbermaid Model FG444100BLA or equal by Continental Commercial Products *R103
"Substitutions": As approved by Architect prior to bid".
Features: Heavy-duty cart; 2500 pound capacity; 24" x 48" platform; (2) fixed and (2) swivel 8" polyolefin casters; crossbar handle; correctional package tamper proof hardware

Item No. 19. 30 OVEN RACK, DOUBLE **(ADD ALTERNATE – ALT 3)**
Four
LBC Model LRR-2D-26-15 or equal by Baxter or Gemini *R103
"Substitutions": As approved by Architect prior to bid".
A. Features: Heavy-duty 18 gauge stainless steel rack construction; double side-load rack for double oven; capacity for (30) 18" x 26" pans on 4" spacing; four 4" diameter swivel casters; sized to fit into Proofer, Item #74 and Rack Ovens specified in this project; fully welded; requires factory assembly
B. Correctional Package: Welded fasteners; tamper proof hardware

Item No. 20. 34 FOOD CUTTER **(ADD ALTERNATE – ALT 3)**
One
Hobart Model 84186C-1 *R103
"Substitutions": As approved by Architect prior to bid".
A. Features: 1 HP food cutter; 18" diameter stainless steel bowl; rubber feet; double stainless steel knives; safety interlock; #12 attachment hub; vegetable slicer with adjustable slicing plate; grater plate; plate holder; deluxe bowl cover; 3" legs; correctional package
B. Electrical: 120V, 1 phase; cord and plug

Item No. 21. 37 BAKERY DRY STORAGE SHELVING **(ADD ALTERNATE- ALT 2)**

Item No. 22. 39 MOBILE MIXING BOWL, 80 QT **(ADD ALTERNATE – ALT 2)**

Item No. 23. 40 MOBILE HOT/COLD TRANSPORT CART **(BY OWNER)**

Item No. 24. 60 MOBILE RACK **(BY OWNER)**
Sixteen
Lakeside Model PBPR988 *R103
"Substitutions": As approved by Architect prior to bid".
Features: Pan Rack, open, heavy duty; 29-1/2"W x 21-1/2"D x 66"H; (20) pair tray slides; aluminum construction; 1000 lb. capacity; heavy duty 6" casters with tamper-resistant screws (correctional specification)

Item No. 25. 63 140 QUART MIXER **(ADD ALTERNATE – ALT 2)**

Item No. 26. 64 WATER METER W/TEMPERATURE RANGE **(ADD ALTERNATE – ALT 2)**

Item No. 27. 65 MOBILE TRASH BIN **(BY OWNER)**
One
Rubbermaid Model FG263200GRAY w/FG263100GRAY Lid & FG264000BLA Dolly or equal by Continental Commercial Products or Carlisle *R103
Substitutions": As approved by Architect prior to bid".
Features: 32 gallon capacity; venting channels; dolly; gray color; lid; correctional package tamper proof hardware

Item No. 28. 66 MOBILE INGREDIENT BIN **(ADD ALTERNATE – ALT 2)**

Item No. 29. 67 SPIRAL MIXER **(ADD ALTERNATE – ALT 2)**

Item No. 30. 69 SHEETER **(ADD ALTERNATE – ALT 2)**

Item No. 31. 71 DIGITAL BENCH SCALE **(ADD ALTERNATE – ALT 2)**

Item No. 32. 73 OVEN RACK, DOUBLE **(ADD ALTERNATE – ALT 2)**

Item No. 33. 74 ROLL-IN PROOFER, 2 DOUBLE RACKS **(ADD ALTERNATE – ALT 2)**

Item No. 34. 77 BAKERY WORKCOUNTER W/RICHLITE TOP **(ADD ALTERNATE – ALT 2)**

Item No. 35. 78 DIVIDER ROUNDER **(ADD ALTERNATE – ALT 2)**

Item No. 36. 79 BREAD SLICER **(ADD ALTERNATE – ALT 2)**

Item No. 37. 81 SHEET PAN DOLLY **(ADD ALTERNATE -ALT 2)**

Item No. 38. 82 MOBILE EQUIPMENT STAND **(ADD ALTERNATE – ALT 2)**

Item No. 39. 83 BUN SLICER **(ADD ALTERNATE – ALT 2)**

Item No. 40. 84 OVEN RACK, DOUBLE **(ADD ALTERNATE – ALT 3)**
Six
LBC Model LRR-2D-26-15 or equal by Baxter or Gemini *R103
"Substitutions": As approved by Architect prior to bid".

A. Features: Heavy-duty 18 gauge stainless steel rack construction; double side-load rack for double oven; capacity for (30) 18" x 26" pans on 4" spacing; four 4" diameter swivel casters; sized to fit into Proofer, Item #74 and Rack Ovens specified in this project; fully welded; requires factory assembly
B. Correctional Package: Welded fasteners; tamper proof hardware

Item No. 41. 87 RACK OVEN, 2-SEC. **(ADD ALTERNATE – ALT 3)**
Two
LBC Model LRO-2G6-N-70 or equal by Baxter or Gemini *R103
"Substitutions": As approved by Architect prior to bid".

A. Features: Double rack oven; capacity for two single racks or one double oven rack; natural gas operation; stainless steel exterior and interior; 12 gauge (0.105" thick) steel floor, anchored to the subfloor with (8) anchor bolts; counterflow heat exchanger; self-contained, waterfall type steam generation system; 0" combustible wall clearance at sides and back; insulated door with full-length window; heavy-duty rack lift with gear-driven rotation system; self-adjusting rotor clutch; programmable digital control; manual backup control; integral Type I exhaust hood with grease filters; automatic operation; Fire Protection System, Items #89 and #90; ventilator fan provided by Electrical Contractor; interior lighting; oven-powered connection point for automatic fan operation with interconnection from fan to oven provided by Mechanical Contractor; FSEC to provide stainless steel trim flange at opening in ceiling around oven and stainless steel enclosure panels from top of oven to ceiling; FSEC to provide stainless steel coved interior and exterior base; quick disconnect water connection per Article 2.11B; water provided by building RO system, verify that it meets equipment requirements; coordinate building entrance requirements and provide split oven if requirements cannot be met; factory authorized set-up required
B. Correctional Package (160-666): Maximum security; tamper proof hardware; lockable cover on control panel, pad locks are keyed alike; lockable loading door; emergency stop/alarm switch located inside baking chamber; metal cover over loading door window and baking chamber light
C. Installation: Provide complete installation and start-up by factory authorized installers
D. Electrical: 120/208V, 3 phase

Item No. 42. 101B PAN STORAGE SHELVING **(BY OWNER)**
Six
New Age H. D. Shelving or equal by IMC Teddy Series SSS-L or Lakeside Prisonbilt Series PBWS *R103
"Substitutions": As approved by Architect prior to bid".
Features: Length and width shown on Plan; fully welded aluminum construction; four shelves per unit; 1500 lbs shelf capacity; 72" high posts; 6" platform casters, all with brakes (M6); correctional package tamper proof screws

Item No. 43. 103 UTILITY CART **(BY OWNER)**
One
Lakeside Model 544 or equal by WinHolt *R103
"Substitutions": As approved by Architect prior to bid".
Features: Stainless steel construction with three shelves; shelf size 21" x 33"; 700 pound capacity; bumpers; delete fixed casters; provide four 5" diameter swivel casters; NSF listed; correctional package tamper proof hardware

Item No. 44. 105 MOBILE TRASH BIN **(BY OWNER)**
Eight
Rubbermaid Model FG263200GRAY w/FG263100GRAY Lid & FG264000BLA Dolly or equal by Continental Commercial Products or Carlisle *R103
Substitutions": As approved by Architect prior to bid".
Features: 32 gallon capacity; venting channels; dolly; gray color; lid; correctional package tamper proof hardware

Item No. 45. 109 FOOD PROCESSOR **(ADD ALTERNATE – ALT 3)**
One
Robot Coupe Model R301U *R103
"Substitutions": As approved by Architect prior to bid".

A. Features: Combination Food Processor; 3.7 liter stainless steel bowl with handle; continuous feed kit with kidney shaped & cylindrical shaped hoppers; includes: (1) "S" blade (27286), (1) 2mm grating disc (27577), (1) 4mm slicing disc (27566); on/off & pulse switch; single speed, 1.5 HP; SP5Disc, (5) disc package; Dice Cleaning Kit

B. Electrical: 120V, 1 phase; cord and plug

Item No. 46. 112 REACH-IN REFRIGERATOR, 2-SEC. **(ADD ALTERNATE – ALT 3)**
One
Victory Ultra Spec Model RS-2D-S1-EW-HC or equal by Traulsen Spec Line *R103
"Substitutions": As approved by Architect prior to bid".
A. Features: Reach-in, two-section; self-contained refrigeration; (2) wide full height solid hinged doors; stainless steel exterior and interior, standard depth cabinet, TOUCH POINT™ electronic temperature control/indicator; expansion valve technology; stainless steel breakers; R290 Hydrocarbon refrigerant, stainless steel case back - with stainless steel rear air grille; lexan cover; no lights option; top shroud bracket; 7" clearance welded type A/C tray slides; correctional door handles; padlock hasp assembly; slotted top/back cover; tamper-proof screws; 6" diameter heavy duty casters front with brakes
B. Electrical: 120V, 1 phase; cord and plug

Item No. 47. 114 SLICER **(ADD ALTERNATE – ALT 3)**
One
Hobart Model HS9N-1 or equal by Globe *R103
"Substitutions": As approved by Architect prior to bid".
A. Features: Heavy duty meat slicer; automatic; 13" CleanCut™ knife; anodized finish; (3) stroke lengths and (4) stroke speeds; removable meat grip assembly; removable ring guard cover; product fence; single action top mounted sharpener with Borazon™ stones; manual lift lever; 1/2 hp motor; correctional package tamper proof hardware
B. Electrical: 120V, 1 phase; cord and plug

Item No. 48. 116 HORIZONTAL CUTTER/MIXER **(ADD ALTERNATE – ALT 2)**

Item No. 49. 131 CHEMICAL STORAGE SHELVING **(BY OWNER)**
Two
New Age H. D. Shelving or equal by IMC Teddy Series SSS-L or Lakeside Prisonbilt Series PBWS *R103
"Substitutions": As approved by Architect prior to bid".
Features: Length and width shown on Plan; fully welded aluminum construction; four shelves per unit; 1500 lbs shelf capacity; 72" high posts; 6" platform casters, all with brakes (M6); correctional package tamper proof screws

Item No. 50. 141 WORKCOUNTER **(ADD ALTERNATE – ALT 3)**
Two
Fabricate; construct per Plan, Part 2-Products, Elevation and Standard Details; correctional package tamper proof hardware
"Substitutions": As approved by Architect prior to bid".

Item No. 51. 143 MOBILE RACK **(BY OWNER)**
Sixteen
Lakeside Model PBPR988 *R103
"Substitutions": As approved by Architect prior to bid".
Features: Pan Rack, open, heavy duty; 29-1/2"W x 21-1/2"D x 66"H; (20) pair tray slides; aluminum construction; 1000 lb. capacity; heavy duty 6" casters with tamper-resistant screws (correctional specification)

Item No. 52. 144 80 QUART MIXER **(ADD ALTERNATE – ALT 3)**
One
Hobart Model HL800C-1STD *R103
"Substitutions": As approved by Architect prior to bid".
A. Features: Correctional 80 quart planetary mixer; gray powder coat finish; stainless steel 80 quart bowl; "B" beater; 80 qt. "I" wire whip; "ED" dough hook; stainless steel bowl guard; power bowl lift; bowl truck; 20 minute timer,

automatic time recall; thermal overload protection; 3 HP motor; (4) fixed speeds plus stir speed, gear-driven transmission; floor model

B. Electrical: 208V, 3 phase

Item No. 53. 158 STEAMER, 2-SEC. **(ADD ALTERNATE – ALT 3)**
Two
Cleveland Model 24-CGA-10 or equal by Groen or Vulcan *R103
"Substitutions": As approved by Architect prior to bid".

A. Features: Two-compartment steamer; stainless steel cabinet frame, doors, and cavity; door hinging per Plan; 10 pan capacity; natural gas-fired steam generator; 4' security gas quick disconnect hose with restraining chain per Article 2.11B; 125 MBTU; main power on/off switch; manual controls; electronic spark ignition; thermal temperature resettable switch; automatic fill on startup; automatic generator blowdown; drain cleaning cycle; automatic probe for water level control, with high velocity rinse cycle; condensate drip trough; compartment door steam shut-off switch; two 60 minute mechanical timers; steam stand-by mode; manual bypass operation mode; cold water condenser design; one standard treated and tap water connection; 6" high stainless steel legs with adjustable flanged feet; drain cooling kit; water provided by building RO system, verify that it meets equipment requirements
B. Correctional Package CP-SCG includes: (CP-SC10), tamper proof exterior with tamper proof spanner drilled head screws; (CP-SCRD), set of screw drivers for tamper proof screws; (CP-PR), non-removable tamper proof pan racks for interior cooking compartment; (CP-PORT), tamper proof hasp-type hinged cover for descaling port, lock by Owner; (CP-COVER1), tamper proof hasp-type hinged cover for controls and power switch, lock by Owner
C. Electrical: 120V, 1 phase

Item No. 54. 160 STEAMER, 2-SEC. **(ADD ALTERNATE – ALT 3)**
One
Cleveland Model 24-CGA-10 or equal by Groen or Vulcan *R103
"Substitutions": As approved by Architect prior to bid".

A. Features: Two-compartment steamer; stainless steel cabinet frame, doors, and cavity; door hinging per Plan; 10 pan capacity; natural gas-fired steam generator; 4' security gas quick disconnect hose with restraining chain per Article 2.11B; 125 MBTU; main power on/off switch; manual controls; electronic spark ignition; thermal temperature resettable switch; automatic fill on startup; automatic generator blowdown; drain cleaning cycle; automatic probe for water level control, with high velocity rinse cycle; condensate drip trough; compartment door steam shut-off switch; two 60 minute mechanical timers; steam stand-by mode; manual bypass operation mode; cold water condenser design; one standard treated and tap water connection; 6" high stainless steel legs with adjustable flanged feet; drain cooling kit; water provided by building RO system, verify that it meets equipment requirements
B. Correctional Package CP-SCG includes: (CP-SC10), tamper proof exterior with tamper proof spanner drilled head screws; (CP-SCRD), set of screw drivers for tamper proof screws; (CP-PR), non-removable tamper proof pan racks for interior cooking compartment; (CP-PORT), tamper proof hasp-type hinged cover for descaling port, lock by Owner; (CP-COVER1), tamper proof hasp-type hinged cover for controls and power switch, lock by Owner
C. Electrical: 120V, 1 phase

Item No. 55. 193 DRYING RACK **(BY OWNER)**

Item No. 56. Section 21 0500 - BASIC FIRE SUPPRESSION SYSTEM REQUIREMENTS
Reference - Article 1.04 ALTERNATES

1. **REVISE** paragraph A to read:
   "ALTERNATE NO. 1:
   BASE BID CONDITION: Provide rough-in mechanical, electrical, and pluming resources for future laundry equipment. See MEP drawings for specific extents.
   ALTERNATE BID CONDITION: Provide laundry equipment and all related mechanical, electrical, and plumbing needs for an operable system. Provide complete installation of washers and dryers and equipment opening surrounds. See MEP drawings for specifics."
2. **REVISE** paragraph B to read:
   "ALTERNATE NO. 2:
   BASE BID CONDITION: Provide kitchen equipment as noted in FSE documents with the exception of noted alternate equipment. Provide all rough-ins to noted alternate equipment but do not provide installation or hookup services.
   ALTERNATE BID CONDITION: Provide all noted alternate bakery equipment and full installation of all equipment."
3. **ADD** new paragraph C to read:
   "ALTERNATE NO. 3:
   BASE BID CONDITION: Provide kitchen equipment as noted in FSE documents with the exception of noted alternate equipment. Provide all rough-ins to noted alternate equipment but do not provide installation or hookup services.
   ALTERNATE BID CONDITION: Provide all noted Alternate No. 3 kitchen equipment and full installation of all equipment."

Item No. 57. Section 22 0500 - BASIC PLUMBING REQUIREMENTS
Reference - Article 1.04 ALTERNATES

1. **REVISE** paragraph A to read:
   "ALTERNATE NO. 1:
   BASE BID CONDITION: Provide rough-in mechanical, electrical, and pluming resources for future laundry equipment. See MEP drawings for specific extents.
   ALTERNATE BID CONDITION: Provide laundry equipment and all related mechanical, electrical, and plumbing needs for an operable system. Provide complete installation of washers and dryers and equipment opening surrounds. See MEP drawings for specifics."
2. **REVISE** paragraph B to read:
   "ALTERNATE NO. 2:
   BASE BID CONDITION: Provide kitchen equipment as noted in FSE documents with the exception of noted alternate equipment. Provide all rough-ins to noted alternate equipment but do not provide installation or hookup services.
   ALTERNATE BID CONDITION: Provide all noted alternate bakery equipment and full installation of all equipment."

3. **ADD** new paragraph C to read:
   "ALTERNATE NO. 3:
   BASE BID CONDITION: Provide kitchen equipment as noted in FSE documents with the exception of noted alternate equipment. Provide all rough-ins to noted alternate equipment but do not provide installation or hookup services.
   ALTERNATE BID CONDITION: Provide all noted Alternate No. 3 kitchen equipment and full installation of all equipment."

Item No. 58. Section 23 0500 - BASIC HVAC REQUIREMENTS
Reference - Article 1.04 ALTERNATES

1. **REVISE** paragraph A to read:
   "ALTERNATE NO. 1:
   BASE BID CONDITION: Provide rough-in mechanical, electrical, and pluming resources for future laundry equipment. See MEP drawings for specific extents.
   ALTERNATE BID CONDITION: Provide laundry equipment and all related mechanical, electrical, and plumbing needs for an operable system. Provide complete installation of washers and dryers and equipment opening surrounds. See MEP drawings for specifics."
2. **REVISE** paragraph B to read:
   "ALTERNATE NO. 2:
   BASE BID CONDITION: Provide kitchen equipment as noted in FSE documents with the exception of noted alternate equipment. Provide all rough-ins to noted alternate equipment but do not provide installation or hookup services.
   ALTERNATE BID CONDITION: Provide all noted alternate bakery equipment and full installation of all equipment."
3. **ADD** paragraph C to read:
   "ALTERNATE NO. 3:
   BASE BID CONDITION: Provide kitchen equipment as noted in FSE documents with the exception of noted alternate equipment. Provide all rough-ins to noted alternate equipment but do not provide installation or hookup services.
   ALTERNATE BID CONDITION: Provide all noted Alternate No. 3 kitchen equipment and full installation of all equipment."

Product Approvals:

The following manufacturers are approved as substitute products of the named Base Bid manufacturer(s). Approval is contingent upon manufacturers fulfilling all specification requirements, tangible and intangible, equally as well as specified product.

References/Item	**Manufacturer/Supplier**
23 3600/Fan Powered Variable Air Volume Terminal Box	Tuttle & Bailey
23 8200/Electric Unit Heaters/5100 Series	TPI Corp

Bids are Due: March 7, 2024 / 2:00 PM local time to IMPACS Electronic Procurement System.

END OF ADDENDUM

Issued By:
FARNSWORTH GROUP, INC.
Kelsey Vetter, AIA
Project Architect

Attachments:
Drawings: LS1.1, FS101, FS102, FS103, FSE100, FSM100
Specifications: 00 4116, 01 1200
Other: Approved Substitution Request Forms - 23 3600, 23 8200

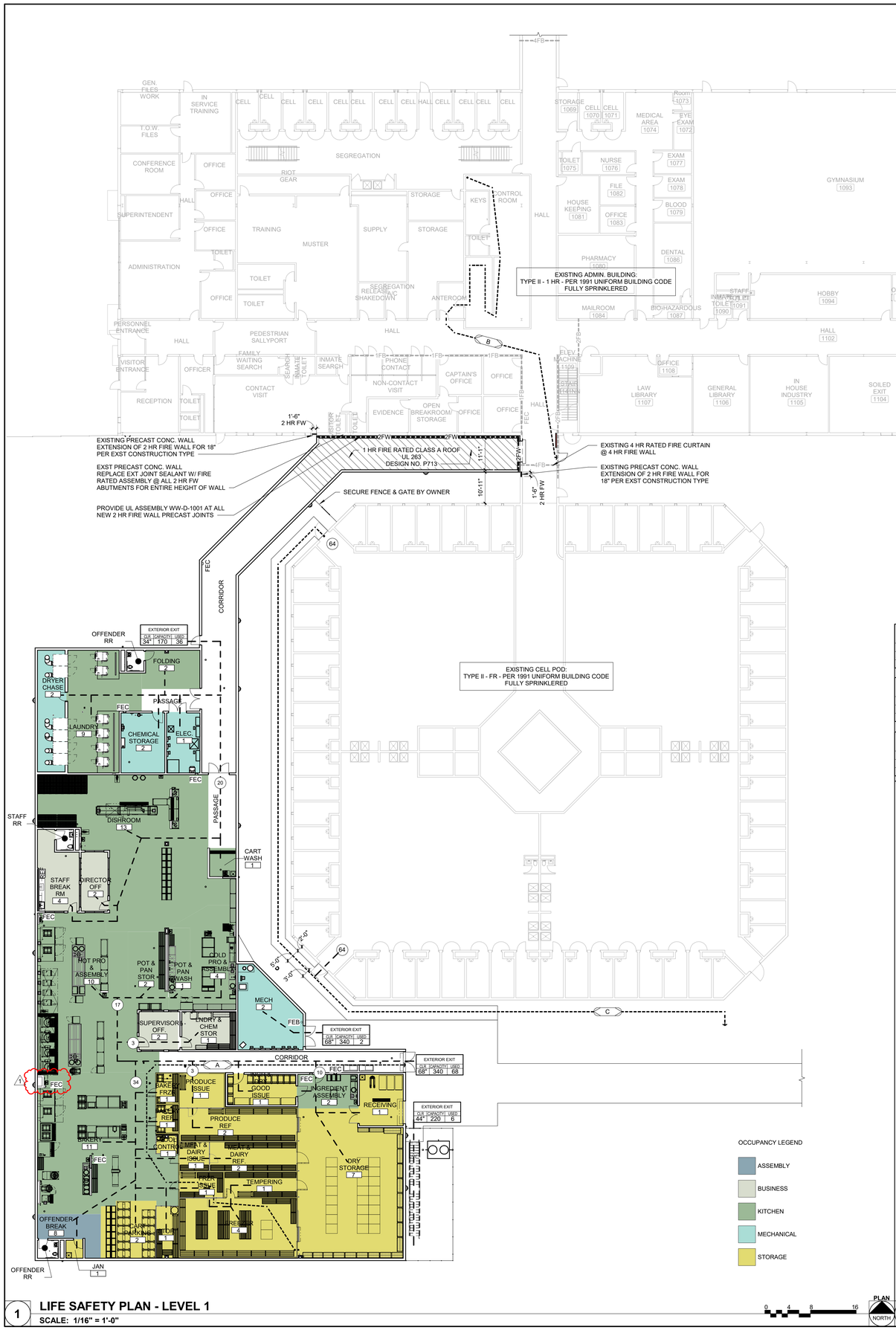

1 **LIFE SAFETY PLAN - LEVEL 1**
SCALE: 1/16" = 1'-0"

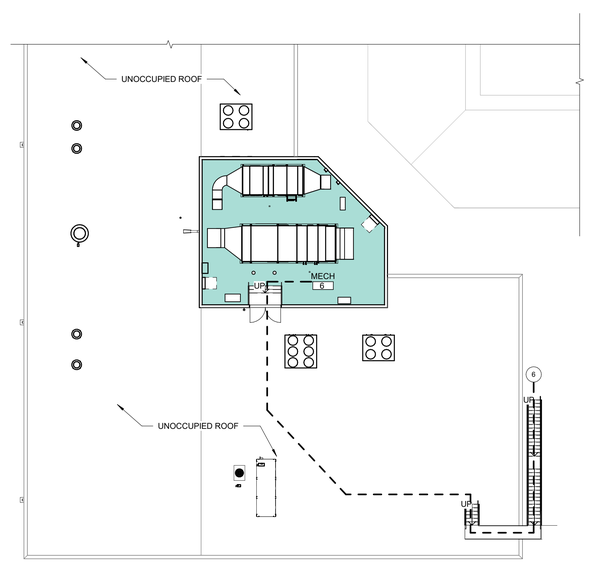

2 **LIFE SAFETY PLAN - LEVEL 2**
SCALE: 1/16" = 1'-0"

LIFE SAFETY GENERAL NOTES

A. SEE CIVIL DRAWINGS FOR INFORMATION INCLUDING CONCRETE SIDEWALKS, CONCRETE PADS, AND SECURITY FENCING. CIVIL BACKGROUND DRAWING INFORMATION IS FOR REFERENCE ONLY.

B. REFER TO ELECTRICAL DRAWINGS FOR FIRE ALARM NOTIFICATION AND EMERGENCY EGRESS LIGHTING LOCATIONS.

C. REFER TO PARTITION TYPES FOR FURTHER FIRE SEPARATION REQUIREMENTS.

D. ALL FIRE RATED ASSEMBLIES SHALL BE INSTALLED IN STRICT ACCORDANCE WITH TESTED ASSEMBLIES INDICATED.

E. WHERE A RATING HAS BEEN GIVEN TO AN EXISTING WALL, ALL PENETRATIONS (EXISTING OR NEW) SHALL BE SEALED AND PROPERLY FIREPROOFED PER THAT RATING REQUIREMENT

F. EXTEND FIRE RATED PARTITIONS, BARRIERS, AND OTHER SEPARATIONS TO BOTTOM OF ROOF/FLOOR DECK ABOVE (OR AS DIRECTED BY UL ASSEMBLY) AND TO EXTERIOR WALL. SEAL JOINT BETWEEN EDGES OF PARTITION WITH FIRE RATED SEALANT AND/OR INTUMESCENT ASSEMBLY.

G. ALL PENETRATIONS OF FIRE-RATED ASSEMBLIES SHALL BE FIRE-SEALED IN ACCORDANCE WITH APPROVED MANUFACTURER'S DETAIL FOR LOCATION, TYPE OF CONSTRUCTION, PENETRATING ITEM AND RATING REQUIRED.

H. ALL DUCTWORK, DIFFUSERS, GRILLES, LIGHT FIXTURES, AND ELECTRICAL DEVICES PENETRATING FIRE-RATED OR SMOKE RESISTANT WALLS, CEILINGS, AND FLOORS SHALL HAVE THE APPROPRIATE TYPE OF FIRE/SMOKE DAMPER IN ACCORDANCE WITH THE TYPE OF CONSTRUCTION BEING PENETRATED AND THE FIRE/SMOKE RATING REQUIRED. ASSEMBLIES SHALL BE UL-LISTED FOR INSTALLATION IN THE ASSEMBLY AND SHALL BE INSTALLED SUCH THAT THE FIRE/SMOKE RATING IS NOT COMPROMISED. REFER TO MECHANICAL, ELECTRICAL, AND PLUMBING DRAWINGS FOR PENETRATIONS THAT MAY NOT BE SHOWN HERE.

I. SMOKE RESISTANT CONSTRUCTION SHALL MEET THE REQUIREMENTS OF ALL APPLICABLE CODES. AREA SHALL BE SEPARATED FROM THE REMAINDER OF THE BUILDING AND BE OF CONSTRUCTION CAPABLE OF RESISTING THE PASSAGE OF SMOKE. THE PARTITIONS SHALL EXTEND FROM THE FLOOR TO THE UNDERSIDE OF THE FLOOR OR ROOF ASSEMBLY ABOVE. DOORS SHALL BE SELF OR AUTOMATIC CLOSING. DOORS SHALL NOT HAVE AIR TRANSFER OPENINGS AND SHALL NOT BE UNDERCUT IN EXCESS OF CLEARANCE PERMITTED WITH ACCORDANCE TO NFPA 80.

OCCUPANT LOAD TABLE

NUMBER	NAME	AREA	OCCUPANCY FACTOR	OCCUPANT LOAD
LEVEL 1				
1201	PASSAGE	159 SF		
1202	FOLDING	265 SF	200 SF	2
1203	OFFENDER RR	44 SF		
1204	LAUNDRY	881 SF	100 SF	9
1205	DRYER CHASE	414 SF	300 SF	2
1206	CHEMICAL STORAGE	323 SF	300 SF	2
1207	ELEC.	246 SF	300 SF	1
1208	PASSAGE	250 SF	200 SF	0
1209	DISHROOM	2475 SF	200 SF	13
1210	CART WASH	94 SF	200 SF	1
1211	DIRECTOR OFF	194 SF	100 SF	2
1212	STAFF BREAK RM	321 SF	100 SF	4
1213	STAFF RR	44 SF		
1214	HOT PRO & ASSEMBLY	1909 SF	200 SF	10
1215	POT & PAN STOR	301 SF	200 SF	2
1216	POT & PAN WASH	171 SF	200 SF	1
1217	COLD PRO & ASSEMBLY	640 SF	200 SF	4
1218	SUPERVISOR OFF.	183 SF	100 SF	2
1219	LNDRY & CHEM STOR	254 SF	300 SF	1
1220	BAKERY	2105 SF	200 SF	11
1221	OFFENDER RR	46 SF		
1221A	OFFENDER BREAK	228 SF		8
1222	JAN	38 SF	300 SF	1
1223	CART PARKING	383 SF	300 SF	2
1224	STOR	139 SF	300 SF	1
1225	TOOL CONTROL	46 SF	300 SF	1
1226	BAKERY REF	81 SF	300 SF	1
1227	BAKERY FRZR	90 SF	300 SF	1
1228	PRODUCE ISSUE	207 SF	300 SF	1
1229	PRODUCE REF	504 SF	300 SF	2
1230	MEAT & DAIRY ISSUE	115 SF	300 SF	1
1231	MEAT & DAIRY REF.	324 SF	300 SF	2
1232	FRZR ISSUE	144 SF	300 SF	1
1233	FREEZER	895 SF	300 SF	4
1234	TEMPERING	232 SF	300 SF	1
1235	INGR & DRY GOOD ISSUE	257 SF	300 SF	1
1237	CORRIDOR	630 SF		
1238	INGREDIENT ASSEMBLY	251 SF	200 SF	2
1239	DRY STORAGE	1842 SF	300 SF	7
1240	RECEIVING	277 SF	300 SF	1
1241	MECH	535 SF	300 SF	2
LEVEL 2				
2100	MECH	1650 SF	300 SF	6
TOTAL OCCUPANTS:				113

EGRESS PATH A

PATH ID	LENGTH
A	191' - 3 7/16"
TOTAL PATH LENGTH	191' - 3 7/16"

EGRESS PATH B

PATH ID	LENGTH
B	180' - 1 1/32"
TOTAL PATH LENGTH	180' - 1 1/32"

EGRESS PATH C

PATH ID	LENGTH
C	327' - 0 7/32"
TOTAL PATH LENGTH	327' - 0 7/32"

PLUMBING FIXTURES PER STATE PLUMBING CODE

OCCUPANT TYPE	NO. OF OCC.	WATER CLOSETS	LAVATORIES	DRINKING FOUNTAINS	SERVICE SINKS	NOTES
		REQUIRED	REQUIRED	REQUIRED	REQUIRED	
STAFF	22	1 : 25 = 1	1 : 25 = 1	1 : 100 = 1	1	
OFFENDERS	90	1 : 100 = 1	1 : 400 = 1	1 : 400 = 1	1	NOTE 1
TOTALS	113	2	2	NA	2	
WATER CLOSETS PROVIDED:			2 Offender + 1 Employee = 3 Total			
LAVATORIES PROVIDED:			2 Offender + 1 Employee = 3 Total			
DRINKING FOUNTAINS PROVIDED:			--			NOTE 2
SERVICE SINKS PROVIDED:			2 Service Sinks			

NOTES:
1. PLUMBING FIXTURE COUNT REQUIREMENT IS BASED ON FACTORY AND INDUSTRIAL CLASSIFICATION AS IT MOST CLOSELY ALIGNS WITH THE USE OF THE SPACE AS A COMMERCIAL KITCHEN & LAUNDRY FACILITY
2. BEVERAGE OPTIONS WILL BE MADE AVAILABLE TO OCCUPANTS IN LIEU OF DRINKING FOUNTAINS FOR SECURITY & SAFETY PURPOSES

CODE INFORMATION

CLARINDA CORRECTIONAL FACILITY - KITCHEN & LAUNDRY...
2000 N 16TH ST, CLARINDA, IA 51632

WORK DESCRIPTION

BUILDING ADDITION CONSISTING OF A KITCHEN & LAUNDRY... CORRECTIONAL FACILITY.

APPLICABLE CODES

2015 INTERNATIONAL BUILDING CODE
2012 INTERNATIONAL ENERGY CONSERVATION CODE
2021 INTERNATIONAL MECHANICAL CODE
2015 INTERNATIONAL FIRE CODE
2020 NATIONAL ELECTRIC CODE
2012 NFPA LIFE SAFETY CODE
2010 AMERICANS WITH DISABILITIES ACT
2021 UNIFORM PLUMBING CODE

BUILDING CONSTRUCTION AND OCCUPANCY

PROPOSED BUILDING
CONSTRUCTION TYPE: IIB
PRIMARY OCCUPANCY: I-3
SPRINKLERED - NFPA 13

BUILDING HEIGHT AND AREA

ALLOWABLE AREA (CONST TYPE): 32,975 SF/FLOOR
PROPOSED AREA (CONST TYPE):

	TOTAL/FLOOR
FIRST FLOOR	22,250 SF
SECOND FLOOR	1,800 SF
PROJECT TOTAL AREA	24,050 SF

ALLOWABLE BUILDING HEIGHT (CONST TYPE):	2 STORIES	75 FEET
PROPOSED BUILDING HEIGHT:	2 STORIES	32 FEET

FIRE RATING

PRIMARY STRUCTURAL FRAME	0 HR
EXTERIOR BEARING WALLS	0 HR
INTERIOR BEARING WALLS	0 HR
EXTERIOR NON-BEARING WALLS (SIZING)	0 HR
EXTERIOR NON-BEARING WALLS (SIZING)	0 HR
FLOOR CONST/SECONDARY MEMBERS	0 HR
ROOF CONST/SECONDARY MEMBERS	0 HR
CORRIDORS (CONST TYPE)	0 HR

EGRESS

EXIT TRAVEL DISTANCE	200 FT MAX
DEAD END CORRIDORS	50 FT MAX
EGRESS CORRIDOR WIDTH	2" x OCC LOAD
EGRESS DOOR WIDTH	2" x OCC LOAD
EGRESS STAIR WIDTH	36"

PRECAST WALLS: IBC 2015
TABLE 722.2.1.1 MIN. EQUIVALENT THICKNESS OF PRECAST CONC WALLS

CONC. TYPE	MIN. SLAB THICKNESS FOR 2 HR (INCHES)
SILICEOUS	5.0
CARBONATE	4.6
SAND-LIGHTWEIGHT	3.8
LIGHTWEIGHT	3.6

EXISTING INSULATED PRECAST PANELS ARE 4" CONC. + 3" INSULATION + 3" CONC.

THEREFORE, ASSUMING THE WORST CASE SCENARIO OF SILICEOUS TYPE CONC., 5" SILICOUS CONC. < 7" TOTAL EXISTING THICKNESS OF CONC.

NEW PRECAST SHALL USE LIGHTWEIGHT CONC WITH AN ASSEMBLY OF 3" CONC. + 4" INSULATION + 3" CONC. FOR A TOTAL CONC. THICKNESS OF 7"

THEREFORE, NEW & EXISTING PRECAST ARE 2 HR RATED

LIFE SAFETY LEGEND

FIRE RATINGS

1FB — 1 HOUR FIRE BARRIER WALL
1FP — 1 HOUR FIRE PARTITION WALL
1FW — 1 HOUR FIRE WALL
2FB — 2 HOUR FIRE BARRIER WALL
2FW — 2 HOUR FIRE WALL
4FB — 4 HOUR FIRE BARRIER WALL
4FW — 4 HOUR FIRE WALL

EGRESS

TRAVEL DISTANCE TO AN EXIT
DEAD END CORRIDOR
XX — EGRESS PATH TAG
EXIT IDENTIFICATION
EGRESS CLEAR WIDTH
EXTERIOR EXIT 0" 180" — EGRESS CAPACITY
DE — DELAYED EGRESS

OCCUPANCY

Name 00 — ROOM NAME / OCCUPANCY LOAD

MISCELLANEOUS

FEC — FIRE EXTINGUISHER CABINET
FEB — FIRE EXTINGUISHER BRACKET

LINE WORK LEGEND

EXISTING
NEW CONSTRUCTION

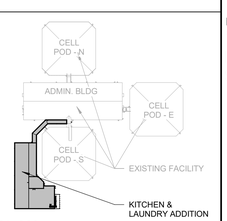

KEY PLAN
SCALE: 1" = 200'-0"

Farnsworth GROUP
14225 UNIVERSITY AVENUE, SUITE 110
WALKER, IOWA 52263
(515) 225-3469 / info@f-w.com
www.f-w.com
Engineers | Architects | Surveyors | Scientists

RIPPE ASSOCIATES
FOODSERVICE DESIGN + CONSULTING

kpff

IMEG

Bishop Engineering

ISSUE:

#	DATE:	DESCRIPTION:
1	02/22/2024	ADDENDUM 1.0

BID SET

PROJECT:
STATE OF IOWA DEPARTMENT OF CORRECTIONS

CLARINDA CORRECTIONAL FACILITY - KITCHEN & LAUNDRY ADDITION

2000 N 16TH ST, CLARINDA, IA 51632

DATE:	02/09/2024
DESIGNED:	KDV
DRAWN:	KDV
REVIEWED:	KDV

SHEET TITLE:
FIRST FLOOR LIFE SAFETY

SHEET NUMBER:
LS1.1

PROJECT NO.: 0240202.00
RFB922300-02

FOODSERVICE EQUIPMENT SCHEDULE - AREA A			
ITEM #	QTY	DESCRIPTION	REMARKS
1	3	RECEIVING CART	BY OWNER
2	1	WALKIE PALLET JACK	
3	2	TILT TRUCK	
4	17	DUNNAGE RACK	
5	20	DRY STORAGE SHELVING	BY OWNER
6	3	STAINLESS STEEL CORNER GUARD	
7A	1	WALK-IN REFRIGERATOR/FREEZER COMPLEX	
7B	2	FREEZER FLOOR HEAT	
8A	1	RACKED REFRIGERATION SYSTEM	
9	1	MANUAL SLIDING DOOR (REF)	
10	1	OPEN NUMBER	
11	2	HEATED AIR CURTAIN	
12	2	AIR CURTAIN	
13	1	MANUAL SLIDING DOOR (FRZ)	
14	3	SWINGING SEE-THRU DOOR	
15	54	REFRIGERATOR/FREEZER SHELVING	
16	3	SECURITY FENCE	
17	6	MOBILE DUNNAGE RACK	
18	1	HAND SINK	
19	3	MOBILE LUG RACK	
20	1	FLOOR TROUGH	
21	1	SHADOW BOX SECURITY CABINET	
22	1	WORKCOUNTER W/SINK	
23	1	WALL CABINET W/SHELF	
24	1	MOBILE TRASH BIN	BY OWNER
25	1	MOBILE EQUIPMENT STAND	
26	1	BENCH SCALE	
27	1	MOBILE WORKTABLE	
28	11	UTILITY CART	BY OWNER
29	4	INGREDIENT DELIVERY CART	BY OWNER
30	4	OVEN RACK, DOUBLE	ADD ALTERNATE - ALT 3
31-33	1	OPEN NUMBER	
34	1	FOOD CUTTER	ADD ALTERNATE - ALT 3
35	1	MOBILE EQUIPMENT STAND	
36	1	SECURITY FENCE	
37	5	BAKERY DRY STORAGE SHELVING	ADD ALTERNATE - ALT 2
38	1	SECURITY FENCE	
39	1	MOBILE MIXING BOWL, 80 QT	ADD ALTERNATE - ALT 2
40	13	MOBILE HOT/COLD TRANSPORT CART	BY OWNER
41A	1	UTILITY DISTRIBUTION SYSTEM	
41B	1	UTILITY DISTRIBUTION SYSTEM	
42-59	1	OPEN NUMBER	

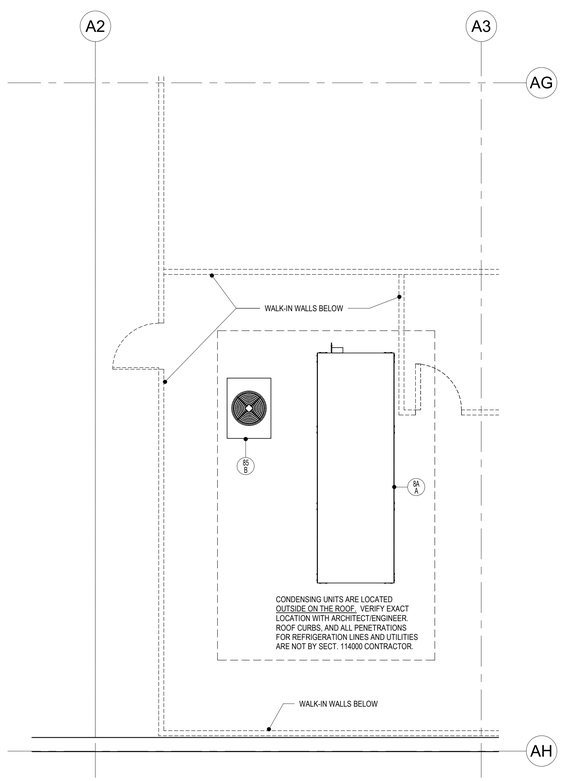

2 FOODSERVICE EQUIPMENT PLAN - ROOF
1/4" = 1'-0"

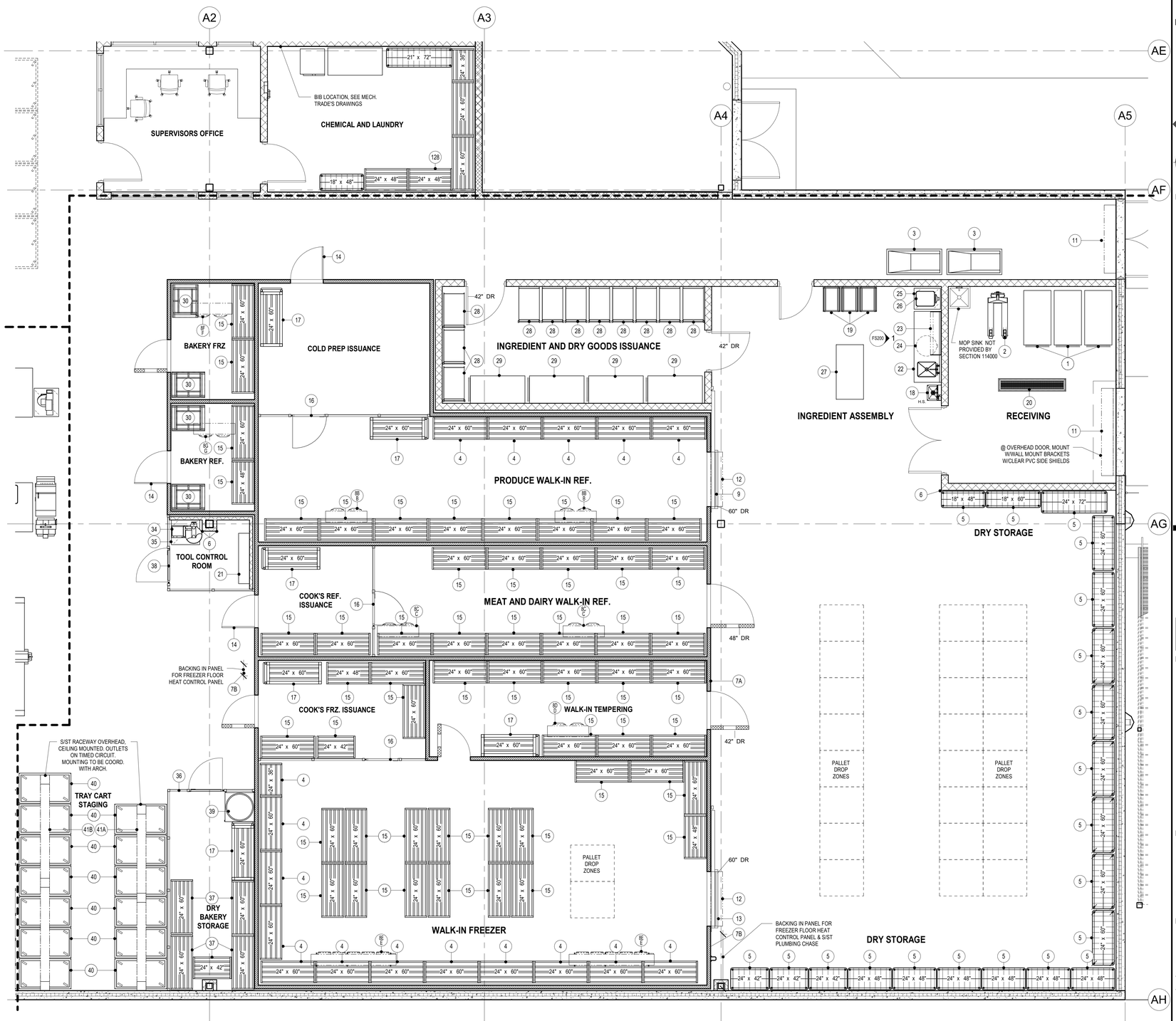

1 FOODSERVICE EQUIPMENT PLAN - AREA 1
1/4" = 1'-0"

Farnsworth GROUP
14225 UNIVERSITY AVENUE, SUITE 110
WALKEE, IOWA 50263
(515) 225-3469 / info@f-w.com
www.f-w.com
Engineers | Architects | Surveyors | Scientists
RIPPE ASSOCIATES
FOODSERVICE DESIGN + CONSULTING
kpff
IMEG
Bishop Engineering

ISSUE:

#	DATE:	DESCRIPTION:
1.0	02/22/2024	ADDENDUM 1.0

BID SET

PROJECT:
STATE OF IOWA DEPARTMENT OF CORRECTIONS

CLARINDA CORRECTIONAL FACILITY - KITCHEN & LAUNDRY ADDITION

2000 N 16TH ST, CLARINDA, IA 51632

DATE:	02/09/2024
DESIGNED:	EG/TP
DRAWN:	MM/BB
REVIEWED:	EG/RB

SHEET TITLE:
FOODSERVICE EQUIPMENT PLAN AND SCHEDULE - AREA 1

SHEET NUMBER:
FS101

PROJECT NO.: 0240202.00
RFB922300-02

2/22/2024 12:23:3 PM

FOODSERVICE EQUIPMENT SCHEDULE - AREA B			
ITEM #	QTY	DESCRIPTION	REMARKS
60	16	MOBILE RACK	BY OWNER
61	3	PAN STORAGE SHELVING	
62	1	WORKCOUNTER W/SINK	
63	1	140 QUART MIXER	ADD ALTERNATE - ALT 2
64	1	WATER METER W/TEMPERATURE RANGE	ADD ALTERNATE - ALT 2
65	1	MOBILE TRASH BIN	BY OWNER
66	4	MOBILE INGREDIENT BIN	ADD ALTERNATE - ALT 2
67	1	SPIRAL MIXER	ADD ALTERNATE - ALT 2
68	1	HAND SINK	
69	1	SHEETER	ADD ALTERNATE - ALT 2
70	1	STAINLESS STEEL WALL CAP	
71	2	DIGITAL BENCH SCALE	ADD ALTERNATE - ALT 2
72	4	STAINLESS STEEL CORNER GUARD	
73	2	OVEN RACK, DOUBLE	ADD ALTERNATE - ALT 2
74	1	ROLL-IN PROOFER, 2 DOUBLE RACKS	ADD ALTERNATE - ALT 2
75	2	FLOOR TROUGH	
76	1	OPEN NUMBER	
77	2	BAKERY WORKCOUNTER W/RICHLITE TOP	ADD ALTERNATE - ALT 2
78	1	DIVIDER ROUNDER	ADD ALTERNATE - ALT 2
79	1	BREAD SLICER	ADD ALTERNATE - ALT 2
80	1	OPEN NUMBER	
81	2	SHEET PAN DOLLY	ADD ALTERNATE - ALT 2
82	1	MOBILE EQUIPMENT STAND	ADD ALTERNATE - ALT 2
83	1	BUN SLICER	ADD ALTERNATE - ALT 2
84	6	OVEN RACK, DOUBLE	ADD ALTERNATE - ALT 3
85	1	ROLL-IN BLAST CHILLER	
86	1	OPEN NUMBER	
87	2	RACK OVEN, 2-SEC	ADD ALTERNATE - ALT 3
88	1	OPEN NUMBER	
89	1	FIRE PROTECTION SYSTEM	
90	1	FIRE PROTECTION SYSTEM	
91	1	ICE MAKER	
92	1	ICE BIN	
93	1	FLOOR TROUGH	
94-99	1	OPEN NUMBER	

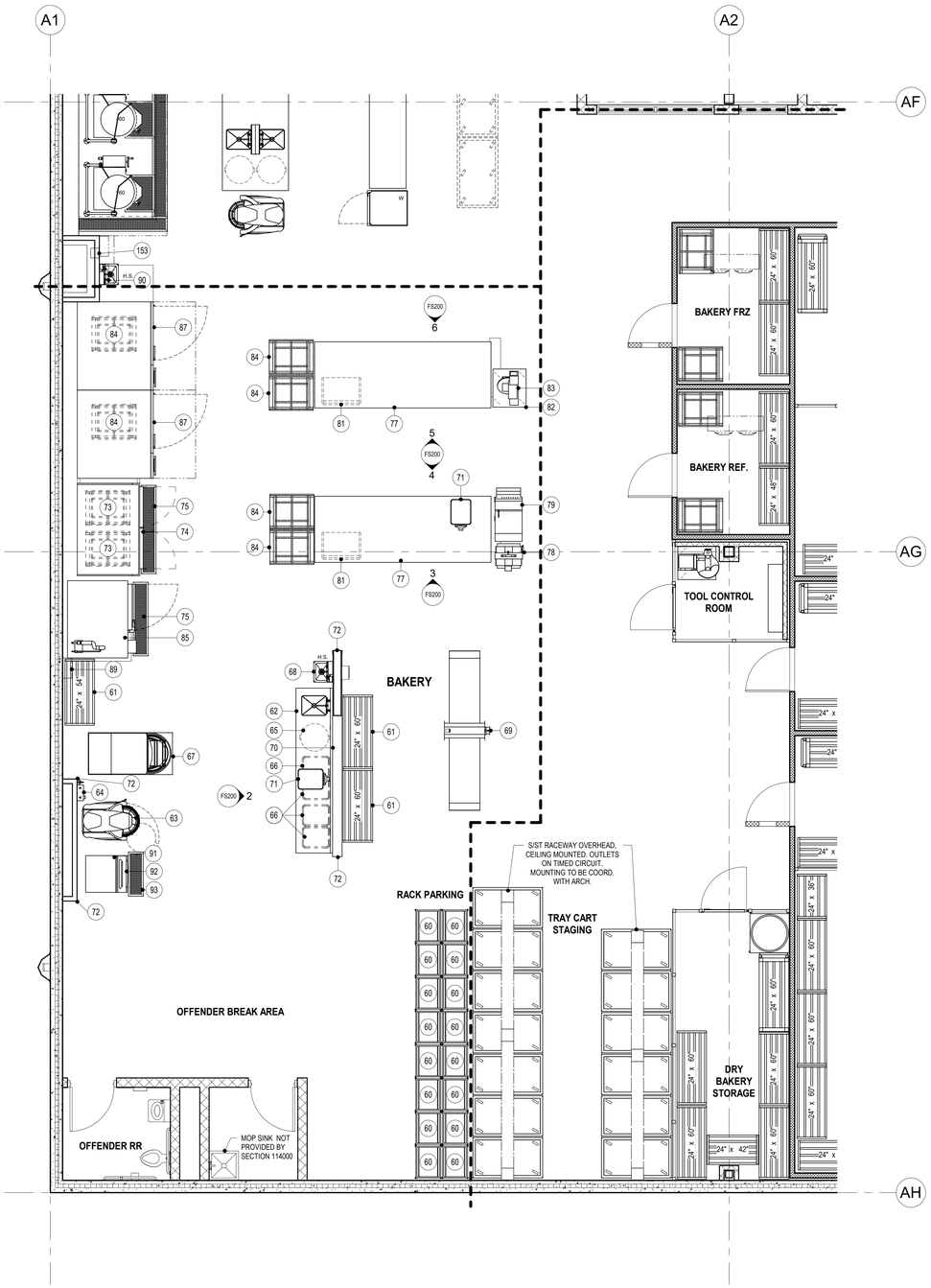

1 FOODSERVICE EQUIPMENT PLAN - AREA 2
1/4" = 1'-0"

Farnsworth GROUP
14225 UNIVERSITY AVENUE, SUITE 110
WALKEE, IOWA 50263
(515) 225-3469 / info@f-w.com
www.f-w.com
Engineers | Architects | Surveyors | Scientists
RIPPE ASSOCIATES
FOODSERVICE DESIGN + CONSULTING
kpff
IMEG
Bishop Engineering

ISSUE:

#	DATE:	DESCRIPTION:
1.0	02/22/2024	ADDENDUM 1.0

BID SET

PROJECT:
STATE OF IOWA DEPARTMENT OF CORRECTIONS

CLARINDA CORRECTIONAL FACILITY - KITCHEN & LAUNDRY ADDITION

2000 N 16TH ST, CLARINDA, IA 51632

DATE:	02/09/2024
DESIGNED:	EG/TP
DRAWN:	MM/BB
REVIEWED:	EG/RB

SHEET TITLE:

FOODSERVICE EQUIPMENT PLAN AND SCHEDULE - AREA 2

SHEET NUMBER:

FS102

PROJECT NO.: 0240202.00
RFB922300-02

2/20/2024 8:59:19 AM

FOODSERVICE EQUIPMENT SCHEDULE - AREA C

ITEM #	QTY	DESCRIPTION	REMARKS
100	7	HAND SINK	
101A	5	PAN STORAGE SHELVING	
101B	6	PAN STORAGE SHELVING	BY OWNER
102	3	MOBILE LUG RACK	
103	1	UTILITY CART	BY OWNER
104	1	WORKCOUNTER W/SINKS	
105	8	MOBILE TRASH BIN	BY OWNER
106	1	OPEN NUMBER	
107	1	SPRAY RINSE	
108	1	WALL SHELF	
109	1	FOOD PROCESSOR	ADD ALTERNATE - ALT 3
110	1	OPEN NUMBER	
111	21	STAINLESS STEEL CORNER GUARD	
112	1	REACH-IN REFRIGERATOR, 2-SEC.	ADD ALTERNATE - ALT 3
113	1	MOBILE EQUIPMENT STAND	
114	1	SLICER	ADD ALTERNATE - ALT 3
115	2	DOUBLE WIDE WORKTABLE	
116	1	HORIZONTAL CUTTER/MIXER	ADD ALTERNATE - ALT 2
117	1	FLOOR TROUGH	
118	1	HOSE STATION	
119	1	HOSE STATION SECURITY CABINET	
120-127	1	OPEN NUMBER	
128	5	CHEMICAL STORAGE SHELVING	
129	1	MOBILE WORKTABLE	
130	1	OPEN NUMBER	
131	2	CHEMICAL STORAGE SHELVING	BY OWNER
132	1	STACKED WASHER/DRYER	
133	1	OPEN NUMBER	
134	3	STAINLESS STEEL WALL CAP	
135-139	1	OPEN NUMBER	
140	2	MOBILE WORKTABLE	
141	2	WORKCOUNTER	ADD ALTERNATE - ALT 3
142	5	MOBILE WARMING CABINET	
143	16	MOBILE RACK	BY OWNER
144	1	80 QUART MIXER	ADD ALTERNATE - ALT 3
145	1	WORKCOUNTER W/SINKS	
146	1	WORKCOUNTER W/SINKS	
147	2	SHEET PAN DOLLY	
148	1	EXHAUST HOOD (TYPE I)	
149	1	STAINLESS STEEL WALL PANEL	
150	1	UTILITY DISTRIBUTION SYSTEM	
151	1	FIRE PROTECTION SYSTEM	
152	1	OPEN NUMBER	
153	1	DEMAND CONTROL VENTILATION SYSTEM	
154	2	60 GALLON KETTLE	
155	2	80 GALLON KETTLE	
156	1	FLOOR TROUGH	
157	1	OPEN NUMBER	
158	2	STEAMER, 2-SEC.	ADD ALTERNATE - ALT 3
159	1	OPEN NUMBER	
160	1	STEAMER, 2-SEC.	ADD ALTERNATE - ALT 3
161	1	STEAMER, 2-SEC.	
162	1	HOSE REEL	
163	2	RACK OVEN, 2-SEC.	
164	2	OVEN RACK, DOUBLE	
165-167	1	OPEN NUMBER	
168	3	HOSE REEL SECURITY CABINET	
169	1	FIRE PROTECTION SYSTEM	
170	1	FIRE PROTECTION SYSTEM	
171	1	OPEN NUMBER	
172	2	POT AND PAN CART	
173	1	POT & PAN SINK	
174	1	DISPOSER	
175	1	SPRAY RINSE	
176-180	1	OPEN NUMBER	
181	1	CART WASH STAINLESS STEEL WALL PANEL	
182	1	HOSE STATION	
183	1	FLOOR TROUGH	
184	2	HOSE REEL	
185	2	EYE/FACE WASH STATION	
186	1	SOILED DISHTABLE	
187	2	DISPOSER	
188	1	HOSE STATION SECURITY CABINET	
189	1	FLIGHT-TYPE DISHMACHINE W/DRYER	
190	1	EXHAUST DUCT RISER	
191	2	SPRAY RINSE	
192	1	FLOOR TROUGH	
193	12	DRYING RACK	BY OWNER
194	1	FLOOR TROUGH	
195	1	CONDENSATE HOOD	

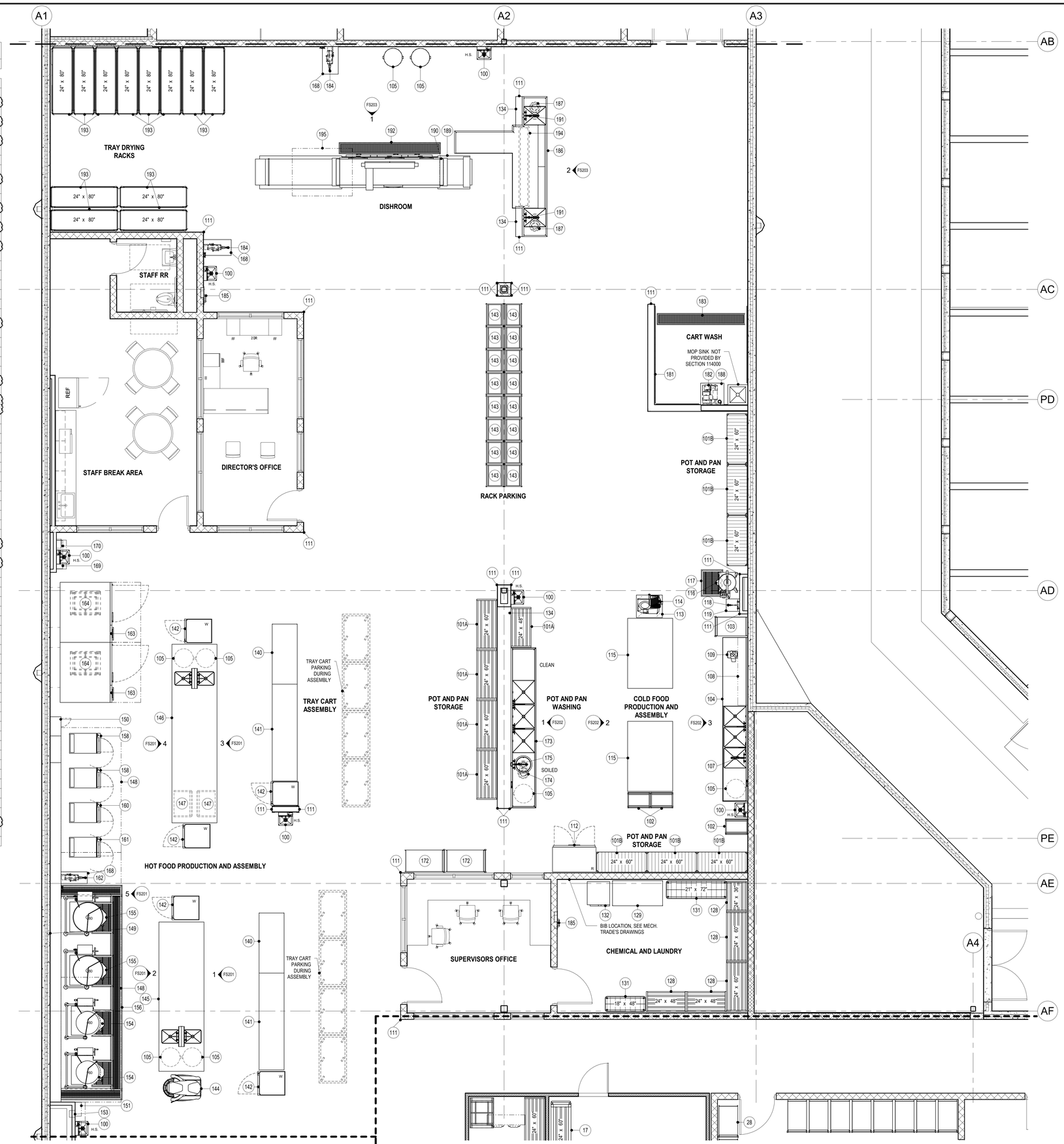

1 FOODSERVICE EQUIPMENT PLAN - AREA 3
1/4" = 1'-0"

Farnsworth GROUP
14225 UNIVERSITY AVENUE, SUITE 110
WALKEE, IOWA 50263
(515) 225-3469 / info@f-w.com
www.f-w.com
Engineers | Architects | Surveyors | Scientists

RIPPE ASSOCIATES
FOODSERVICE DESIGN + CONSULTING

kpff

IMEG

Bishop Engineering

ISSUE:

#	DATE:	DESCRIPTION:
1.0	02/22/2024	ADDENDUM 1.0

BID SET

PROJECT:
STATE OF IOWA DEPARTMENT OF CORRECTIONS

CLARINDA CORRECTIONAL FACILITY - KITCHEN & LAUNDRY ADDITION

2000 N 16TH ST, CLARINDA, IA 51632

DATE:	02/09/2024
DESIGNED:	EG/TP
DRAWN:	MM/BB
REVIEWED:	EG/RB

SHEET TITLE:

FOODSERVICE EQUIPMENT PLAN AND SCHEDULE - AREA 3

SHEET NUMBER:

FS103

PROJECT NO.: 0240202.00
RFB922300-02

2/20/2024 8:59:25 AM

FOODSERVICE EQUIPMENT ELECTRICAL SCHEDULE

	ITEM #	DESCRIPTION		VOLTS	PHASE	AMPS	WATTS	HP	CONN. TYPE	RI HEIGHT	REMARKS
	7A	WALK-IN REFRIGERATOR/FREEZER COMPLEX		120 V	1	20.0 A			DIRECT	114"	DFA / NOTE W / SEE DETAIL SD-191
	7B	FREEZER FLOOR HEAT	A	208 V	1				DIRECT	48"	DFA / COOK'S ISSUANCE FLOOR HEAT / NOTE W / SEE DETAIL SD-188 / 30 AMP BREAKER / (1) CIRCUIT
	7B	FREEZER FLOOR HEAT	B	208 V	1				DIRECT	48"	DFA / MAIN FREEZER FLOOR HEAT / NOTE W / SEE DETAIL SD-188 / 30 AMP BREAKER / (3) CIRCUITS ON ONE CONTACTOR
	8A	RACKED REFRIGERATION SYSTEM	A	208 V	3	138.9 A			DIRECT	0"	NOTE D & W / MAX FUSE SIZE 175.0 AMPS / MIN CIRCUIT AMPACITY 148.4 AMPS
	8B	REFRIGERATION SYSTEM COIL - PRODUCE REFRIGERATOR	B	120 V	1	1.8 A			DIRECT	96"	NOTE W / (2) COILS @ 1.8 AMPS EACH
	8C	REFRIGERATION SYSTEM COIL - MEAT & DAIRY REFRIGERATOR	C	120 V	1	1.8 A			DIRECT	96"	NOTE W / (2) COILS @ 1.8 AMPS EACH
	8D	REFRIGERATION SYSTEM COIL - TEMPERING REFRIGERATOR	D	208 V	1	13.7 A			DIRECT	96"	NOTE W
	8E	FREEZER SYSTEM COIL - MAIN FREEZER	E	208 V	1	22.8 A			DIRECT	96"	NOTE W / (2) COILS @ 22.8 AMPS EACH
	8F	FREEZER SYSTEM COIL - BAKERY FREEZER	F	208 V	1	9.1 A			DIRECT	96"	NOTE W
	8G	REFRIGERATION SYSTEM COIL - BAKERY REFRIGERATOR	G	120 V	1	1.8 A			DIRECT	96"	NOTE W
	11	HEATED AIR CURTAIN	A	480 V	3	22.0 A		1/2, 1/2	DIRECT	96"	PROVIDE 30 AMP CIRCUIT
	11	HEATED AIR CURTAIN	B	480 V	3	28.3 A		1/2, 1/2	DIRECT	96"	PROVIDE 35 AMP CIRCUIT
	12	AIR CURTAIN		120 V	1	3.4 A		1/5, 1/5	DIRECT	96"	PROVIDE 15 AMP CIRCUIT
	13	MANUAL SLIDING DOOR (FRZ)		120 V	1	3.0 A			DIRECT	86"	ELECTRICAL TRADES TO PROVIDE AND INSTALL FROSTOP DISCONNECT KEYSWITCH / FINAL CONNECTIONS BY ELECTRICAL TRADES
	26	BENCH SCALE		120 V	1				RECEPT.	18"	AC ADAPTER W/INTERNAL BATTERY
1.0	34	FOOD CUTTER		120 V	1	13.0 A		1	RECEPT.	60"	INTERCHANGEABLE PLUG IN LOCATION W/ITEM #114 / ADD ALTERNATE / ELECTRICAL TRADES TO ROUGH IN AND CAP AS NEEDED
	40	MOBILE HOT/COLD TRANSPORT CART		120 V	1				RECEPT.	0"	VFY. UTILITIES W/OWNER / (13) CIRCUITS SERVICED THRU #41A & B
	41A	UTILITY DISTRIBUTION SYSTEM		120 V	1				DIRECT	126"	(6) 20.0 AMP CIRCUITS TO SERVICE (6) #40 / FSEC TO PREWIRE RECEPTACLES IN UDS / FINAL CONNECTIONS BY ELECTRICAL TRADES / SEE SHEET FSE101
	41B	UTILITY DISTRIBUTION SYSTEM		120 V	1				DIRECT	126"	(7) 20.0 AMP CIRCUITS TO SERVICE (7) #40 / FSEC TO PREWIRE RECEPTACLES IN UDS / FINAL CONNECTIONS BY ELECTRICAL TRADES / SEE SHEET FSE102
	62	WORKCOUNTER W/SINK		120 V	1				DIRECT	10"	NOTE A / STUB UP THRU ADJACENT WALL / (3) 20.0 AMP CIRCUITS TO SERVICE (1) #71 & (2) CONV. DRS
	63	140 QUART MIXER		208 V	3	14.8 A		5	DIRECT	60"	ADD ALTERNATE / ELECTRICAL TRADES TO ROUGH-IN AND CAP AS NEEDED
	64	WATER METER W/TEMPERATURE RANGE		120 V	1	5.0 A			RECEPT.	54"	ADD ALTERNATE / ELECTRICAL TRADES TO ROUGH-IN AND CAP AS NEEDED
	67	SPIRAL MIXER		208 V	3	32.0 A		15	DIRECT	48"	ADD ALTERNATE / ELECTRICAL TRADES TO ROUGH-IN AND CAP AS NEEDED
	69	SHEETER		120 V	1	8.3 A			RECEPT.	60"	ADD ALTERNATE / ELECTRICAL TRADES TO ROUGH-IN AND CAP AS NEEDED
	71	DIGITAL BENCH SCALE	A	120 V	1				DUPLEX	0"	AC ADAPTER W/INTERNAL BATTERY
	71	DIGITAL BENCH SCALE	B	120 V	1				DUPLEX	0"	SERVICED THRU #77A / ADD ALTERNATE / ELECTRICAL TRADES TO ROUGH-IN AND CAP AS NEEDED / AC ADAPTER W/INTERNAL BATTERY
	74	ROLL-IN PROOFER, 2 DOUBLE RACKS		208 V	3		5000 W		DIRECT	90"	NEUTRAL WIRE CIRCUITRY NEEDED TO PROVIDE 120V CONTROL / ADD ALTERNATE / ELECTRICAL TRADES TO ROUGH-IN AND CAP AS NEEDED
	77	BAKERY WORKCOUNTER W/RICHLITE TOP	A	120 V	1				DIRECT	10"	NOTE A / STUB UP THRU CURB / (4) 20.0 AMP CIRCUITS TO SERVICE (2) CONV. DRS & #71B & 79
	77	BAKERY WORKCOUNTER W/RICHLITE TOP	AA	120 V	1				DIRECT	10"	NOTE A / STUB UP THRU CURB / (4) 20.0 AMP CIRCUITS TO SERVICE (3) CONV. DRS & (1) #83
	77	BAKERY WORKCOUNTER W/RICHLITE TOP	B	208 V	3				DIRECT	10"	NOTE A / STUB UP THRU CURB / (1) 20.0 AMP CIRCUIT TO SERVICE #78
	78	DIVIDER ROUNDER		208 V	3	10.0 A		3/4	DIRECT	0"	SERVICED THRU #77B / ADD ALTERNATE / ELECTRICAL TRADES TO ROUGH-IN AND CAP AS NEEDED
	79	BREAD SLICER		120 V	1	7.0 A		1/2	RECEPT.	0"	SERVICED THRU #77A / ADD ALTERNATE / ELECTRICAL TRADES TO ROUGH-IN AND CAP AS NEEDED
	83	BUN SLICER		120 V	1	6.8 A	816 W	1/3	RECEPT.	0"	SERVICED THRU #77AA / ADD ALTERNATE / ELECTRICAL TRADES TO ROUGH-IN AND CAP AS NEEDED
	85	ROLL-IN BLAST CHILLER	A	208 V	3	10.6 A	3400 W		DIRECT	106"	
	85	BLAST CHILLER REMOTE CONDENSING UNIT	B	208 V	3	53.3 A	16400 W	9	DIRECT	0"	
1.0	87	RACK OVEN, 2-SEC.		120/208 V	3		1800 W		DIRECT	90"	NOTE I & L / ADD ALTERNATE / ELECTRICAL TRADES TO ROUGH-IN AND CAP AS NEEDED
	89	FIRE PROTECTION SYSTEM	A	120 V	1				DIRECT		NOTE J, K & L / AT CEILING / WIRING FOR CONTROLS / SEE DETAIL / TO SERVE (1) #87
	89	ELECTRIC GAS VALVE	B	120 V	1				DIRECT	120"	DFA DEDICATED, NON-INTERRUPTED CIRCUIT
	90	FIRE PROTECTION SYSTEM	A	120 V	1				DIRECT		NOTE J, K & L / AT CEILING / WIRING FOR CONTROLS / SEE DETAIL / TO SERVE (1) #87
	90	ELECTRIC GAS VALVE	B	120 V	1				DIRECT	120"	DFA / DEDICATED, NON-INTERRUPTED CIRCUIT
	91	ICE MAKER		208 V	1	4.2 A			RECEPT.	66"	
	109	FOOD PROCESSOR		120 V	1	12.0 A		1.5	RECEPT.	52"	ADD ALTERNATE / ELECTRICAL TRADES TO ROUGH-IN AND CAP AS NEEDED
1.0	112	REACH-IN REFRIGERATOR, 2-SEC.		120 V	1	10.7 A		1/3	RECEPT.	84"	ADD ALTERNATE / ELECTRICAL TRADES TO ROUGH-IN AND CAP AS NEEDED
	114	SLICER		120 V	1	6.0 A	720 W	1/2	RECEPT.	60"	INTERCHANGEABLE PLUG IN LOCATION W/ITEM #34 / ADD ALTERNATE / ELECTRICAL TRADES TO ROUGH-IN AND CAP AS NEEDED
	116	HORIZONTAL CUTTER/MIXER		208 V	3	22.0 A		5	RECEPT.	18"	PROVIDE 30 AMP CIRCUIT / ADD ALTERNATE / ELECTRICAL TRADES TO ROUGH IN AND CAP AS NEEDED
	132	STACKED WASHER/DRYER	A	120 V	1			.9	RECEPT.	30"	PROVIDE 15 AMP CIRCUIT
	132	STACKED WASHER/DRYER	B	120 V	1			1/3	RECEPT.	30"	PROVIDE 15 AMP CIRCUIT
	142	MOBILE WARMING CABINET	A	120 V	1	12.0 A	1500 W		RECEPT.	0"	(1) SERVICED THRU #145 A (2) SERVICED THRU #146
	142	MOBILE WARMING CABINET	B	120 V	1	12.0 A	1500 W		RECEPT.	30"	
1.0	144	80 QUART MIXER		208 V	3	12.0 A		3	DIRECT	0"	SERVICED THRU #145 B / ADD ALTERNATE / ELECTRICAL TRADES TO ROUGH-IN AND CAP AS NEEDED
	145	WORKCOUNTER W/SINKS	A	120 V	1				DIRECT	10"	NOTE A / STUB UP THRU CURB / (4) 20.0 AMP CIRCUITS TO SERVICE (3) CONV. DRS & (1) #142A
	145	WORKCOUNTER W/SINKS	B	208 V	3				DIRECT	10"	NOTE A / STUB UP THRU CURB / (1) 20.0 AMP CIRCUIT TO SERVICE #144
	146	WORKCOUNTER W/SINKS		120 V	1				DIRECT	10"	NOTE A / STUB UP THRU CURB / (6) 20.0 AMP CIRCUITS TO SERVICE (4) CONV. DRS & (2) #142
	148	EXHAUST HOOD (TYPE I)	A	120 V	1		400 W		DIRECT	108"	DFA / NOTE I / SEE DETAIL
	148	EXHAUST HOOD (TYPE I)	B	120 V	1		400 W		DIRECT	108"	DFA / NOTE I / SEE DETAIL
	148	EXHAUST HOOD (TYPE I)	C	120 V	1		400 W		DIRECT	108"	DFA / NOTE I / SEE DETAIL
	150	UTILITY DISTRIBUTION SYSTEM		120/208 V	3	20.0 A			DIRECT	110"	DFA / NOTE Y
	151	FIRE PROTECTION SYSTEM	A	120 V	1				DIRECT		NOTE J, K & L / AT CEILING / WIRING FOR CONTROLS / SEE DETAIL / TO SERVE #148 A, B & C
	151	ELECTRIC GAS VALVE	B	120 V	1				DIRECT	120"	DFA / DEDICATED, NON-INTERRUPTED CIRCUIT
	153	DEMAND CONTROL VENTILATION SYSTEM		120 V	1	15.0 A			DIRECT	36"	SEE DETAIL / TO SERVICE HOOD #148
	154	60 GALLON KETTLE		120 V	1	10.0 A			RECEPT.	0"	NOTE L / SERVICED THRU #150
	155	80 GALLON KETTLE		120 V	1	10.0 A			RECEPT.	0"	NOTE L / SERVICED THRU #150
1.0	158	STEAMER, 2-SEC.	A	120 V	1	2.0 A			DIRECT	0"	NOTE L / SERVICED THRU #150 / FLEXIBLE CONDUIT / ADD ALTERNATE / ELECTRICAL TRADES TO ROUGH-IN AND CAP AS NEEDED
	160	STEAMER, 2-SEC.	A	120 V	1	2.0 A			DIRECT	0"	NOTE L / SERVICED THRU #150 / FLEXIBLE CONDUIT / ADD ALTERNATE / ELECTRICAL TRADES TO ROUGH-IN AND CAP AS NEEDED
	161	STEAMER, 2-SEC.	A	120 V	1	2.0 A			DIRECT	0"	NOTE L / SERVICED THRU #150 / FLEXIBLE CONDUIT
	163	RACK OVEN, 2-SEC.		120/208 V	3		1800 W		DIRECT	90"	NOTE I & L
	169	FIRE PROTECTION SYSTEM	A	120 V	1				DIRECT		NOTE J, K & L / AT CEILING / WIRING FOR CONTROLS / SEE DETAIL / TO SERVE (1) #163
	169	ELECTRIC GAS VALVE	B	120 V	1				DIRECT	120"	DFA / DEDICATED, NON-INTERRUPTED CIRCUIT
	170	FIRE PROTECTION SYSTEM	A	120 V	1				DIRECT		NOTE J, K & L / AT CEILING / WIRING FOR CONTROLS / SEE DETAIL / TO SERVE (1) #163
	170	ELECTRIC GAS VALVE	B	120 V	1				DIRECT	120"	DFA / DEDICATED, NON-INTERRUPTED CIRCUIT
	174	DISPOSER		208 V	3	8.8 A		3	DIRECT	18"	NOTE C / SEE DETAIL
	182	HOSE STATION		120 V	1			2	RECEPT.	84"	
	187	DISPOSER		208 V	3	8.8 A		3	DIRECT	18"	NOTE C / SEE DETAIL
	189	FLIGHT-TYPE DISHMACHINE W/DRYER	A	480 V	3	86.3 A			DIRECT	80"	DFA / NOTE I

GENERAL NOTES - ELECTRICAL

NOTE: GENERAL NOTES REFER TO GENERAL CONDITIONS. ALL CONDITIONS MAY NOT EXIST ON THIS PROJECT.

1. THESE DRAWINGS ARE FOR USE BY THE PROJECT ENGINEERS IN PREPARING THEIR DRAWINGS. THESE DRAWINGS ARE INCIDENTAL TO OUR SERVICES AND MUST BE REVIEWED AND APPROVED BY A PROPERLY LICENSED DESIGN PROFESSIONAL BEFORE BEING USED FOR ANY OTHER PURPOSES. RIPPE ASSOCIATES IS NOT LICENSED AS A DESIGN PROFESSIONAL AND DOES NOT HOLD ITSELF OUT AS SUCH.
2. SERVICES SHOWN ON THIS PLAN ARE EQUIPMENT REQUIREMENTS FOR FOODSERVICE EQUIPMENT ONLY. LOCATIONS, SIZES AND HEIGHTS ABOVE FINISHED FLOOR ARE APPROXIMATELY AS REQUIRED BY EQUIPMENT TO BE FURNISHED. SINCE MULTIPLE SOURCES FOR THE EQUIPMENT MAY BE SPECIFIED, SLIGHT VARIATIONS IN UTILITY LOADS, CONNECTION SIZES AND NEMA PLUG CONFIGURATIONS CAN OCCUR. DESIGN BUILDING UTILITY SYSTEM ACCORDINGLY AND ADD NOTES TO THE ELECTRICAL CONTRACT DOCUMENTS INDICATING SLIGHT VARIATIONS ARE TO BE INCLUDED IN ELECTRICAL TRADES WORK AT NO ADDITIONAL COST.
3. THESE DRAWINGS ARE NOT TO BE USED TO ROUGH-IN AND/OR TO SET SLEEVES BY. SINCE REQUIRED ALLOWANCES MUST BE MADE FOR MULTIPLE EQUIPMENT SOURCES AND FOR VALVES, FITTINGS, DISCONNECTS, ETC. WHICH WILL BE FURNISHED UNDER ELECTRICAL TRADES. FSEC IS RESPONSIBLE FOR PREPARING DIMENSIONED ROUGH-IN AND SLEEVE LOCATION PLANS PER SPECIFICATIONS TO ACCOMMODATE THE EXACT EQUIPMENT BEING PROVIDED.
4. ALL 120V DUPLEX RECEPTACLES TO BE MINIMUM 20 AMP. CIRCUIT AND MOUNTED VERTICALLY, UNLESS OTHERWISE NOTED ON PLAN.
5. ELECTRICAL TRADES TO PROVIDE ALL NECESSARY DISCONNECT SWITCHES FOR EQUIPMENT INSTALLED AHEAD OF EQUIPMENT CONTROL OR SWITCH.
6. THE FSEC IS RESPONSIBLE FOR SETTING THE EQUIPMENT IN PLACE. FINAL CONNECTION FOR THIS EQUIPMENT IS THE RESPONSIBILITY OF THE ELECTRICAL TRADES.
7. HOLES IN FOODSERVICE EQUIPMENT FOR ELECTRICAL SERVICES PROVIDED BY FSEC.
8. BUILDING POWER PANEL BREAKERS SERVING FOODSERVICE EQUIPMENT SHOULD BE EQUIPPED WITH GROUND FAULT INTERRUPT PROTECTION IN ACCORDANCE WITH NATIONAL ELECTRIC CODE FOLLOWED BY MUNICIPALITY AND/OR LOCAL CODE. DO NOT PROVIDE GROUND FAULT INTERRUPT RECEPTACLES AT THE EQUIPMENT UNLESS RECEPTACLE IS READILY ACCESSIBLE WITHOUT HAVING TO MOVE EQUIPMENT OR EMPLOY A STEP LADDER.
9. UTILITY CONNECTIONS SHOWN ARE THOSE REQUIRED TO SERVICE FOOD SERVICE EQUIPMENT ONLY. MECHANICAL TRADES SHOULD VERIFY WITH OWNER WHETHER ADDITIONAL UTILITIES ARE REQUIRED FOR EXISTING, FUTURE OR VENDOR FURNISHED NON-FOODSERVICE EQUIPMENT LOCATED WITHIN THE AREA SHOWN ON THIS PLAN.
10. DESIGN INCOMING UTILITY SERVICES TO ACCOMMODATE 100% OF THE LOADS INDICATED; DO NOT APPLY DIVERSITY FACTOR AS ALL EQUIPMENT CAN BE OPERATING SIMULTANEOUSLY DURING PEAK SERVICE PERIODS.

SCHEDULE NOTES - ELECTRICAL

NOTE: SCHEDULE NOTES PERTAIN TO INDIVIDUAL ITEMS AS INDICATED IN THE FOODSERVICE EQUIPMENT ELECTRICAL SCHEDULE.

A THE FSEC WILL PROVIDE RECEPTACLES IN FABRICATED EQUIPMENT AS REQUIRED AND WILL PREWIRE ELECTRICAL COMPONENTS IN COUNTER TO JUNCTION BOXES IN COUNTER BASE FOR FINAL CONNECTION BY ELECTRICAL TRADES. INTERCONNECTIONS BETWEEN SECTIONS OF FABRICATED COUNTERS BY FSEC.

C. WIRE THRU TIME DELAY RELAY, SOLENOID VALVE AND CONTROL PANEL TO DISPOSER.

D. ALL REFRIGERATION SYSTEMS ARE LOCATED APPROXIMATELY WHERE SHOWN ON THE PLAN UNLESS OTHERWISE NOTED. THE FOLLOWING ITEMS ARE NOT BY THE FSEC: ROOF CURBS/CONCRETE PADS; SLEEVED & SEALED PENETRATIONS IN ROOFS/FLOORS/CEILINGS/WALLS. VERIFY EXACT LOCATON WITH ARCHITECT/ENGINEER.

I. ELECTRICAL TRADES TO WIRE AUTOMATIC CONTROLS OR INTERLOCK DEVICE BETWEEN EQUIPMENT AND EXHAUST FAN SO EXHAUST FAN TURNS ON ONCE EQUIPMENT IS OPERATIONAL.

J. ELECTRICAL TRADES TO INTERWIRE FIRE PROTECTION SYSTEM WITH BUILDING ALARM SYSTEM AND TO MAKE-UP AIR FAN SHUT-OFF.

K. FIRE PROTECTION SYSTEM REQUIRES 24 HOUR, EMERGENCY SEPARATE ELECTRICAL SERVICE. ELECTRICAL TRADES TO INTERWIRE FIRE PROTECTION SYSTEM WITH ELECTRICAL GAS SHUT-OFF VALVE FOR ALL COOKING EQUIPMENT BELOW HOODS. ELECTRICAL TRADES TO ALSO INTERWIRE FIRE PROTECTION SYSTEM WITH BUILDING ALARM SYSTEM.

L. ELECTRICAL TRADES TO INTERWIRE FIRE PROTECTION SYSTEM TO POWER SHUT-OFF DEVICE, SUPPLIED BY ELECTRICAL TRADES, SO THAT POWER TO ALL ELECTRIC COOKING EQUIPMENT AND CONVENIENCE RECEPTACLES BELOW HOODS IS SHUT OFF UPON ACTIVATION OF THE FIRE PROTECTION SYSTEM.

W. INTERCONNECT THIS EQUIPMENT WITH BUILDING EMERGENCY POWER.

Y. WHEN A UTILITY DISTRIBUTION SYSTEM IS SPECIFIED, ELECTRICAL TRADES SHALL:
1.INSTALL MAIN SERVICE FEEDERS AND OVERCURRENT PROTECTION DEVICES; INSTALL ELECTRICAL CONDUIT AND WIRING FROM ROUGH-IN LOCATION TO RACEWAY TERMINALS IN VERTICAL CHASE BY SYSTEM MANUFACTURER.
2.CONNECT UL LISTED POWER SUPPLY CORDS AND PREWIRED FLEXIBLE CONDUIT SET, ALL PROVIDED BY SYSTEM MANUFACTURER WITH APPROPRIATE EQUIPMENT ITEMS.
3.INTERCONNECT FIRE PROTECTION SYSTEM MICROSWITCH OR RELAY TO POWER SHUT-OFF DEVICE FOR MAIN SERVICE FEEDERS.
4.PROVIDE 24 VOLT POWER SUPPLY CIRCUIT FROM CONTROL BOX IN RISER TO AUTOMATIC STEAM SHUT-OFF VALVE, SEE DETAIL.
5.SPECIAL NOTE – NO MODIFICATION OF ANY MANUFACTURED RACEWAY SHALL BE UNDERTAKEN BY ANY ENTITY WITHOUT THE EXPRESS, WRITTEN APPROVAL AND/OR SUPERVISION OF THE RACEWAY MANUFACTURER.

THE FSEC WILL:

1.INTERCONNECT FIELD JOINTS BY BOLTING BUSBAR AND/OR WIRING TOGETHER. ALL FITTINGS, BOLTS, ETC. SHALL BE PRE-FITTED AND FURNISHED BY THE SYSTEM MANUFACTURER. THE CONTROL WIRE FIELD JOINT WILL BE PROVIDED WITH A QUICK-DISCONNECT DEVICE.

2.INSPECT FOR LOOSE CONNECTIONS CAUSED BY SHIPPING AND TIGHTEN AS REQUIRED.

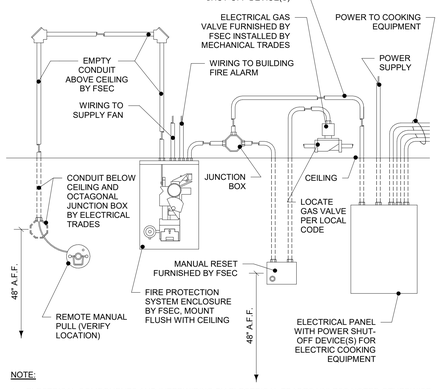

NOTE:

1. ELECTRICAL COMPONENTS AND INTERWIRING BY ELECTRICAL TRADES UNLESS NOTED OTHERWISE.
2. CONDUIT CONCEALED IN WALL WHEREVER POSSIBLE. EXPOSED CONDUIT TO BE CHROME-PLATED.

WET CHEMICAL FIRE PROTECTION SYSTEM

WIRING DIAGRAM - ELECTRIC GAS VALVE

ROBERT RIPPE & ASSOCIATES, INC. © 2011 ROBERT RIPPE

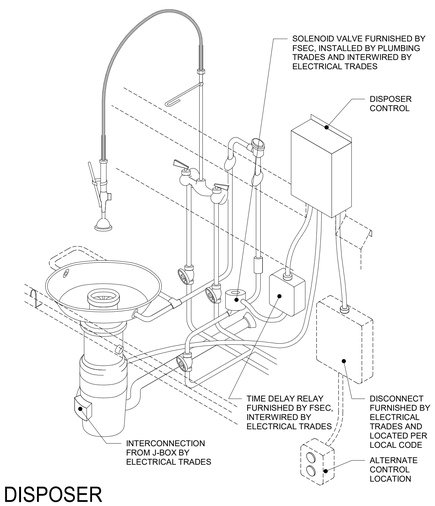

DISPOSER

WITH TIME DELAY RELAY

ROBERT RIPPE & ASSOCIATES, INC. © 2011 ROBERT RIPPE

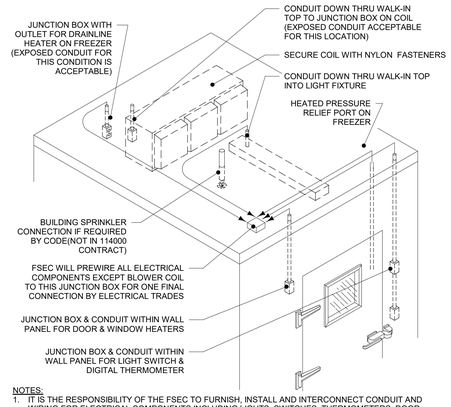

NOTES:

1. IT IS THE RESPONSIBILITY OF THE FSEC TO FURNISH, INSTALL AND INTERCONNECT CONDUIT AND WIRING FOR ELECTRICAL COMPONENTS INCLUDING LIGHTS, SWITCHES, THERMOMETERS, DOOR, WINDOW, PRESSURE RELIEF PORT HEATERS AND RECEPTACLE FOR DRAINLINE HEATER TO EASILY ACCESSIBLE JUNCTION BOX ON TOP OF WALK-IN FOR FINAL CONNECTION BY ELECTRICAL TRADES
2. ALL INTERCONNECTING CONDUIT RUN ABOVE WALK-IN PANELS OR WITHIN WALL PANELS. EXPOSED CONDUIT INSIDE WALK-IN WILL NOT BE ACCEPTABLE EXCEPT FOR THE CONNECTIONS SHOWN AND NOTED IN THE ABOVE ILLUSTRATION.
3. SEAL PENETRATIONS THROUGH CEILING, WALLS AND INSIDE ELECTRICAL CONDUIT OUTSIDE AND INSIDE WALK-IN WITH DOW CORNING #999A SILICONE SEALANT.
4. PROVIDE HOLES FOR SPRINKLER HEAD (IF REQUIRED) AND ELECTRICAL CONDUIT.
5. PROVIDE 1/2" OD PVC CONDUIT AT ALL PENETRATIONS THRU INSULATED PANELS

WALK-IN REFRIGERATOR/FREEZER SD-191

ROBERT RIPPE & ASSOCIATES, INC. © 2011 ROBERT RIPPE

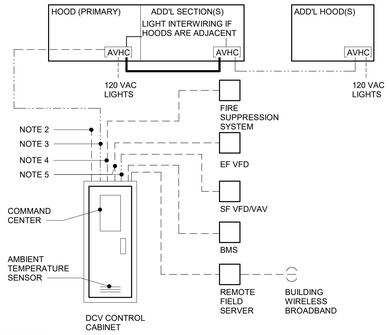

WIRING NOTES:

1. ALL WIRING OF ELECTRICAL EQUIPMENT MUST BE DONE TO MEET NEC AND LOCAL CODES.
2. (2) WIRES AND GROUND FROM DCV CONTROL CABINET TO NON-INTERRUPTIBLE SUPPLY VOLTAGE SERVICE BY ELECTRICAL CONTRACTOR.
3. (1) CAT 5 CABLE FROM DCV CONTROL CABINET TO THE PRIMARY HOOD AVHC BY ELECTRICAL CONTRACTOR.
4. (2) WIRES FROM DCV CONTROL CABINET TO FIRE SUPPRESSION SYSTEM MICRO SWITCHES BY ELECTRICAL CONTRACTOR.
5. (6) WIRE LOW VOLTAGE CABLE FROM DCV CONTROL CABINET TO EACH VFD BY ELECTRICAL CONTRACTOR.

LEGEND

- FIELD WIRING BY E.C.
- WIRING BY GAYLORD
- CAT 5 FIELD WIRING BY E.C.
- CAT 5 FIELD WIRING BY GAYLORD

GAYLORD DCV SYSTEM

ELECTRICAL WIRING DETAIL

ROBERT RIPPE & ASSOCIATES, INC. © 2011 ROBERT RIPPE

ELECTRICAL LEGEND

DR	DUPLEX RECEPTACLE
SR	SINGLE RECEPTACLE
FR	FLOOR RECEPTACLE
SW	SWITCH
V	VOLTS
AMP	AMPERES
PH	PHASE
W	WATTS
KW	KILOWATT
HP	HORSEPOWER
JB	JUNCTION BOX
	EMPTY JUNCTION BOX
+	DISTANCE ABOVE FINISHED FLOOR
DN+	BRING SERVICE DOWN FROM ABOVE
	CEILING TO A DISTANCE ABOVE FINISHED FLOOR
COMP	COMPRESSOR
	MOTOR
	SOLENOID
	DATA OUTLET
	VOICE OUTLET
AFF	ABOVE FINISHED FLOOR
CLG	CEILING
DFA	DOWN FROM ABOVE
ET	ELECTRICAL TRADES
ELEC	ELECTRICAL
FSEC	FOODSERVICE EQUIPMENT CONTRACTOR

Farnsworth GROUP
14225 UNIVERSITY AVENUE, SUITE 110
WALKEE, IOWA 50263
(515) 225-3469 / info@f-w.com
www.f-w.com
Engineers | Architects | Surveyors | Scientists

RIPPE ASSOCIATES
FOODSERVICE DESIGN + CONSULTING

kpff

IMEG

Bishop Engineering

ISSUE:

#	DATE:	DESCRIPTION:
1.0	02/22/2024	ADDENDUM 1.0

BID SET

PROJECT:

STATE OF IOWA DEPARTMENT OF CORRECTIONS

CLARINDA CORRECTIONAL FACILITY - KITCHEN & LAUNDRY ADDITION

2000 N 16TH ST, CLARINDA, IA 51632

DATE:	02/09/2024
DESIGNED:	EG/TP
DRAWN:	MM
REVIEWED:	EG/RB

SHEET TITLE:

FOODSERVICE EQUIPMENT ELECTRICAL SCHEDULE & DETAILS

SHEET NUMBER:

FSE100

PROJECT NO.: 0240202.00
RFB922300-02

2/20/2024 4:54:59 AM

FOODSERVICE EQUIPMENT MECHANICAL SCHEDULE

ITEM #	DESCRIPTION		DIRECT WASTE SIZE	DIRECT WASTE HEIGHT	INDIRECT WASTE SIZE	COLD WATER SIZE	COLD WATER HEIGHT	HOT WATER SIZE	HOT WATER HEIGHT	GAS SIZE	GAS HEIGHT	GAS INPUT MBTU/HR	W.C.	REMARKS
8A	RACKED REFRIGERATION SYSTEM	A												NOTE M
8B	REFRIGERATION SYSTEM COIL - PRODUCE REFRIGERATOR	B			1"									NOTE G
8C	REFRIGERATION SYSTEM COIL - MEAT & DAIRY REFRIGERATOR	C			1"									NOTE G
8D	REFRIGERATION SYSTEM COIL - TEMPERING REFRIGERATOR	D			1"									NOTE G
8E	FREEZER SYSTEM COIL - MAIN FREEZER	E			1"									NOTE G
8F	FREEZER SYSTEM COIL - BAKERY FREEZER	F			1"									NOTE G
8G	REFRIGERATION SYSTEM COIL - BAKERY REFRIGERATOR	G			1"									NOTE G
18	HAND SINK		1 1/2"	22"		1/2"	24"	1/2"	24"					
20	FLOOR TROUGH		4"	-4"										FURNISHED BY FSEC / INSTALLED BY MECH TRADES
22	WORKCOUNTER W/SINK				2"	1/2"	22"	1/2"	22"					(1) CW & HW CONNECTION / (1) INDIRECT WASTE CONNECTION
62	WORKCOUNTER W/SINK				2"	1/2"	22"	1/2"	22"					(1) CW & HW CONNECTION / (1) INDIRECT WASTE CONNECTION
64	WATER METER W/TEMPERATURE RANGE					1/2"	72"	1/2"	72"					NOTE D / TREATED CW FROM BLDG RO SYSTEM / ADD ALTERNATE / MECHANICAL TRADES TO ROUGH IN AND CAP AS NEEDED
68	HAND SINK		1 1/2"	22"		1/2"	24"	1/2"	24"					
74	ROLL-IN PROOFER, 2 DOUBLE RACKS				3/4"	1/2"	90"							NOTE D & E / TREATED CW BLDG RO SYSTEM / ADD ALTERNATE / MECHANICAL TRADES TO ROUGH IN AND CAP AS NEEDED
75	FLOOR TROUGH		4"	-4"										FURNISHED BY FSEC / INSTALLED BY MECH TRADES
85	ROLL-IN BLAST CHILLER	A			1 1/2"									
87	RACK OVEN, 2-SEC.				3/4"	1/2"	100"			1"	90"	290	5.0"	NOTE D, E, H, I, J, V & W / TREATED CW FROM BLDG RO SYSTEM / 40 PSI MIN @ 9 GPM / WATER HARDNESS 2-4 GPG / ADD ALTERNATE / MECHANICAL TRADES TO ROUGH-IN AND CAP AS NEEDED
89	FIRE PROTECTION SYSTEM	A												NOTE J / SEE DETAIL / TO SERVE ITEM (1) #87
90	FIRE PROTECTION SYSTEM	A												NOTE J / SEE DETAIL / TO SERVE ITEM (1) #87
91	ICE MAKER				1/2"	3/8"	54"							NOTE D / TREATED CW FROM BLDG RO SYSTEM
92	ICE BIN				3/4"									
93	FLOOR TROUGH		4"	-4"										FURNISHED BY FSEC / INSTALLED BY MECH TRADES
100	HAND SINK		1 1/2"	22"		1/2"	24"	1/2"	24"					
104	WORKCOUNTER W/SINKS				2"	1/2"	22"	1/2"	22"					(2) CW & HW CONNECTIONS / (3) DIRECT WASTE CONNECTIONS
107	SPRAY RINSE					3/4"	20"	1/2"	20"					
117	FLOOR TROUGH		4"	-4"										FURNISHED BY FSEC / INSTALLED BY MECH TRADES
118	HOSE STATION					1/2"	48"	1/2"	48"					
132	STACKED WASHER/DRYER	A			1 1/4"	3/4"	48"	3/4"	48"	3/8"	30"	22	5.0"	NOTE I, V & W / DRAIN TO STANDPIPE IN WALL
145	WORKCOUNTER W/SINKS					1/2"	10"	1/2"	10"					(2) CW & HW CONNECTIONS / (2) INDIRECT WASTE CONNECTIONS
146	WORKCOUNTER W/SINKS				2"	1/2"	10"	1/2"	10"					(2) CW & HW CONNECTIONS / (2) INDIRECT WASTE CONNECTIONS
150	UTILITY DISTRIBUTION SYSTEM					1"	110"	1"	110"	3"	110"	1260	7.0"	DFA / NOTE S / 3/4" FILTERED CW FROM BUILDING RO SYSTEM
151	FIRE PROTECTION SYSTEM	A												NOTE J / SEE DETAIL / TO SERVE ITEM #148
154	60 GALLON KETTLE					1/2"	24"	1/2"	24"	3/4"	30"	190	4.0"	NOTE I, J, V & W
155	80 GALLON KETTLE					1/2"	24"	1/2"	24"	3/4"	30"	190	4.0"	NOTE I, J, V & W
156	FLOOR TROUGH		4"	-4"										FURNISHED BY FSEC / INSTALLED BY MECH TRADES
158	STEAMER, 2-SEC.	A			1 1/2"	3/4"	24"			3/4"	30"	125	4.0"	NOTE D, E, H, I, J, V & W / (1) TREATED CW CONNECTION FROM BLDG RO SYSTEM @ 35-60 PSI / ADD ALTERNATE / MECHANICAL TRADES TO ROUGH-IN AND CAP AS NEEDED
158	STEAMER, 2 SEC.	B				3/4"	24"							NOTE D / (1) UNFILTERED CW CONNECTION @ 35-60 PSI / ADD ALTERNATE / MECHANICAL TRADES TO ROUGH-IN AND CAP AS NEEDED
160	STEAMER, 2-SEC.	A			1 1/2"	3/4"	24"			3/4"	30"	125	4.0"	NOTE D, E, H, I, J, V & W / (1) TREATED CW CONNECTION FROM BLDG RO SYSTEM @ 20-60 PSI / ADD ALTERNATE / MECHANICAL TRADES TO ROUGH-IN AND CAP AS NEEDED
160	STEAMER, 2 SEC.	B				3/4"	24"							NOTE D / (1) UNFILTERED CW CONNECTION @ 20-60 PSI / ADD ALTERNATE / MECHANICAL TRADES TO ROUGH-IN AND CAP AS NEEDED
161	STEAMER, 2-SEC.	A			1 1/2"	3/4"	24"			3/4"	30"	125	4.0"	NOTE D, E, H, I, J, V & W / (1) TREATED CW CONNECTION FROM BLDG RO SYSTEM @ 35-60 PSI
161	STEAMER, 2 SEC.	B				3/4"	24"							NOTE D / (1) UNFILTERED CW CONNECTION @ 35-60 PSI
162	HOSE REEL					1/2"	44"	1/2"	44"					NOTE D / SEE DETAIL
163	RACK OVEN, 2-SEC.				3/4"	1/2"	100"			1"	102"	290	5.0"	NOTE D, E, H, I, J, V, & W / TREATED CW FROM BLDG RO SYSTEM / 40 PSI MIN @ 9 GPM / WATER HARDNESS 2-4 GPG
169	FIRE PROTECTION SYSTEM	A												NOTE J / SEE DETAIL / TO SERVE ITEM (1) #163
170	FIRE PROTECTION SYSTEM	A												NOTE J / SEE DETAIL / TO SERVE ITEM (1) #163
173	POT & PAN SINK		2"	10"		3/4"	18"	3/4"	18"					NOTE Y / (2) CW & HW CONNECTIONS / (3) DIRECT WASTE CONNECTIONS
174	DISPOSER		2"	10"										NOTE A & B / SEE DETAIL / TEE-OFF 1/2" CW FROM #175
175	SPRAY RINSE					3/4"	20"	1/2"	20"					BRANCH 1/2" CW TO ITEM #174
182	HOSE STATION					3/4"	12"							HOSE BIB W/ 2.1 GPM MIN. @ 30 PSI MIN. / 120°F INCOMING HW
183	FLOOR TROUGH		4"	-4"										FURNISHED BY FSEC / INSTALLED BY MECH TRADES
184	HOSE REEL					1/2"	44"	1/2"	44"					NOTE D / SEE DETAIL
185	EYE/FACE WASH STATION		2"	24"		1/2"	29"	1/2"	29"					MIXING VALVE FURNISHED BY FSEC / INSTALLED BY MECH TRADES
187	DISPOSER		2"	10"										NOTES A & B / SEE DETAIL / TEE-OFF 1/2" CW FROM #191
189	FLIGHT-TYPE DISHMACHINE W/DRYER	A			2"	3/4"	6"	1"	6"					NOTE F & Q
189	FLIGHT-TYPE DISHMACHINE W/DRYER	B			2"									UNLOAD END
191	SPRAY RINSE					3/4"	20"	1/2"	20"					BRANCH 1/2" CW TO ITEM #187
192	FLOOR TROUGH		4"	-4"										FURNISHED BY FSEC / INSTALLED BY MECH TRADES
194	FLOOR TROUGH		4"	-4"										FURNISHED BY FSEC / INSTALLED BY MECH TRADES

FOODSERVICE EQUIPMENT EXHAUST SCHEDULE

ITEM #	DESCRIPTION		VOLUME	VENT DEPTH	VENT WIDTH	VENT DIAMETER	STATIC PRESSURE	RI HEIGHT	FAN #	FIRE PROTECTION ITEM #	DVC ITEM #	REMARKS
87	RACK OVEN, 2-SEC.		800 CFM			8"	0.300	104"		89	N/A	NOTE X & Z / DIRECTLY VENTED
87	RACK OVEN, 2-SEC.		800 CFM			8"	0.300	104"		90	N/A	NOTE X & Z / DIRECTLY VENTED
132	STACKED WASHER/DRYER		220 CFM			4"		48"		N/A	N/A	
148	EXHAUST HOOD	L1	1422 CFM	12"	12"		1.105	116"	1	151	153	
148	EXHAUST HOOD	L1	1777 CFM	12"	15"		1.170	116"	1	151	153	
148	EXHAUST HOOD	L1	1777 CFM	12"	15"		1.170	116"	1	151	153	
148	EXHAUST HOOD	R1	1422 CFM	12"	12"		1.105	116"	1	151	153	
148	EXHAUST HOOD	R1	1777 CFM	12"	15"		1.170	116"	1	151	153	
148	EXHAUST HOOD	R1	1777 CFM	12"	15"		1.170	116"	1	151	153	
163	RACK OVEN, 2-SEC.		800 CFM			8"	0.300	104"		169	N/A	NOTE Z / DIRECTLY VENTED
163	RACK OVEN, 2-SEC.		800 CFM			8"	0.300	104"		170	N/A	NOTE Z / DIRECTLY VENTED
190	EXHAUST DUCT RISER		300 CFM	31 1/2"	4"		0.250	132"	2	N/A	N/A	CAPTURES LOAD END OF DISHMACHINE
195	CONDENSATE HOOD		2400 CFM	20"	12"		0.250	106 1/2"	2	N/A	N/A	CAPTURES UNLOAD END OF DISHMACHINE

FOODSERVICE EQUIPMENT DISHMACHINE SCHEDULE

ITEM #	DESCRIPTION	GPH	APPROX. HOUR	LATENT HEAT	SENSIBLE HEAT
189	FLIGHT-TYPE DISHMACHINE W/DRYER	58	6	85000	36400

MECHANICAL LEGEND

CW	COLD WATER
HW	HOT WATER
W	DIRECT WASTE
AGW	AIR GAP WASTE
IW	INDIRECT WASTE
FD	FLOOR DRAIN
FS	FLOOR SINK
FSH	FLOOR SINK w/HALF GRATE
TTFD	TELL-TALE FLOOR DRAIN
S	STEAM
CR	CONDENSATE RETURN
G	GAS
CWR	COOLING TOWER / CHILLED WATER SUPPLY/RETURN
A	COMPRESSED AIR
	CO2
	EXHAUST
	SUPPLY
AFF	ABOVE FINISHED FLOOR
CLG	CEILING
DFA	DOWN FROM ABOVE
FSEC	FOODSERVICE EQUIPMENT CONTRACTOR
OOW	OUT OF WALL
MT	MECHANICAL TRADES
PLBG	PLUMBING
WC	WATER COLUMN

GENERAL NOTES - MECHANICAL

NOTE: GENERAL NOTES REFER TO GENERAL CONDITIONS. ALL CONDITIONS MAY NOT EXIST ON THIS PROJECT.

1. THESE DRAWINGS ARE FOR USE BY THE PROJECT ENGINEERS IN PREPARING THEIR DRAWINGS. THESE DRAWINGS ARE INCIDENTAL TO OUR SERVICES AND MUST BE REVIEWED AND APPROVED BY A PROPERLY LICENSED DESIGN PROFESSIONAL BEFORE BEING USED FOR ANY OTHER PURPOSES. RIPPE ASSOCIATES IS NOT LICENSED AS A DESIGN PROFESSIONAL AND DOES NOT HOLD ITSELF OUT AS SUCH.
2. SERVICES SHOWN ON THIS PLAN ARE EQUIPMENT REQUIREMENTS FOR FOODSERVICE EQUIPMENT ONLY. LOCATIONS, SIZES AND HEIGHTS ABOVE FINISHED FLOOR ARE APPROXIMATELY AS REQUIRED BY EQUIPMENT TO BE FURNISHED. SINCE MULTIPLE SOURCES FOR THE EQUIPMENT MAY BE SPECIFIED, SLIGHT VARIATIONS IN UTILITY LOADS AND CONNECTION SIZES CAN OCCUR. DESIGN BUILDING UTILITY SYSTEM ACCORDINGLY AND ADD NOTES TO THE MECHANICAL CONTRACT DOCUMENTS INDICATING SLIGHT VARIATIONS ARE TO BE INCLUDED IN THE MECHANICAL TRADES WORK AT NO ADDITIONAL COST.
3. THESE DRAWINGS ARE NOT TO BE USED TO ROUGH-IN UTILITIES AND/OR LOCATE SLEEVES, SINCE REQUIRED ALLOWANCES MUST BE MADE FOR MULTIPLE EQUIPMENT SOURCES AND FOR VALVES, TRAPS, FITTINGS, DISCONNECTS, ETC. WHICH WILL BE FURNISHED UNDER MECHANICAL TRADES. FSEC IS RESPONSIBLE FOR PREPARING DIMENSIONED ROUGH-IN AND SLEEVE LOCATION PLAN PER SPECIFICATIONS TO ACCOMMODATE THE EXACT EQUIPMENT BEING PROVIDED.
4. MECHANICAL TRADES TO PROVIDE ALL NECESSARY SHUT-OFF VALVES, PRESSURE REGULATORS, INDIVIDUAL EQUIPMENT SUPPLY STOPS, ETC. REQUIRED UPSTREAM OF THE FINAL SUPPLY CONNECTION(S) TO FOODSERVICE EQUIPMENT UNLESS NOTED OTHERWISE.
5. ALL INDIRECT WASTES FOR FOODSERVICE EQUIPMENT WILL BE EXTENDED TO FLOOR DRAINS BY MECHANICAL TRADES, EXCEPT FOR THE WALK-IN REFRIGERATOR/FREEZER BLOWER COIL DRAINLINES AND DRAINLINES WITHIN THE CUSTOM FABRICATED COUNTERS WHICH WILL BE EXTENDED TO FLOOR DRAINS BY THE FSEC.
6. THE FSEC IS RESPONSIBLE FOR SETTING EQUIPMENT IN PLACE. FINAL CONNECTIONS AND INTERCONNECTIONS FOR THIS EQUIPMENT ARE THE RESPONSIBILITY OF THE MECHANICAL TRADES.
7. TRADE CONTRACTORS TO PROVIDE HOLES, SLEEVES THROUGH CEILING, ROOFS, AND WALLS FOR BEVERAGE, OIL, COMPRESSED AIR, ICE, SLURRY AND REFRIGERATION LINES. SEAL THEM IN ACCORDANCE WITH LOCAL FIRE, BUILDING CODES AND IN ACCORDANCE WITH SIZES SPECIFIED. TRADE CONTRACTORS TO PROVIDE ALL DUCT FIRE SEPARATIONS, ENCLOSURES, WRAPPINGS, ETC., AS MAY BE REQUIRED BY LOCAL BUILDING AND FIRE CODES. HOLES IN FOODSERVICE EQUIPMENT FOR MECHANICAL SERVICES PROVIDED BY FSEC.
8. SINK FAUCETS FURNISHED LOOSE BY FSEC FOR INSTALLATION BY MECHANICAL TRADES. SINK ROTARY DRAIN & OVERFLOW FURNISHED AND INSTALLED BY FSEC; TAILPIECE, P-TRAP, ESCUTCHEON PLATES AND DRAIN CONNECTION FURNISHED AND INSTALLED BY MECHANICAL TRADES EXCEPT FOR TAILPIECE AND P-TRAP FOR WALL MOUNTED HANDSINKS WHICH ARE PROVIDED BY FSEC AND INSTALLED BY MECHANICAL TRADES.
9. HEALTH CODES REQUIRE THAT ALL PLUMBING BE ENCLOSED IN WALLS OR FLOOR AND THAT EXPOSED PIPING RUNS BE AS SHORT AS POSSIBLE. GAS PIPING TO BE SLEEVED AND VENTED PER CODE SO IT IS CONCEALED WITHIN THE WALL. EXPOSED HORIZONTAL PIPING MUST BE 6" ABOVE THE FLOOR AND AT LEAST 1" OFF THE WALL. ANY EXPOSED UNINSULATED STEAM PIPING/FITTINGS AND HAND SINK PIPING (BOTH DRAIN AND SUPPLY LINES) ARE TO BE CHROME PLATED.
10. SIZE EXHAUST AND SUPPLY FAN CAPACITY FOR 125% OF AIR VOLUMES INDICATED. THE CFM LISTED IN THE SCHEDULE IS THE DESIGN MINIMUM AND THE TEST & BALANCE REPORT MUST BE EQUAL TO OR GREATER THAN THE LISTED CFM.
11. ON EXHAUST HOODS SHOWN OVER COOKING EQUIPMENT, INCLUDING EQUIPMENT WITH INTEGRAL HOODS THAT ARE TYPE I HOODS, PROVIDE APPROPRIATE FIRE-RATED HOOD/DUCT ENCLOSURE ABOVE CEILING. VERIFY WITH LOCAL CODE AUTHORITIES WHETHER FIRE-RATED ENCLOSURE IS REQUIRED AT PORTION OF EXHAUST HOOD THAT EXTENDS ABOVE THE CEILING. IF ENCLOSURE IS NEEDED, ADVISE CONSULTANT AS TO FINAL ENCLOSURE DETAIL AT HOOD.
12. ALL HOSE BIBBS BY MECHANICAL TRADES TO HAVE HOT WATER AND COLD WATER MIXING VALVE.
13. ENGINEERS TO VERIFY WITH LOCAL CODE AUTHORITIES IF USE OF A GREASE INTERCEPTOR IS REQUIRED. IF REQUIRED RUN DRAINLINES THRU GREASE INTERCEPTOR AS REQUIRED BY CODE. CENTRAL GREASE TRAP TO BE LOCATED OUTSIDE OF FOODSERVICE AREA. POINT OF USE GREASE TRAP TO BE FLUSH W/FLOOR & LOCATION TO BE COORDINATED WITH FOODSERVICE CONSULTANT.
14. BENEATH ALL EXHAUST HOODS, INSTALL ALL EXPOSED PIPING AS CLOSE TO WALL AS POSSIBLE, USING 90 DEGREE ELBOWS AS NEEDED SO COOKING EQUIPMENT MAY BE PUSHED BACK FROM FRONT EDGE OF HOOD FOR PROPER CAPTURE.
15. TO MINIMIZE CROSS DRAFTS THAT WOULD AFFECT HOOD CAPTURE, EFFECTIVE INTRODUCTION OF REPLACEMNT AIR (WHETHER SUPPLIED THROUGH DISPLACEMENT VENTILATION DIFFUSERS, PERFORATED DIFFUSERS LOCATED IN THE CEILING, AND/OR TRANSFER AIR FROM ADJACENT SPACES) SHOULD BE DESIGNED TO LIMIT VELOCITIES APPROACHING THE HOOD TO LESS THAN 75 FPM.
16. FOODSERVICE EQUIPMENT WATER PRESSURE REQUIREMENTS, UNLESS NOTED OTHERWISE, IS 40-70 PSI. MECHANICAL TRADES TO PROVIDE PRV'S AS REQUIRED TO ACHIEVE PRESSURE AS NOTED.
17. RECOMMENDED HOT WATER TEMPERATURES FOR SINKS SHOULD BE AS FOLLOWS: POT & PAN SINKS SET AT 120° F MAXIMUM, HAND SINKS SET AT 110° F MAXIMUM AND ALL OTHER SINKS SET AT 110-120° F MAXIMUM. HOT WATER TEMPERATURES MUST CONFORM TO CODE REQUIREMENTS.
18. TO MAXIMIZE EXHAUST HOOD CAPTURE & PROPER AIR VOLUME BALANCING, WE DO NOT RECOMMEND HAVING MORE THAN TWO DUCT COLLARS ON ONE FAN W/OUT THE USE OF A UL LISTED BALANCING DAMPER/BAFFLE AT EACH DUCT COLLAR. THE LISTED DAMPER REQUIRES AT LEAST 8" OF ADDITIONAL VERTICAL CLEARANCE DEPENDING ON THE MANUFACTURE & APPROVAL FROM THE LOCAL AUTHORITY HAVING JURISDICTION. PLEASE ADVISE CONSULTANT IF THE DAMPER NEEDS TO BE SPECIFIED.
19. UTILITY CONNECTIONS SHOWN ARE THOSE REQUIRED TO SERVICE FOOD SERVICE EQUIPMENT ONLY. MECHANICAL TRADES SHOULD VERIFY WITH OWNER WHETHER ADDITIONAL UTILITIES ARE REQUIRED FOR EXISTING, FUTURE OR VENDOR FURNISHED NON-FOODSERVICE EQUIPMENT LOCATED WITHIN THE AREA SHOWN ON THIS PLAN.
20. FLOOR SINKS IN FOODSERVICE AREAS TO BE ACID RESISTANT, PORCELAIN ENAMEL-COATED BOWL AND SPLASH RESISTANT GRATE REMOVABLE WITHOUT TOOLS. BASKET STRAINER TO BE REMOVABLE IN OPENING LESS THAN 6" IN HEIGHT.

SCHEDULE NOTES - MECHANICAL

NOTE: SCHEDULE NOTES PERTAIN TO INDIVIDUAL ITEMS AS INDICATED IN THE MECHANICAL SPOT CONNECTION SCHEDULE.

A. MECHANICAL TRADES TO INSTALL BACKFLOW PREVENTION DEVICE SUPPLIED BY FSEC.

B. BRANCH CW FROM SPRAY RINSE OR FAUCET THRU SOLENOID VALVE AND VACUUM BREAKER, CONNECT TO DISPOSER THROAT, BOWL OR DISPOSER TROUGH AS SHOWN. SEE DETAIL.

D. MECHANICAL TRADES TO PROVIDE A CODE APPROVED BACKFLOW PREVENTION DEVICE FOR THIS ITEM.

E. THIS ITEM HAS SPECIAL WATER QUALITY REQUIREMENTS. VERIFY PARTS PER MILLION COUNT (PPM) OF TOTAL DISSOLVED SOLIDS IN THE WATER. IF IT IS 30 PPM OR HIGHER, MECHANICAL TRADES TO PROVIDE CONDITIONED WATER.

F. IF WATER EXCEEDS 3 GRAINS OF HARDNESS, THE DISHMACHINE MANUFACTURER RECOMMENDS SOFTENED WATER BE PROVIDED TO THE DISHMACHINE AND BOOSTER HEATER. SEE FOODSERVICE EQUIPMENT DISHMACHINE SCHEDULE FOR THE APPROXIMATE HOURS OF OPERATION AND AMOUNT OF WATER USED PER HOUR.

G. INDIRECT WASTE FOR THIS ITEM EXTENDED TO FLOOR DRAIN/SINK BY FSEC.

H. PROVIDE CAST IRON OR STAINLESS STEEL WASTE PIPING TO ACCOMMODATE ACCIDENTAL DISCHARGE OF EXCESSIVELY HOT WATER

I. THE FSEC WILL PROVIDE A QUICK-DISCONNECT FLEXIBLE HOSE WITH THIS PIECE OF EQUIPMENT FOR INSTALLATION BY MECHANICAL TRADES. SEE DETAIL.

J. THE FSEC WILL PROVIDE A MECHANICALLY OPERATED GAS SHUT-OFF VALVE FOR INSTALLATION BY MECHANICAL TRADES. FSEC TO INTERCONNECT TO FIRE PROTECTION SYSTEM FOR FUEL SHUT-OFF TO COOKING EQUIPMENT BENEATH EXHAUST HOODS UPON ACTIVATION OF FIRE PROTECTION SYSTEM.

M. ALL REFRIGERATION SYSTEMS ARE LOCATED APPROXIMATELY WHERE SHOWN ON THE PLAN UNLESS OTHERWISE NOTED. THE FOLLOWING ITEMS ARE NOT BY THE FSEC: ROOF CURBS/CONCRETE PADS; SLEEVED & SEALED PENETRATIONS IN ROOFS/FLOORS/CEILINGS/WALLS. VERIFY EXACT LOCATON WITH ARCHITECT/ENGINEER.

Q. SEE FOODSERVICE EQUIPMENT DISHMACHINE SCHEDULE FOR THE SENSIBLE AND LATENT HEAT DISSIPATION FROM THE DISHMACHINE. VENTILATE THE DISHROOM ACCORDINGLY. THESE VALUES ARE TO CALCULATE VENTILATION REQUIRED IN ADDITION TO EXHAUST LISTED IN SCHEDULE. THIS HEAT IS ADDITIONAL HEAT NOT EXHAUSTED THRU MACHINE VENTS.

S. WHEN A UTILITY DISTRIBUTION SYSTEM IS SPECIFIED, MECHANICAL TRADES SHALL:

1.PROVIDE AND INSTALL WATER, AND STEAM SUPPLY PIPES INSIDE SYSTEM'S VERTICAL CHASES FROM ROUGH-IN LOCATIONS TO RACEWAY PIPING CONNECTION POINTS.

2.INSTALL METAL FLEXIBLE HOSES (PROVIDE WITH UNION) AND RIGID PIPE ASSEMBLIES, ALL FURNISHED BY RACEWAY MANUFACTURER, BETWEEN APPROPRIATE EQUIPMENT AND RACEWAY.

3.PROVIDE AND INSTALL BRASS ELLS, NIPPLES, AND REDUCING FITTINGS NECESSARY TO PRESENT A NEAT APPEARANCE AND TO PREVENT FLEXIBLE HOSES FROM TOUCHING THE FLOOR.

4.INSTALL VACUUM BREAKER, AIR GAP ASSEMBLY, AND DRAINLINE FURNISHED BY SYSTEM MANUFACTURER BETWEEN EXHAUST HOOD OUTLET AND AIR GAP DRAIN AT FLOOR; FITTINGS AS REQUIRED BY PLUMBING CONTRACTOR.

5.SPECIAL NOTE – NO MODIFICATION OF ANY MANUFACTURED RACEWAY SHALL BE UNDERTAKEN BY ANY ENTITY WITHOUT THE EXPRESS, WRITTEN APPROVAL AND/OR SUPERVISION OF THE RACEWAY MANUFACTURER.

THE FSEC WILL:

1.INTERCONNECT PLUMBING AND FIELD JOINTS BY TIGHTENING UNIONS: UNIONS PRE-FITTED AND SUPPLIED BY RACEWAY MANUFACTURER. EACH FIELD JOINT WILL CONSIST OF ONE UNION FOR EACH SERVICE.

2.TEST INTERNAL PIPING SYSTEM FOR LEAKS CAUSED BY SHIPPING AND TIGHTEN AS REQUIRED.

V. MECHANICAL TRADES TO PROVIDE GAS PRESSURE REGULATORS TO REDUCE NATURAL GAS PRESSURE TO 10" W.C. (PROPANE TO 15" W.C.); GAS PRESSURE REGULATOR FURNISHED WITH EQUIPMENT WILL REDUCE PRESSURE FROM 10" W.C. (OR 15" W.C.) TO REQUIRED PRESSURE.

W. MECHANICAL TRADES TO CONCEAL MAIN GAS PIPING IN CHASE. DO NOT RUN EXPOSED ON FACE OF WALL. MINIMIZE EXPOSED PIPING FOR FINAL CONNECTIONS.

Y. PIPE DRAINLINE SERVING THIS EQUIPMENT IN LINE UPSTREAM FROM TELLTALE FLOOR DRAIN (I.E. FLOOR DRAIN WITHOUT BACKWATER VALVE).

Z. MECHANICAL TRADES TO FURNISH AND INSTALL DEDICATED EXHAUST FAN AND DUCTWORK TO SERVE THIS EQUIPMENT.

Farnsworth GROUP
14225 UNIVERSITY AVENUE, SUITE 110
WALKEE, IOWA 50263
(515) 225-3469 / info@f-w.com
www.f-w.com
Engineers | Architects | Surveyors | Scientists

RIPPE ASSOCIATES
FOODSERVICE DESIGN + CONSULTING

kpff

IMEG

Bishop Engineering

ISSUE:

#	DATE:	DESCRIPTION:
1.0	02/22/2024	ADDENDUM 1.0

BID SET

PROJECT:
STATE OF IOWA DEPARTMENT OF CORRECTIONS

CLARINDA CORRECTIONAL FACILITY - KITCHEN & LAUNDRY ADDITION

2000 N 16TH ST, CLARINDA, IA 51632

DATE:	02/09/2024
DESIGNED:	EG/TP
DRAWN:	MM
REVIEWED:	EG/RB

SHEET TITLE:
FOODSERVICE EQUIPMENT MECHANICAL SCHEDULE

SHEET NUMBER:
FSM100

PROJECT NO.: 0240202.00
RFB922300-02

2/20/2024 9:50:49 AM

SECTION 00 4116

BID FORM

The Bid Form must be submitted online through the State's IMPACS Electronic Procurement System.

RFB 922300-02

BID FORM for CONSTRUCTION CONTRACT
for
Clarinda Correctional Facility (CCF)
2000 N. 16th St., Clarinda, Iowa 51632
Project 9223.00

Iowa Department of Administrative Services
Hoover State Office Building, Level 3
1305 East Walnut Street
Des Moines, Iowa 50319-0105

The following information is to be completed and submitted with your bid..

1. Bid Form - Completed and Signed (to be uploaded with bid submission)
2. Non Discrimination Clause Information
3. Contractor Targeted Small Business Enterprise Pre-Bid Contract Information
4. Bid Security – 5% of total Bid amount (to be uploaded with bid submission)

Authorized Representative:
The undersigned Bidder, in response to your Request for Bid for construction of the above project, having examined the Drawings, Specifications, and other Bidding Documents dated February 09, 2024, and Addenda issued and acknowledged below as received and being familiar with all the conditions surrounding the construction of the proposed project including the availability of materials and labor, hereby proposes to furnish all labor, materials, equipment and supplies to perform all work to construct the project in strict accordance with the proposed Contract Documents, within the time and at the prices stated below. Prices are to cover all expenses incurred in performing the work required under the proposed Contract Documents, of which this bid is a part.

Bidder acknowledges receipt of the following Addenda which are a part of the Bidding Documents and for which any effect on cost of the Work is included in the bid amounts indicated:

Number	_____	_____	_____	_____	_____
Dated	_____	_____	_____	_____	_____

Note that the State of Iowa is exempt from State and Local sales and use taxes (including local option and school option) for this project. Taxes on construction materials shall NOT be included in the bid amounts.

Amounts shall be indicated in both words and figures. In case of discrepancy, the amount indicated in words shall govern.

BID PACKAGES:

Bid Package BP 01

Description: General Construction

Bidder proposes and agrees to perform all work as described in the Construction Documents for the sum of:

_____

_____ Dollars

($_____).

BP 01 Unit Price 01A

Description: Over Excavation and Backfill with Engineered Fill (1 Cubic Yard)

_____

_____ Dollars

($_____).

BP 01 Unit Price 01B

Description: Over Excavation and Backfill with Lean Concrete (1 Cubic Yard)

_____

_____ Dollars

($_____).

BP 01 Alternate NO. 1

Description: Laundry Equipment Opening Surrounds

Bidder proposes and agrees to perform all work as described in the Construction Documents for the sum of:

_____

_____ Dollars

($_____).

Bid Package BP 02

Description: Precast

Bidder proposes and agrees to perform all work as described in the Construction Documents for the sum of:

_____

_____ Dollars

($_____).

Bid Package BP 03

Description: EPDM Roofing/Gutters/Downspouts

Bidder proposes and agrees to perform all work as described in the Construction Documents for the sum of:

_____

_____ Dollars

($_____).

Bid Package BP 04

Description: Food Service

Bidder proposes and agrees to perform all work as described in the Construction Documents for the sum of:

_____

_____ Dollars

($_____).

BP 04 Alternate NO. 2

Description: Alternate Bakery Equipment Supply and Installation

Bidder proposes and agrees to perform all work as described in the Construction Documents for the sum of:

_____

_____ Dollars

($_____).

Addendum #1

BP 04 Alternate NO. 3

Description: Alternate Kitchen Equipment Supply and Installation

Bidder proposes and agrees to perform all work as described in the Construction Documents for the sum of:

_____

_____ Dollars

($_____).

Bid Package BP 05

Description: Fire Suppression

Bidder proposes and agrees to perform all work as described in the Construction Documents for the sum of:

_____

_____ Dollars

($_____).

Bid Package BP 06

Description: Plumbing and HVAC

Bidder proposes and agrees to perform all work as described in the Construction Documents for the sum of:

_____

_____ Dollars

($_____).

BP 06 Alternate NO. 1

Description: Laundry Equipment Mechanical and Plumbing

Bidder proposes and agrees to perform all work as described in the Construction Documents for the sum of:

_____

_____ Dollars

($_____).

BP 06 Alternate NO. 2

Description: Alternate Bakery Mechanical and Plumbing

Bidder proposes and agrees to perform all work as described in the Construction Documents for the sum of:

_____

_____ Dollars

($_____).

BP 06 Alternate NO. 3

Addendum #1

Description: Alternate Kitchen Mechanical and Plumbing

Bidder proposes and agrees to perform all work as described in the Construction Documents for the sum of:

_____

_____ Dollars

($_____).

<u>Bid Package BP 07</u>

Description: Electrical

Bidder proposes and agrees to perform all work as described in the Construction Documents for the sum of:

_____

_____ Dollars

($_____)

BP 07 Alternate 01

Description: Laundry Equipment Electrical

Bidder proposes and agrees to perform all work as described in the Construction Documents for the sum of:

_____

_____ Dollars

($_____).

BP 07 Alternate 02

Description: Alternate Bakery Equipment Electrical

Bidder proposes and agrees to perform all work as described in the Construction Documents for the sum of:

_____

_____ Dollars

($_____).

BP 07 Alternate NO. 3

Addendum #1

Description: Alternate Kitchen Equipment Electrical

Bidder proposes and agrees to perform all work as described in the Construction Documents for the sum of:

_____

_____ Dollars

($_____).

<u>Bid Package BP 08</u>

Description: Civil

Bidder proposes and agrees to perform all work as described in the Construction Documents for the sum of:

_____

_____ Dollars

($_____).

BP 08 Unit Price 08A

Description: Over Excavation and Backfill with Engineered Fill (1 Cubic Yard)

_____

_____ Dollars

($_____).

Bidder hereby certifies that:

1. This bid is genuine and is not made in the interest of or on behalf of any undisclosed person, firm or corporation;
2. Bidder has not directly or indirectly induced or solicited any other bidder to put in a false or sham bid; Bidder has not solicited or induced any person, firm or corporation to refrain from bidding;

and Bidder has not sought by collusion to obtain any advantage over any other bidder or over the Owner.

3. Bidder hereby certifies that the Bidder is registered with the Iowa Labor Commissioner as a Contractor as required by Chapter 91C, Code of Iowa.
4. Bidder agrees to comply with all Federal and State Affirmative Action/Equal Employment Opportunity requirements concerning fair employment and will not discriminate between or among them by reason of race, color, religion, sex, national origin or physical handicap.
5. All construction under this Contract shall conform to the requirements of the *Iowa State Building Code*.
6. Bidder agrees that this bid shall remain valid and shall not be withdrawn for a period of thirty (30) calendar days after the date for receipt of bids.
7. Bidder agrees that if written notice of acceptance of this bid is mailed, emailed, or delivered to the undersigned within thirty (30) days after the date in which bids are due, or at any time thereafter before it is withdrawn, the undersigned will sign and return the Contract Agreement, prepared in accord with the Bidding Documents and this bid as accepted; and will also provide proof of insurance coverage and required surety bonds.
8. Bidder understands that the Owner reserves the right to reject any and all bids, and to waive irregularities or informalities and enter into a contract for the work, as the Owner deems to be in the best interest of the State.
9. Bidder understands that the Owner reserves the right to accept any, or no, Alternate Bid, if requested, and that the Alternate Bids may be considered in any order or combination, and the low Bidder shall be determined on the basis of the sum of the base bid and any Alternate(s) accepted.

Subcontractors:
The Trade Contractor must identify all Subcontractors and Suppliers within 48 hours of the published date and time for which bids must be submitted, in accordance with Iowa Code Section 8A311, as amended by House File 646 in 2011. Subcontractors and suppliers may not be changed without the approval of the Owner. Requests for changing a Subcontractor or supplier must identify the reason for the proposed change, the name of the new Subcontractor or supplier, and the change in the subcontractor or supplier price as a result of the change. Any reduction in subcontractor or supplier price as a result of the change, if the change is approved by the Owner, shall be deducted from the Trade Contract Price via a deductive Change Order. Any such changes, if approved by the Owner, which result in an increase in the Trade Contract Price shall be borne by the Trade Contractor.

Enforcement of Reciprocal Resident Bidder Preference, per Iowa Code 73A.21.

All bidders shall either check the box next to “Resident Bidder” or check the box next to “Nonresident Bidder” and by doing so and signing thereafter certifies and attests to the same. All information requested must be provided. Seek out the advice of an attorney if you have questions.

“Resident Bidder” means a person or entity authorized to transact business in of the State of Iowa and having a place of business for transacting business within the State of Iowa at which it is conducting and has conducted business for at least three years prior to the date of the first advertisement for the public improvement. Note, however, that if a nonresident bidder’s state or foreign country has a more stringent definition of a resident bidder, the more stringent definition is applicable as to bidders from that state or foreign country.

☐ Resident Bidder

Name of Resident Bidder: _____

By: _____
Authorized Agent and Signatory of Resident Bidder

OR:

☐ Nonresident Bidder

Name of Nonresident Bidder: _____

Name of State or Foreign Country of Nonresident Bidder: _____

Particularly identify and describe any preference, labor preference, or any other type of preferential treatment, in effect in the nonresident bidder's state or foreign country at the time of this bid:
_____
_____
_____

NOTICE: Nonresident Bidders domiciled in a state or country with a resident labor force preference shall make and keep, for a period of not less than three years, accurate records of all workers employed on the public improvement. The records shall include each worker's name, address, telephone number when available, social security number, trade classification, and the starting ending time of employment.

By: _____
Authorized Agent and Signatory of Nonresident Bidder

Bid Form shall be signed by an officer of the company with authority to bind in a contract.
Notice of acceptance of this bid, or request for additional information by the Department of Administrative Services, may be addressed to the undersigned at the address set forth below:

Legal Name of Firm: _____

Date: _____

Signature of Bidder: _____

Title: _____

Typed Name of Signatory: _____

Email: _____

Business Address:
_____
_____
_____

Telephone Number: _____ Fax Number: _____

Federal Tax Identification Number: _____

Iowa Contractor Registration Number: _____

Bidder Safety Manager Name:_____

For an out-of-state Bidder, Bidder certifies that the Resident Preference given by the State or

Foreign Country of Bidder's residence, _____, is _____ %.

END OF SECTION

SECTION 01 1200

CONTRACT SUMMARY

PART 1 - GENERAL

1.01 SECTION INCLUDES

A. Project Information
B. Project Summary
C. Bid Scope Summary
D. Work Hour Restrictions
E. Access to Site
F. Coordination with Occupants
G. Rules for Construction Workers
H. Bid Package Instructions

1.02 PROJECT INFORMATION

A. Facility Name/Location: Clarinda Correctional Facility (CCF) 2000 N. 16th St., Clarinda, IA 51632
B. DAS Project #: 9223.00
C. Owner: State of Iowa, Department of Administrative Services, Hoover State Office Building, Level 3, 1305 East Walnut Street, Des Moines, IA 50319
D. Owner's Representative: Brad Tonyan, Iowa Department of Administrative Services, 109 SE 13th Street, Des Moines, IA 50319
E. Construction Manager: Brian Polzin The Samuels Group, 2929 Westown Parkway Suite 200, West Des Moines, IA 50266

1.03 PROJECT SUMMARY

A. The project includes the construction of a new kitchen and laundry building for the Clarinda Correctional Facility. Scope of the project includes general construction, concrete, masonry, precast, structural steel, EPDM roofing, food service equipment, fire suppression, plumbing, HVAC, electrical, communications, electronic safety/security, earthwork, paving, utilities, etc.
B. Target date to provide substantial completion is June 2, 2025.

1.04 BID SCOPE SUMMARY

A. Scope Applicable to All Bid Packages:
   1. The Contractor's Work includes all labor, supervision, materials, equipment, services, supplies, tools, facilities, transportation, hoisting, storage, receiving, licenses, inspections, certifications, overhead, profit, or other items required or reasonably inferable to properly and timely perform and complete all work and services to be performed by the Contractor pursuant to this Agreement. Unless specifically stated otherwise, incidental work required to accomplish the work of this Bid Package shall be included in the bid. This would include, but not be limited to, temporary facilities, protection of the work, security of equipment, materials, and work in progress, etc. **Contractor's Work shall be performed in accordance with the Drawings, Specification Divisions 00 and 01, and Specification sections applicable to each Contractor's scope**.
   2. The Contractor is responsible for all labor and equipment to unload, account for all material delivered, stock, and delivery for this scope of work. Storage and delivery of materials and equipment at the Site shall be permitted only to the extent approved in advance by the Construction Manager, and if anything so stored obstructs the progress

of any portion of the work, it shall be promptly removed or relocated by the Contractor without reimbursement.

3. On-site supervision by Prime Contractor at all times work by that contractor or their subcontractors/suppliers is taking place.
4. Provide all temporary facilities required for this scope of work including trailer, trailer power, telephone, secured storage, temporary power for work, temporary and task lighting for work, etc. as determined necessary by Contractor. Coordinate location of trailers, material storage and utility lines with Construction Manager. Limited space is available, and permission to bring any such facility or excess materials to the site shall be approved by the Construction Manager.
5. Contractor shall provide all equipment and tools for Contractor's own cleanup. Clean up shall be done at the end of every shift or more frequently if required for the Contractor to perform their work, for other Contractors to perform their work, as required by the Owner's operations, and at the discretion of the Construction Manager.
6. All turf, landscaping, and subgrade disturbances caused by equipment traffic or other activities related to the Contractor's scope shall be repaired or restored to proper conditions by the Contractor.
7. Protect adjacent existing building elements from damage from Scope of work. Repair existing building elements damaged during Contractor's Scope of work.
8. Work occurring in occupied areas of the prison can be shut down by the facility manager or construction manager at any time for noise, vibration, or any inconvenience to the facility's everyday operation. Coordinate disruptive work with the Construction Manager and give adequate notice for all shutdowns and inconvenient work. Work causing noise, vibration, or other interruption needs to be coordinated at least 72 hours before the start of work.
9. Work occurring in occupied areas of the prison will need to be performed at the convenience of the Owner. The work will likely need to be performed after normal working hours (nights) or on weekends. Any shutdown of an existing utility must be conducted during off hours.
10. Each Trade Contractor is responsible for protecting their work until acceptance by the owner. Each Trade Contractor is responsible for respecting the work completed by all other Trade Contractors and shall be responsible for replacing anything damaged.
11. Each Trade Contractor shall provide daily jobsite clean-up for debris and dust generated by the installation of their scope of work. Haul debris to the dumpster provided by the Construction Manager. Daily jobsite clean-up shall consist of all prime contractor's employees cleaning the work area for at least 30 minutes before leaving.
12. Each Trade Contractor shall provide all layout and surveying as required to complete their scope of work. The cost of testing and inspections shall be paid by the Owner as required by the Contract Documents. All testing and inspections shall be called for by each Trade Contractor and tests shall be coordinated with the Construction Manager. Retesting due to failed tests will be the responsibility of the Trade Contractor.
13. All work to be completed in accordance with the schedule and phasing included in the specification section and as noted in the Contract Documents. The contractor shall include additional mobilizations as required to meet the schedule and phasing as noted.
14. Each trade contractor is responsible to field verify all dimensions prior to fabrication of products.
15. Trade contractors and employees shall be responsible for following OSHA construction standards and compliance with such standards for the project.
16. Weekly meetings shall be conducted on site for construction activities, safety, scheduling, and overall project activities. A representative (Foreman, Lead Employee) from each bid package shall participate.

1.05 WORK HOUR RESTRICTIONS (Refer to Drawing G0.1 for zones A and B)

A. **Zone A (Construction Zone):** Gate opens at 6:30 AM and gate closes at 6:30 PM. (Monday through Friday). Standard Work hours are from 7:00 AM to 3:30 PM but can be extended to 6:30 PM, Monday through Friday. Saturday and Sunday work requests shall be submitted two weeks in advance to the CM's on-site superintendent and project manager.

B. **Zone B (Restricted Construction Zone With Tool Control):** Work hours are from 7:00 AM to 5:00 PM, Monday through Friday only. Saturday and Sunday construction is prohibited in this area. Tool control will be in effect for any work in the Secure Construction Zone area.

1.06 CONTRACTOR USE OF SITE AND PREMISES

A. Construction Operations: Limited to areas noted on Drawings.

B. Provide access to and from site as required by law and Owner:
   1. Emergency Building Exits During Construction: Keep all exits required by code open during construction period; provide temporary exit signs if exit routes are temporarily altered.
   2. Do not obstruct roadways, sidewalks, or other public ways without permission of Owner and permit if required.

C. Facility will be occupied at all times during duration of work. Contractor personnel shall conduct themselves in an agreeable manner at all times. Failure to do so may result in removal from the work site.

D. Parking in the West Parking lot of the Clarinda Correctional Facility is off limits. Contractors shall park in the designated parking areas noted on the project drawings and/or as directed by the construction manager and correctional facility.

E. **All Trade Contractors shall be responsible for the cleanup of their own work. Provide means and methods to ensure construction debris and materials are collected and removed to dumpsters on a daily basis.**

F. All ladders shall be taken down at the end of the workday and secured with locking devices.

1.07 OWNER OCCUPANCY

A. Owner intends to occupy the Project upon Substantial Completion.

B. Cooperate with the Owner to minimize conflict and facilitate the Owner's operations.

C. Schedule the Work to accommodate Owner occupancy.

D. Coordinate disruption of utilities, fire alarm system, electrical system, plumbing/HVAC systems, etc. with the facility a minimum of 72 hours prior to commencement of any work.

1.08 RULES FOR CONSTRUCTION WORKERS

A. The staff of the State of Iowa has a responsibility to protect the public by providing a secure environment. All work site rules must be followed to the letter, at all times.

B. All construction workers must have a background check completed prior to entering the campus to perform work.

C. Hot Work Permit Processes and Fire Watch, when necessary, will be adhered to for this project.

D. All State properties are tobacco-free. No smoking will be permitted or tolerated on campus unless in designated areas.

E. You are permitted access only to the work site and no other area of the institution.

F. **No drugs, alcohol, or firearms are allowed on the work site.**

G. Do not leave money, drugs, alcohol, or firearms in your personal vehicle.

H. Company and personal vehicles are to be parked and locked in designated or authorized area of the work.

I. Secure all tools at the end of the day.

J. Maintain control of all tools, supplies, and debris at all times during the work.
K. Never leave keys in any vehicle. If a security officer finds keys in a vehicle, they are under orders to turn them in to a security supervisor.
L. Do not give anything to residents or take anything from residents; if they offer, inform your supervisor.
M. Secure all tools at the end of each day. Never leave tools unattended. All tools shall be checked in at the beginning of the day and checked out at the end of the day. If security officers find loose tools, they are under orders to turn them into their supervisor.
N. All delivery vehicles must go directly to the job site. Extra time should be anticipated for all deliveries. Provide 24-hour notice to the facility of deliveries.
O. Contractors shall be responsible for the coordination and receiving of all deliveries. The Clarinda Correctional Facility shall not be responsible for receiving of contractor related materials, equipment, or deliveries.
P. During an emergency, follow the instructions of the security staff.
Q. Contractors shall wear clothing of a different color, pattern, fashion, etc., to distinguish themselves from inmates. **High Visibility Orange shall not be worn by contractors.**
R. Contractors shall conduct all construction work under OSHA compliance.
S. **All ladders shall be taken down at the end of the workday and secured with locking devices**.

1.09 BID PACKAGE INSTRUCTIONS –

A. **Bid Package #01 – General Construction:** Trade Contractor shall include all of the following, but not limited to, as part of the contract:
1. Provide all labor, material, and equipment for the Clarinda Kitchen & Laundry Addition project to provide and install Concrete, Masonry, Metals, Woods, Plastic, Composites, Thermal/Moisture Protection, Openings, Finishes, Specialties, and Furnishings based on all contract drawings and specifications.
2. Includes Divisions 00 and 01 including project management and supervision during construction activities associated with this Scope of Work. Contractor's Work shall be performed in accordance with the Drawings, Specification Divisions 00 and 01, and Specification sections applicable to each Contractor's scope.
3. Includes:

DIVISION 02 - DEMOLITION
- 02 4100 Demolition (As Applies to this Bid Package)

DIVISION 03 - CONCRETE
- 03 3000 Cast-in-Place Concrete
- 03 3511 Concrete Floor Finishes

DIVISION 03 CLARIFICATIONS*:*
- Includes installation of embedded plates supplied by precast contractor.
- Includes provide and install of grout and reinforced concrete wearing slabs at coolers and freezers after F.S.E.C. installation of cooler and freezer insulated screed.
- Includes excavation and backfill of footings and foundations.
- Excess spoils of footings and foundations excavation (fill material, organics, black dirt) shall be stocked piled at a location noted on site.
- Includes housekeeping pads, mechanical pads, generator pad, and site bollards.

DIVISION 04 - MASONRY
- 04 2000 Unit Masonry

DIVISION 04 CLARIFICATIONS*:*
- Includes installation of embedded plates supplied by precast contractor.

- Coordinate location of mixing tower and water access with CM.

DIVISION 05 - METALS

- 05 1200 Structural Steel Framing
- 05 2100 Steel Joist Framing
- 05 3100 Steel Decking
- 05 4000 Cold-Formed Metal Framing
- 05 5000 Metal Fabrications
- 05 5100 Metal Stairs

DIVISION 05 CLARIFICATIONS*:*

- Includes coordination with precast/precast erector for removal of bracing.

DIVISION 06 – WOOD, PLASTICS, AND COMPOSITES

- 06 1000 Rough Carpentry
- 06 4100 Architectural Wood Casework

DIVISION 06 CLARIFICATIONS*:*

- Includes provide and install of treated wood roof curbs for walk-in freezers and coolers condensing units
- Includes roof blocking and plywood at the roof area and parapet walls.

DIVISION 07 – THERMAL AND MOISTURE PROTECTION

- 07 2100 Thermal Insulation
- 07 2500 Weather Barriers
- 07 4213.19 Insulated Metal Wall Panels
- 07 8400 Firestopping (As Applies to this Bid Package)
- 07 9200 Joint Sealants (As Applies to this Bid Package)

DIVISION 07 CLARIFICATIONS*:*

- Includes provide and install vapor barrier and slab insulation after installation of walk-in coolers and freezers insulated screed.

DIVISION 08 - OPENINGS

- 08 1113 Hollow Metal Doors and Frames
- 08 3323 Overhead Coiling Doors
- 08 7100 Door Hardware
- 08 8000 Glazing

DIVISION 08 CLARIFICATIONS*:*

- Coordinate prep of doors and frames with controls and electrical.
- Coordinate keying and door prep requirements with owner.

DIVISION 09 - FINISHES

- 09 2116 Gypsum Board Assemblies
- 09 2216 Non-structural Metal Framing
- 09 3000 Tiling
- 09 5100 Acoustical Ceilings
- 09 9123 Interior Painting
- 09 9600 High-Performance Coatings

DIVISION 10 - SPECIALTIES

- 10 1401 Code-Required Signage
- 10 2600 Wall and Door Protection
- 10 2800 Toilet, Bath, and Laundry Accessories
- 10 4400 Fire Protection Specialties

DIVISION 11 - EQUIPMENT

- 11 1900 Detention Security Equipment
- 11 1910 Detention Hollow Metal

DIVISION 12 - FURNISHINGS

- 12 3600 Countertops

4. Bid Package #01 Unit Prices:

A. **Unit Price #01A** – Over Ex/Backfill with Engineered Fill (1 Cubic yard): Trade Contractor shall include all of the following, but not limited to, as part of the contract:
1. Provide a unit cost to excavate one cubic yard of soils and place one cubic yard of engineered compacted fill for over excavation requirements.
2. Reference Team Services Geotechnical Evaluation Report dated April 12, 2022.
3. Excess spoils (fill material, organics, black dirt) shall be stocked piled at a location noted on site.
4. Unit prices include all necessary material, plus cost for delivery, installation, insurance, overhead, and profit.
5. Owner reserves the right to reject Contractor's measurements of work in place that involves use of established unit prices and to have this work measured, at the Owner's expense, by an independent surveyor acceptable to the Contractor.

B. **Unit Price #01B** – Over Ex/Backfill with Lean Concrete (1 Cubic yard): Trade Contractor shall include all of the following, but not limited to, as part of the contract:
1. Provide a unit cost to excavate one cubic yard of soils and place one cubic yard of lean concrete fill for over excavation requirements.
2. Reference Team Services Geotechnical Evaluation Report dated April 12, 2022.
3. Excess spoils (fill material, organics, black dirt) shall be stocked piled at a location noted on site.
4. Unit prices include all necessary material, plus cost for delivery, installation, insurance, overhead, and profit.
5. Owner reserves the right to reject Contractor's measurements of work in place that involves use of established unit prices and to have this work measured, at the Owner's expense, by an independent surveyor acceptable to the Contractor.

5. Bid Package #01 Alternate:

A. **Alternate #1** – Laundry Equipment Opening Surrounds: Trade Contractor shall include all of the following, but not limited to, as part of the contract:
1. Provide all labor, material, and equipment for the opening surrounds as noted in detail 17/A8.1 for washer units and dryer units at Laundry Room 1204.
2. Reference Plans and specifications for additional information. General Information included on Drawing G0.1.
3. Reference Drawing A1.1 for location of Security and Screen Walls and Doors.
4. Includes Section 11 1940 Security and Screen Walls and Doors.
5. Include deduct off building elements provided in base bid for washer and dryer openings.
6. Coordinate work with other trades for installation.
7. Coordination: Revise or adjust affected adjacent work as necessary to completely integrate work of the alternate into Project.
8. Include as part of each alternate, miscellaneous devices, accessory objects, and similar items incidental to or required for a complete installation whether or not indicated as part of alternate.
9. Execute accepted alternates under the same conditions as other work of the Contract

6. **ADDITIONAL CLARIFICATIONS BID PACKAGE #01:**

A. Follow working hours as noted in the specifications for Zone A (Construction Zone) and Zone B (Restricted Construction Zone with Tool Control) – coordinate with the Construction Manager.
B. All activities must be coordinated with the Construction Manager.
C. All activities must be coordinated with the other Trade Contractors.
D. Includes all temporary barricades, enclosures, and protection for this Bid Package Scope of Work.
E. Includes all core drilling, penetrations, cutting, and patching required to complete the work.
F. Includes daily cleanup, removal, and lawful disposal of all scrap materials and debris generated from the site operation and installation of the work included in this Bid Package.
G. Debris shall be removed during normal construction hours. Dumpsters are supplied by Owner unless clarified in Bid Package.
H. Includes all caulking/sealant as it pertains to this Bid Package.
I. Level 2, Mechanical Room Louver OAL-1: Section of insulated wall panel below Louver OAL-1 shall be installed after all AHU and DOAS units have been installed by HVAC contractor. Coordinate install with all trades.

B. **Bid Package #02 – Precast:** Trade Contractor shall include all of the following, but not limited to, as part of the contract:

1. Provide all labor, material, and equipment for the Clarinda Kitchen & Laundry Addition project to provide and install Precast Architectural Concrete based on all contract drawings and specifications.
2. Includes Divisions 00 and 01 including project management and supervision during construction activities associated with this Scope of Work. Contractor's Work shall be performed in accordance with the Drawings, Specification Divisions 00 and 01, and Specification sections applicable to each Contractor's scope.
3. Includes:

DIVISION 03 – CONCRETE

- 03 4500 Precast Architectural Concrete

DIVISION 07 – THERMAL AND MOISTURE PROTECTION

- 07 9200 Joint Sealants (As Applies to this Bid Package)

4. **ADDITIONAL CLARIFICATIONS BID PACKAGE #02:**

A. Follow working hours as noted in the specifications for Zone A (Construction Zone) and Zone B (Restricted Construction Zone with Tool Control) – coordinate with the Construction Manager.
B. All activities must be coordinated with the Construction Manager.
C. All activities must be coordinated with the other Trade Contractors.
D. Coordinate with all trade contractors for location of embeds and openings.
E. Includes all temporary barricades, enclosures, and protection for this Bid Package Scope of Work.
F. Precast Contractor to provide site specific safety plan.
G. Includes all core drilling, penetrations, cutting, and patching required to complete the work.
H. Includes daily cleanup, removal, and lawful disposal of all scrap materials and debris generated from the site operation and installation of the work included in this Bid Package.
I. Debris shall be removed during normal construction hours. Dumpsters are supplied by Owner unless clarified in Bid Package.
J. Preinstallation Meeting: Convene one week prior to commencing work.
K. Includes all caulking/sealant as it pertains to this Bid Category. Seal all precast perimeter and intermediate joints (interior and exterior) in accordance with Section 07 9200.
L. Includes shims and 1" grout fill at precast to foundation wall.

M. Includes Embed plates (top of foundation walls). Installed by others.
N. Includes bracing, bracing anchoring needs, and removal of these components.
O. Coordinate removal of precast bracing components with steel erection.
P. Coordinate installation of 12' x 12' knock out panel area at south wall elevation with construction manager. The tentative date of knock out panel installation is May 2025.

C. **Bid Package #03 – Roofing/Gutters/Downspouts:** Trade Contractor shall include all of the following, but not limited to, as part of the contract:

1. Provide all labor, material, and equipment for the Clarinda Kitchen & Laundry Addition project to provide and install EPDM roofing system, sheet metal flashing/trim, parapet cap, gutters, and downspouts based on all contract drawings and specifications.
2. Includes Divisions 00 and 01 including project management and supervision during construction activities associated with this Scope of Work. Contractor's Work shall be performed in accordance with the Drawings, Specification Divisions 00 and 01, and Specification sections applicable to each Contractor's scope.
3. Includes:

DIVISION 07 – THERMAL AND MOISTURE PROTECTION

- 07 5300 Elastomeric Membrane Roofing
- 07 6200 Sheet Metal Flashing and Trim
- 07 7100 Roof Specialties
- 07 7123 Manufactured Gutters and Downspouts
- 07 7200 Roof Accessories
- 07 7260 Roof Fall Protection
- 07 9200 Joints Sealants (As Applies to this Bid Package)

4. **ADDITIONAL CLARIFICATIONS BID PACKAGE #03:**

A. Follow working hours as noted in the specifications for Zone A (Construction Zone) and Zone B (Restricted Construction Zone with Tool Control) – coordinate with the Construction Manager.
B. All activities must be coordinated with the Construction Manager.
C. All activities must be coordinated with the other Trade Contractors.
D. Includes all temporary barricades, enclosures, and protection for this Bid Package Scope of Work.
E. Includes all core drilling, penetrations, cutting, and patching required to complete the work.
F. Includes daily cleanup, removal, and lawful disposal of all scrap materials and debris generated from the site operation and installation of the work included in this Bid Package.
G. Debris shall be removed during normal construction hours. Dumpsters are supplied by Owner unless clarified in Bid Package.
H. Includes all caulking/sealant as it pertains to this Bid Package.
I. Includes pre-finished tamper proof gutter covers.
J. Includes saw cutting of reveal for metal flashing at connection to existing building.
K. Turn over Roof Fall Protection to owner.

D. **Bid Package #04 – Food Service:** Trade Contractor shall include all of the following, but not limited to, as part of the contract:

1. Provide all labor, material, and equipment for the Clarinda Kitchen & Laundry Addition project to provide and install food service equipment based on all contract drawings and specifications.
2. Includes Divisions 00 and 01 including project management and supervision during construction activities associated with this Scope of Work. Contractor's Work shall be

performed in accordance with the Drawings, Specification Divisions 00 and 01, and Specification sections applicable to each Contractor's scope

3. Includes:

DIVISION 07 – THERMAL AND MOISTURE PROTECTION

- 07 8400 Firestopping (As Applies to this Bid Package)
- 07 9200 Joints Sealants (As Applies to this Bid Package)

DIVISION 11 - EQUIPMENT

- 11 4000 Foodservice Equipment

4. Bid Package #04 Alternate:

A. **Alternate #2** – Alternate Bakery Equipment: Trade Contractor shall include all of the following, but not limited to, as part of the contract:

1. Provide all labor, material, and equipment to supply and install bakery equipment.
2. Reference Plans and specifications for additional information. General Information included on Drawing G0.1.
3. Final Electrical, Plumbing, and HVAC connections by others. Coordinate work.
4. Coordinate work with other trades for installation.
5. Coordination: Revise or adjust affected adjacent work as necessary to completely integrate work of the alternate into Project.
6. Include as part of each alternate, miscellaneous devices, accessory objects, and similar items incidental to or required for a complete installation whether or not indicated as part of alternate.
7. Execute accepted alternates under the same conditions as other work of the Contract.

5. Bid Package #04 Alternate:

B. **Alternate #3** – Alternate Kitchen Equipment: Trade Contractor shall include all of the following, but not limited to, as part of the contract:

8. Provide all labor, material, and equipment to supply and install bakery equipment.
9. Reference Plans and specifications for additional information. General Information included on Drawing G0.1.
10. Final Electrical, Plumbing, and HVAC connections by others. Coordinate work.
11. Coordinate work with other trades for installation.
12. Coordination: Revise or adjust affected adjacent work as necessary to completely integrate work of the alternate into Project.
13. Include as part of each alternate, miscellaneous devices, accessory objects, and similar items incidental to or required for a complete installation whether or not indicated as part of alternate.
14. Execute accepted alternates under the same conditions as other work of the Contract.

6. **ADDITIONAL CLARIFICATIONS BID PACKAGE #04:**

A. Follow working hours as noted in the specifications for Zone A (Construction Zone) and Zone B (Restricted Construction Zone with Tool Control) – coordinate with the Construction Manager.

Addendum #1

B. All activities must be coordinated with the Construction Manager.
C. All activities must be coordinated with the other Trade Contractors.
D. Includes all temporary barricades, enclosures, and protection for this Bid Package Scope of Work.
E. Includes daily cleanup, removal, and lawful disposal of all scrap materials and debris generated from the site operation and installation of the work included in this Bid Package.
F. Debris shall be removed during normal construction hours. Dumpsters are supplied by Owner unless clarified in Bid Package.
G. Includes all caulking/sealant as it pertains to this Bid Category.

E. **Bid Package #05 – Fire Suppression:** Trade Contractor shall include all of the following, but not limited to, as part of the contract:

1. Provide all labor, material, and equipment for the Clarinda Kitchen & Laundry Addition project to provide and install Fire Suppression system based on all contract drawings and specifications.
2. Includes Divisions 00 and 01 including project management and supervision during construction activities associated with this Scope of Work. Contractor's Work shall be performed in accordance with the Drawings, Specification Divisions 00 and 01, and Specification sections applicable to each Contractor's scope.
3. Includes Fire Suppression items noted in the Food Service Equipment MEP Drawings.
4. Includes:

DIVISION 02 – EXISTING CONDITIONS

- 02 4100 Demolition (As Applies to this Bid Package)

DIVISION 07 – THERMAL AND MOISTURE PROTECTION

- 07 8400 Firestopping (As Applies to this Bid Package)
- 07 9200 Joints Sealants (As Applies to this Bid Package)

DIVISION 21 – FIRE SUPPRESSION

- 21 0500 Basic Fire Suppression Requirements
- 21 0505 Fire Suppression Demolition for Remodeling
- 21 0529 Fire Suppression Supports and Anchors
- 21 1300 Fire Protection Systems

5. **ADDITIONAL CLARIFICATIONS BID PACKAGE #05:**

A. Follow working hours as noted in the specifications for Zone A (Construction Zone) and Zone B (Restricted Construction Zone with Tool Control) – coordinate with the Construction Manager.
B. All activities must be coordinated with the Construction Manager.
C. All activities must be coordinated with the other Trade Contractors.
D. Includes all temporary barricades, enclosures, and protection for this Bid Package Scope of Work.
E. Includes all core drilling, penetrations, cutting, and patching required to complete the work.
F. Includes daily cleanup, removal, and lawful disposal of all scrap materials and debris generated from the site operation and installation of the work included in this Bid Package.
G. Debris shall be removed during normal construction hours. Dumpsters are supplied by Owner unless clarified in Bid Package.
H. Includes firestopping and sealant associated to this contractor's scope of work.
I. Includes removal and resetting of existing ceiling tile for work associated to this bid package.
J. Submit all shop drawings to the State Fire Marshal office (SFM) for approval. Includes all fees associated with permits and inspections.

F. **Bid Package #06 – Plumbing and HVAC:** Trade Contractor shall include all of the following Scope of Work, but not limited to, as part of the contract:

1. Provide all labor, material, and equipment for the Clarinda Kitchen & Laundry Addition project to provide and install complete Plumbing and Heating/Ventilating/Air-Conditioning (HVAC) systems based on all contract drawings and specifications.
2. Includes Divisions 00 and 01 including project management and supervision during construction activities associated with this Scope of Work. Contractor's Work shall be

performed in accordance with the Drawings, Specification Divisions 00 and 01, and Specification sections applicable to each Contractor's scope.

3. Includes Mechanical, Plumbing, and HVAC items noted in the Food Service Equipment MEP Drawings.
4. Includes:

DIVISION 02 – EXISTING CONDITIONS

- 02 4100 Demolition (As Applies to this Bid Package)

DIVISION 07 – THERMAL AND MOISTURE PROTECTION

- 07 8400 Firestopping (As Applies to this Bid Package)
- 07 9200 Joints Sealants (As Applies to this Bid Package)

DIVISION 22 – PLUMBING

- 22 0500 Basic Plumbing Requirements
- 22 0505 Plumbing Demolition for Remodeling
- 22 0513 Motors
- 22 0516 Plumbing Expansion Compensation
- 22 0529 Plumbing Supports and Anchors
- 22 0548 Plumbing Vibration Isolation/Vibration Isolation Submittal Form
- 22 0553 Plumbing Identification
- 22 0716 Plumbing Equipment Insulation
- 22 0719 Plumbing Piping Insulation
- 22 0900 Instrumentation
- 22 1000 Plumbing Piping
- 22 1023 Natural Gas Piping
- 22 1030 Plumbing Specialties
- 22 1200 Tanks - Plumbing
- 22 1519 Compressed Air Systems
- 22 3000 Plumbing Equipment
- 22 4000 Plumbing Fixtures

DIVISION 23 – HEATING, VENTILATING, AND AIR CONDITIONING (HVAC)

- 23 0500 Basic HVAC Requirements
- 23 0505 HVAC Demolition for Remodeling
- 23 0513 Motors
- 23 0529 HAVC Supports and Anchors
- 23 0530 Roof Support and Wind Bracing
- 23 0548 HVAC Vibration Isolation, Vibration isolation Submittal Form
- 23 0553 HVAC Identification
- 23 0593 Testing, Adjusting, and Balancing
- 23 0713 Ductwork Insulation
- 23 0719 HVAC Piping Insulation
- 23 0800 HVAC Commissioning Requirements
- 23 0900 Controls
- 23 0913 Instrumentation
- 23 2300 Refrigeration Piping and Specialties
- 23 3100 Ductwork
- 23 3300 Ductwork Accessories
- 23 3423 Power Ventilators
- 23 3600 Air Terminal Units
- 23 3700 Air Inlets and Outlets
- 23 4000 Air Cleaning
- 23 6213 Air Cooled Condensing Units
- 23 7313 Indoor Modular Air Handling Units
- 23 8200 Terminal Heat Transfer Units

5. Bid Package #06 Alternates:

A. **Alternate #1** – Laundry Equipment Plumbing and HVAC: Trade Contractor shall include all of the following, but not limited to, as part of the contract:

1. Provide all labor, material, and equipment for the plumbing and HVAC needs to supply and install washer units and dryer units for Laundry Room 1204.
2. Includes supply of washer units and dryer units.
3. Reference Plans and specifications for additional information. General Information included on Drawing G0.1.
4. Coordinate work with other trades for installation.
5. Coordination: Revise or adjust affected adjacent work as necessary to completely integrate work of the alternate into Project.
6. Include as part of each alternate, miscellaneous devices, accessory objects, and similar items incidental to or required for a complete installation whether or not indicated as part of alternate.
7. Execute accepted alternates under the same conditions as other work of the Contract.

B. **Alternate #2** – Alternate Bakery Plumbing and HVAC: Trade Contractor shall include all of the following, but not limited to, as part of the contract:

1. Provide all labor, material, and equipment for the plumbing and HVAC needs for this alternate.
2. Reference Plans and specifications for additional information. General Information included on Drawing G0.1.
3. Coordinate work with other trades for installation.
4. Coordination: Revise or adjust affected adjacent work as necessary to completely integrate work of the alternate into Project.
5. Include as part of each alternate, miscellaneous devices, accessory objects, and similar items incidental to or required for a complete installation whether or not indicated as part of alternate.
6. Execute accepted alternates under the same conditions as other work of the Contract.

C. **Alternate #3** – Alternate Kitchen Plumbing and HVAC: Trade Contractor shall include all of the following, but not limited to, as part of the contract:

7. Provide all labor, material, and equipment for the plumbing and HVAC needs for this alternate.
8. Reference Plans and specifications for additional information. General Information included on Drawing G0.1.
9. Coordinate work with other trades for installation.
10. Coordination: Revise or adjust affected adjacent work as necessary to completely integrate work of the alternate into Project.
11. Include as part of each alternate, miscellaneous devices, accessory objects, and similar items incidental to or required for a complete installation whether or not indicated as part of alternate.
12. Execute accepted alternates under the same conditions as other work of the Contract.

6. **ADDITIONAL CLARIFICATIONS BID PACKAGE #06:**

A. Follow working hours as noted in the specifications for Zone A (Construction Zone) and Zone B (Restricted Construction Zone with Tool Control) – coordinate with the Construction Manager.

Addendum #1

B. All activities must be coordinated with the Construction Manager.
C. All activities must be coordinated with the other Trade Contractors.
D. Coordinate with the local utilities.
E. Includes all temporary barricades, enclosures, and protection for this Bid Package Scope of Work.

F. Includes daily cleanup, removal, and lawful disposal of all scrap materials and debris generated from the site operation and installation of the work included in this Bid Package.
G. Includes all core drilling, penetrations, cutting, and patching required to complete the work.
H. Includes firestopping and sealant associated to this contractor's scope of work.
I. Includes removal and resetting of existing ceiling tile for work associated to this bid package.
J. Cover ends of pipes and ductwork while stored and after installation.
K. Provide TAB services as called out in documents.
L. Coordinate and provide access to the commissioning agent for equipment to be reviewed.
M. Level 2, Mechanical Room Louver OAL-1: Section of insulated wall panel below Louver OAL-1 shall be installed after all AHU and DOAS units have been installed by HVAC contractor. Coordinate install with all trades.

G. **Bid Package #07 – Electrical:** Trade Contractor shall include all of the following Scope of Work, but not limited to, as part of the contract:

1. Provide all labor, material, and equipment for the Clarinda Kitchen & Laundry Addition project to provide and install complete electrical, communications, and electronic safety/security systems based on all contract drawings and specifications.
2. Includes Divisions 00 and 01 including project management and supervision during construction activities associated with this Scope of Work. Contractor's Work shall be performed in accordance with the Drawings, Specification Divisions 00 and 01, and Specification sections applicable to each Contractor's scope.
3. Includes Electrical items noted in the Food Service Equipment MEP Drawings.
4. Includes:

DIVISION 02 – EXISTING CONDITIONS

- 02 4100 Demolition (As Applies to this Bid Package)

DIVISION 07 – THERMAL AND MOISTURE PROTECTION

- 07 8400 Firestopping (As Applies to this Bid Package)
- 07 9200 Joints Sealants (As Applies to this Bid Package)

DIVISION 26 – ELECTRICAL

- 26 0500 Basic Electrical Requirements
- 26 0505 Electrical Demolition for Remodeling
- 26 0513 Wire and Cable
- 26 0526 Grounding and Bonding
- 26 0527 Supporting Devices
- 26 0533 Conduit and Boxes
- 26 0553 Electrical Identification
- 26 0573 Power System Study
- 26 0800 Commissioning of Electrical
- 26 0913 Power Monitoring and Control System
- 26 0933 Lighting Control Systems
- 26 2200 Dry Type Transformers
- 26 2416 Panelboards
- 26 2419 Motor Control
- 26 2726 Wiring Devices
- 26 2813 Fuses
- 26 2816 Disconnect Switches
- 26 2923 Variable Frequency Drives

- 26 3213 Packaged Engine Generator Systems
- 26 3600 Transfer Switch
- 26 4100 Lightning Protection Systems
- 26 4300 Surge Protection Devices
- 26 5119 LED Lighting

DIVISION – 27 COMMUNICATIONS

- 27 0500 Basic Communications Systems Requirements
- 27 0505 Technology Demolition For Remodeling
- 27 0526 Communications Bonding
- 27 0528 Interior Communication Pathways
- 27 0553 Identification and Administration
- 27 1100 Communication Equipment Rooms (CER)
- 27 1500 Horizontal Cabling Requirements
- 27 1710 Testing
- 27 1720 Structured Cabling System Warranty
- 27 5113 Paging Systems

DIVISION 28 – ELECTRONIC SAFETY AND SECURITY

- 28 0500 Basic Electronic Safety and Security Systems
- 28 1300 Electronic Access Control
- 28 2300 Video Surveillance 28 2300 Video Surveillance (VIDEO SURVEILLANCE EQUIPMENT PROVIDED AND INSTALLED BY OWNER. SPECIFICATION PROVIDED AS REFERENCE ONLY".
- 28 3100 Fire Alarm and Detection Systems

5. Bid Package #07 Alternates:

A. **Alternate #1** – Laundry Equipment Electrical: Trade Contractor shall include all of the following, but not limited to, as part of the contract:

1. Provide all labor, material, and equipment for electrical needs for Laundry Equipment (Washers and Dryers) for Laundry Room 1204.
2. Reference Plans and specifications for additional information. General Information included on Drawing G0.1.
3. Coordinate work with other trades for installation.
4. Coordination: Revise or adjust affected adjacent work as necessary to completely integrate work of the alternate into Project.
5. Include as part of each alternate, miscellaneous devices, accessory objects, and similar items incidental to or required for a complete installation whether or not indicated as part of alternate.
6. Execute accepted alternates under the same conditions as other work of the Contract.

B. **Alternate #2** – Alternate Bakery Equipment Electrical: Trade Contractor shall include all of the following, but not limited to, as part of the contract:

1. Provide all labor, material, and equipment for electrical needs for Bakery Equipment.
2. Reference Plans and specifications for additional information. General Information included on Drawing G0.1.
3. Coordinate work with other trades for installation.
4. Coordination: Revise or adjust affected adjacent work as necessary to completely integrate work of the alternate into Project.
5. Include as part of each alternate, miscellaneous devices, accessory objects, and similar items incidental to or required for a complete installation whether or not indicated as part of alternate.
6. Execute accepted alternates under the same conditions as other work of the Contract.

C. **Alternate #3** – Alternate Kitchen Equipment Electrical: Trade Contractor shall include all of the following, but not limited to, as part of the contract:

Addendum #1

Addendum #1

7. Provide all labor, material, and equipment for electrical needs for Bakery Equipment.
8. Reference Plans and specifications for additional information. General Information included on Drawing G0.1.
9. Coordinate work with other trades for installation.
10. Coordination: Revise or adjust affected adjacent work as necessary to completely integrate work of the alternate into Project.
11. Include as part of each alternate, miscellaneous devices, accessory objects, and similar items incidental to or required for a complete installation whether or not indicated as part of alternate.
12. Execute accepted alternates under the same conditions as other work of the Contract.

6. **ADDITIONAL CLARIFICATIONS BID PACKAGE #07**:
   A. Follow working hours as noted in the specifications for Zone A (Construction Zone) and Zone B (Restricted Construction Zone with Tool Control) – coordinate with the Construction Manager.
   B. All activities must be coordinated with the Construction Manager.
   C. All activities must be coordinated with all other Trade Contractors.
   D. Coordinate with the local utilities.
   E. Includes all temporary barricades, enclosures, and protection for this Bid Package Scope of Work.
   F. Includes temporary lighting and power for the building addition. Connect to existing power located on second floor Administration Building electrical room. Temp. lighting and temp. power to be OSHA compliant. Provide minimum qty. of two (2), 200 amp. temporary service panels with power outlets for the construction area.
   G. Provide temporary lighting with footcandle requirements per OSHA standards.
   H. Dumpsters supplied by Owner unless clarified in Bid Package.
   I. Includes daily cleanup, removal, and lawful disposal of all scrap materials and debris generated from the site operation and installation of the work included in this Bid Package.
   J. Includes all core drilling, penetrations, cutting, and patching required to complete the work.
   K. Includes firestopping and sealant associated to this contractor's scope of work.
   L. Includes removal and resetting of existing ceiling tile for work associated to this bid package.
   M. Obtain electrical permit and coordinate electrical inspections via the State Fire Marshall Office (SFM).

H. **Bid Package #08 – Civil:** Trade Contractor shall include all of the following Scope of Work, but not limited to, as part of the contract:
   1. Provide all labor, material, and equipment for the Clarinda Kitchen & Laundry Addition project for earthwork, exterior improvements, and utilities based on all contract drawings and specifications.
   2. Includes Divisions 00 and 01 including project management and supervision during construction activities associated with this Scope of Work. Contractor's Work shall be performed in accordance with the Drawings, Specification Divisions 00 and 01, and Specification sections applicable to each Contractor's scope.
   3. Includes:

DIVISION 02 – EXISTING CONDITIONS
- 02 4100 Demolition (As Applies to this Bid Package)

DIVISION 31 – EARTHWORK
- 31 1000 Site Clearing

- 31 2000 Earthwork
- 31 2005 Earth Moving for Building
- 31 2333 Trenching and Backfilling (As Applies to this Bid Package)
- 31 3500 Erosion and Sediment Control

DIVISION 32 – EXTERIOR IMPROVEMENTS

- 32 1123 Aggregate Base Courses
- 32 1313 Concrete Paving
- 32 1373 Pavement Joint Sealants
- 32 1723 Pavement Markings
- 32 9119 Landscape Grading
- 32 9219 Seeding

DIVISION 33 - UTILITIES

- 33 3100 Sanitary Sewerage Piping
- 33 3101 Sanitary Sewer Manholes
- 33 4000 Storm Sewer and Drainage
- 33 4900 Storm Drainage Structures

4. Bid Package #08 Unit Prices:

A. **Unit Price #08A** - Over Ex/Backfill with Engineered Fill (1 Cubic Yard): Trade Contractor shall include all of the following, but not limited to, as part of the contract:
   1. Provide a unit cost to excavate one cubic yard of soil and place one cubic yard of engineered compacted fill for over excavation requirements.
   2. Reference Team Services Geotechnical Evaluation Report dated April 12, 2022.
   3. Excess spoils (fill material, organics, black dirt) shall be stocked piled at a location noted on site.
   4. Unit prices include all necessary material, plus cost for delivery, installation, insurance, overhead, and profit.
   5. The owner reserves the right to reject Contractor's measurements of work in place that involves use of established unit prices and to have this work measured, at the Owner's expense, by an independent surveyor acceptable to the Contractor.

5. **ADDITIONAL CLARIFICATIONS BID PACKAGE #08:**

A. Follow working hours as noted in the specifications for Zone A (Construction Zone) and Zone B (Restricted Construction Zone with Tool Control) – coordinate with the Construction Manager.
B. All activities must be coordinated with the Construction Manager.
C. All activities must be coordinated with the other Trade Contractors.
D. Successful bidders will have access to a full set of construction documents ("CD") via Procore.
E. Includes all temporary barricades, enclosures, and protection for this Scope of Work.
F. Includes all safety material necessary to protect personnel in and from open trenches and excavations. Excavations shall be closed as soon as possible.
G. Demolition and offsite disposal of existing storm structures and piping shall be included and be at the expense of this bid package.
H. Excess spoils (fill material, organics, black dirt) shall be stocked piled at a location noted on site.
I. Demolished concrete paving shall be stockpiled at a location noted on site.
J. Dumpsters supplied by Owner unless clarified in Bid Package.
K. Includes daily cleanup, removal, and lawful disposal of all scrap materials and debris generated from the site operation and installation of the work included in this Bid Package.
L. Includes all cutting and patching required to complete the work.
M. Trenching and backfilling of footings and foundations by others.

I. **Work Performed by Owner:** The Clarinda Correctional Facility will perform the following work items:
   1. Relocate all moveable furniture, fixtures, and equipment (FF&E), including window treatments; and personal materials from each sequenced work area prior to demolition and construction activities and after new construction is completed.
   2. Provide and install temporary walkway and security fence along existing cell pod.
   3. Provide and install 16' Wide sliding gate/with motor at sally port road.
   4. Provide and install temporary gates at the south perimeter security fence.
   5. Provide and install west temporary road and west trailer pad area as noted on drawing C2.1.
   6. Site snow removal will be performed by the Owner.

J. **Owner Furnished Products:** The Clarinda Correctional Facility will provide the following materials for installation by the contractor:
   1. No items noted.

PART 2 - PRODUCTS – NOT USED
PART 3 - EXECUTION – NOT USED

END OF SECTION

SUBSTITUTION REQUEST FORM

Project: Clarinda Correctional Facility (CCF) Kitchen and Laundry Addition

Substitution Request Number: 1

From: VHF Sales, Inc.

To: Farnsworth Group & IMEG

Date: 02/20/2024

A/E Project Number: 0240202.00

Re:

Specification Title: Air Terminal Units

Description: Fan Powered Variable Air Volume Terminal Box

Section: 23 3600 Page: 136

Article/Paragraph: 2.03-L

Proposed Substitution: To add Tuttle and Bailey as an approved manufacturer.

Manufacturer: Tuttle and Bailey Address: Richardson, TX Phone: 972-680-9128

Trade Name: Tuttle and Bailey Model No.: FPS

History: ☐ New product ☐ 2-5 years old ☐ 5-10 yrs old ☑ More than 10 years old

Differences between proposed substitution and specified product: None.

☒ Point-by-point comparative data prepared by contractor and attached - REQUIRED BY A/E

Reason for not providing specified item:

Competitive bidding, equal product.

Similar Installation:

Project: NSK Bearing Plant HP Architect: NSK Corporation

Address: 1100 N 1st Street Owner: NSK Corporation

Clarinda, IA 51632 Date Installed: May 2023

Proposed substitution affects other parts of Work: ☒ No ☐ Yes; explain

Supporting Data Attached: ☑ Drawings ☐ Product Data ☐ Samples ☐ Tests ☐ Reports ☐

SUBSTITUTION REQUEST FORM

(Continued)

The Undersigned certifies:

- Proposed substitution has been fully investigated and determined to be equal or superior in all respects to specified product.
- Same warranty will be furnished for proposed substitution as for specified product.
- Same maintenance service and source of replacement parts, as applicable, is available.
- Proposed substitution will have no adverse effect on other trades and will not affect or delay progress schedule.
- Cost data as stated above is complete. Claims for additional costs related to accepted substitution which may subsequently become apparent are to be waived.
- Proposed substitution does not affect dimensions and functional clearances.
- Payment will be made for changes to building design, including A/E design, detailing, and construction costs caused by the substitution.
- Coordination, installation, and changes in the Work as necessary for accepted substitution will be complete in all respects.

Submitted by: Kimberly Beck

Signed by: Kimberly Beck

Firm: VHF Sales, Inc.

Address: 2655 SE Enterprise Drive
Grimes, IA 50111

Telephone: 515-986-3671

Attachments: Product Data

A/E's REVIEW AND ACTION

☐ Substitution approved - Make submittals in accordance with Specification Section 01 3300.
☒ Substitution approved as noted - Make submittals in accordance with Specification Section 01 3300.
☐ Substitution rejected - Use specified materials.
☐ Substitution Request received too late - Use specified materials.

Signed by: Michael J. McCarty Digitally signed by Mike McCarty, PE Date: 2024.02.21 08:35:24-06'00' Date: 2/21/2024

Additional Comments: ☐ Contractor ☐ Subcontractor ☐ Supplier ☐ Manufacturer ☒ A/E ☐ _____

Provide 3/4" elastomeric closed cell insulation liner. Performance shall meet requirements in schedule on M6.2. Provide parallel fan powered box, not series.

SUBSTITUTION REQUEST FORM

Project: Clarinda Correctional Facility (CCF) Kitchen and Laundry Addition

Substitution Request Number: 1

From: VHF Sales, Inc.

To: Farnsworth Group & IMEG

Date: 02/20/2024

A/E Project Number: 0240202.00

Re:

Specification Title: Terminal Heat Transfer Units

Description: Electric Wall Heaters/Electric Unit Heaters

Section: 23 8200 Page: 157-158

Article/Paragraph: 2.02-H & 2.03-J

Proposed Substitution: To add Raywall as an approved manufacturer.

Manufacturer: Raywall Address: Johnson City, TN Phone: 423-477-4131

Trade Name: Raywall Model No.: AFA / 5100

History: ☐ New product ☐ 2-5 years old ☐ 5-10 yrs old ☑ More than 10 years old

Differences between proposed substitution and specified product: None.

☒ Point-by-point comparative data prepared by contractor and attached - REQUIRED BY A/E

Reason for not providing specified item:
Competitive bidding, equal product.

Similar Installation:

Project: Dallas Center Grimes CSD Middle School Architect: DLR Group

Address: 1400 Vine Street Owner: Dallas Center Grimes CSD

Dallas Center, IA 50063 Date Installed: August 2011

Proposed substitution affects other parts of Work: ☒ No ☐ Yes; explain

Supporting Data Attached: ☑ Drawings ☐ Product Data ☐ Samples ☐ Tests ☐ Reports ☐

SUBSTITUTION REQUEST FORM

(Continued)

The Undersigned certifies:

- Proposed substitution has been fully investigated and determined to be equal or superior in all respects to specified product.
- Same warranty will be furnished for proposed substitution as for specified product.
- Same maintenance service and source of replacement parts, as applicable, is available.
- Proposed substitution will have no adverse effect on other trades and will not affect or delay progress schedule.
- Cost data as stated above is complete. Claims for additional costs related to accepted substitution which may subsequently become apparent are to be waived.
- Proposed substitution does not affect dimensions and functional clearances.
- Payment will be made for changes to building design, including A/E design, detailing, and construction costs caused by the substitution.
- Coordination, installation, and changes in the Work as necessary for accepted substitution will be complete in all respects.

Submitted by: Kimberly Beck

Signed by: Kimberly Beck

Firm: VHF Sales, Inc.

Address: 2655 SE Enterprise Drive
Grimes, IA 50111

Telephone: 515-986-3671

Attachments: Product Data

A/E's REVIEW AND ACTION

☐ Substitution approved - Make submittals in accordance with Specification Section 01 3300.
☒ Substitution approved as noted - Make submittals in accordance with Specification Section 01 3300. Electric Unit Heaters
☒ Substitution rejected - Use specified materials. Architectural Wall Heater
☐ Substitution Request received too late - Use specified materials.

Signed by: Michael J. McCarty Digitally signed by Mike McCarty, PE Date: 2024.02.21 08:15:57-06'00' Date: 2/21/2024

Additional Comments: ☐ Contractor ☐ Subcontractor ☐ Supplier ☐ Manufacturer ☒ A/E ☐ _____

Architectural Wall Heater: Heating element shall be nickel-chromium resistance wire enclosed in a steel sheath with copper brazed plate fins. Submitted product does not meet this requirement (AFA).

Electric Unit Heaters: Provide unit mounted and wired disconnect.