Farnsworth GROUP

# Addendum

**Addendum Number:** 2.0

**Addendum Issue Date**: March 1, 2024

**Owner:** State of Iowa Department of Corrections – Clarinda Correctional Facility

**Project Name:** Clarinda Correctional Facility – Kitchen & Laundry

**RFB Number:** 922300-02

**Containing**: 4 Pages; 3 Drawings; 0 Specifications

*This addendum amends the drawings and specifications of the above reference project and is hereby incorporated into the contract documents as part thereof. Bidders must acknowledge receipt of this Addendum in the space provided on the Bid Form.* ***FAILURE TO DO SO MAY SUBJECT BIDDER TO DISQUALIFICATION****.*

**Drawings**:

*General: NA*
*Life Safety: NA*
*Civil: NA*
*Structural: NA*

*Architectural:*

Item No. 1. A5.2 – WALL SECTIONS
Reference view 2 - WALL SECTION @ DRYER CHASE

1. **REVISE** note reading "3" RIGID INSULATION" to read "R-16 RIGID INSULATION"
2. **ADD** 1 layer of 5/8" moisture resistant type X gypsum board over the R-30 RIGID INSULATION at the dryer chase cap only

*Foodservice Equipment:*

Item No. 2. FS103 – FOODSERVICE EQUIPMENT PLAN AND SCHEDULE - AREA 3
Reference Foodservice Equipment Schedule – Area C

3. **REVISE** schedule as shown in updated attached sheet

Item No. 3. FS103 – FOODSERVICE EQUIPMENT PLAN AND SCHEDULE - AREA 3
Reference Foodservice Equipment Plan – Area 3

1. **REVISE** drawings to reflect a 108" x 30" Mobile Workcounter.

Item No. 4. FS200 – FOODSERVICE EQUIPMENT ELEVATIONS AND SECTIONS
Reference Foodservice Elevations views 3, 4, 5 and 6.

1. **REVISE** drawings to include additional details for fabrication for (2) Item 77 – Workcounter

Item No. 5. FSE100 – FOODSERVICE EQUIPMENT ELECTRICAL SCHEDULE & DETAILS
Reference Foodservice Equipment Electrical Schedule

1. **REVISE** schedule as shown in updated attached sheet

*Fire Protection: NA*
*Plumbing: NA*
*Mechanical: NA*
*Electrical:*

Item No. 6. E1.4 – LEVEL 01 PLAN – AREA A – POWER
E1.5 – LEVEL 02 PLAN – AREA A – POWER
E1.6 – LEVEL 01 PLAN – AREA B – POWER
E1.7 – LEVEL 02 PLAN – AREA B – POWER
E1.8 – LEVEL 01 PLAN – AREA A – SYSTEMS
E1.9 – LEVEL 01 PLAN – AREA B – SYSTEMS
E1.10 – LEVEL 02 PLAN – AREA A – SYSTEMS
E1.11 – LEVEL 02 PLAN – AREA B – SYSTEMS

**1. ADD** Bid Alternate Note block to say the following:

ALTERNATE NO. 2:

BASE BID CONDITION:

PROVIDE KITCHEN EQUIPMENT AS NOTED IN FSE DOCUMENTS WITH THE EXCEPTION OF NOTED ALTERNATE EQUIPMENT BUT DO NOT PROVIDE INSTALLATION OR HOOKUP SERVICES.

ALTERNATE BID CONDITION:

PROVIDE ALL NOTED ALTERNATE BAKERY EQUIPMENT AND FULL INSTALLATION OF ALL EQUIPMENT.

ALTERNATE NO. 3:

BASE BID CONDITION:

PROVIDE KITCHEN EQUIPMENT AS NOTED IN FSE DOCUMENTS WITH THE EXCEPTION OF NOTED ALTERNATE EQUIPMENT. PROVIDE ALL ROUGH-INS TO NOTED ALTERNATE EQUIPMENT BUT DO NOT PROVIDE INSTALLATION OR HOOKUP SERVICES.

ALTERNATE BID CONDITION:

PROVIDE ALL NOTED ALTERNATE NO. 3 EQUIPMENT AND FULL INSTALLATION OF ALL EQUIPMENT.

Item No. 7. E6.1 – ELECTRICAL SCHEDULES

1. **REVISE** Transfer Switch Schedule type GCC-1 from 100A to 60A.

Item No. 8. E6.3 – ELECTRICAL SCHEDULES

1. **REVISE** Luminaire Schedule fixture F4 approved manufacturers to include “Cooper LD6C”.
2. **REVISE** Luminaire Schedule fixture F4A approved manufacturers to include “Cooper LD6C”.
3. **REVISE** Luminaire Schedule fixture W4 approved manufacturers to include “Cooper McGraw-Edison IST”.

*Technology: NA*

**Specifications**:

Item No. 9. Section 07 2100 – THERMAL INSULATION

Reference 2.01 APPLICATIONS

1. **REVISE** item C to read as follows: *Insulation inside prefabricated Concrete Wall Panels: Integral Insulation (RI-2)*

Reference 2.02 FOAM BOARD INSULATION MATERIALS

2. **REVISE** item A.1 to read as follows: *Type and Compressive Resistance: Type IV, 25 psi (173 kPa), minimum.*
3. **REVISE** items 7 a,b,&c as follows:
    a. *DuPont de Nemours, Inc; Styrofoam Brand Square Edge: building.dupont.com/#sle.*
    b. *Kingspan Insulation LLC; GreenGuard XPS Type IV, 25 psi: www.kingspan.com/#sle.*
    c. *Owens Corning Corporation; FOAMULAR Type 250 Extruded Polystyrene (XPS) Insulation: www.ocbuilingspec.com/#sle.*
3. **ADD** item C. as follows:

    C. Integral Insulation (RI-2): Rigid expanded (EPS), extruded (XPS), or polyisocyanurate (ISO) insulation.
    1. Design and construct panels to maintain overall R-value of 16 minimum, with less than one percent change due to penetrations and connections, when calculated in accordance with ASHRAE 90.1, isothermal planes method.
    2. Compressive Resistance: 25 psi.
    3. Connectors: Non-conducting connectors designed and manufactured for use in insulated composite panels.
4. **ADD** item D. as follows:
    a. Extruded Polystyrene (XPS)-3 Board Insulation: Comply with ASTM C578 with either natural skin or cut cell surfaces.
        i. Type and Compressive Resistance: Type IV, 25 psi (276 kPa), minimum.
        ii. Flame Spread Index (FSI): Class A - 0 to 25, when tested in accordance with ASTM E84.
        iii. Smoke Developed Index (SDI): 175 or less, when tested in accordance with ASTM E84.
        iv. Type and Thermal Resistance, R-value: Type IV, 5.0 (0.88), minimum, per 1 inch thickness at 75 degrees F mean temperature.
        v. Board Edges: Square.
        vi. Type and Water Absorption: Type IV, 0.3 percent by volume, maximum, by total immersion.
        vii. Products:
            a. DuPont de Nemours, Inc; Styrofoam Brand Scoreboard: building.dupont.com/#sle.
            b. Kingspan Insulation LLC; GreenGuard XPS Type IV: www.kingspan.com/#sle.
            c. Owens Corning Corporation; FOAMULAR NGX Type 250 Next Generation Extruded: www.ocbuildingspec.com/#sle.
            d. Substitutions: See Section 01 6000 - Product Requirements.

Section 11 4000 - FOODSERVICE EQUIPMENT

Reference Section 3.06 ITEM SPECIFICATIONS

**REVISE** as follows:

Item No. 10. 109 Change to:

Food Processor **(BY OWNER)**

Item No. 11. 141 Change to:

**MOBILE WORKCOUNTER (ADD ALTERNATE – ALT 3)**

Two

Advance Tabco Model SS-309 or equal by Eagle Group or Metro Industries *R103

"Substitutions": As approved by Architect prior to bid"

Features: Length and width per Plan; 36" high; 14 gauge stainless steel top and understructure; stainless steel welded undershelf; stainless steel legs and underbracing; rolled rim edge; paint on sound deadening top; four 5" diameter swivel casters, all with brakes; correctional package tamper proof hardware

Item No. 12. Section 26 3600 – TRANSFER SWITCH

Reference - Article 2.02 PORTABLE GENERATOR (GCC-#)

1. **REVISE** paragraph B to read: Pad mount, powder coat painted NEMA 3R housing with lockable door, 60 amps, 600 volt. Color-coded cam-lock connectors. Submit product data and dimensioned drawings. Color selection by Architect.

**Product Approvals:**

The following manufacturers are approved as substitute products of the named Base Bid manufacturer(s). Approval is contingent upon manufacturers fulfilling all specification requirements, tangible and intangible, equally as well as specified product.

| **References/Item** | **Manufacturer/Supplier** |
|---|---|
| 07 2100 Thermal insulation | Atlas; EnergyShield XR |
| 11 1900 Detention Security Equipment 1.07.A.1 | Southern Folger Contracting, Inc. |
| E6.3 /Type F4 | Portfolio LD6C series |
| E6.3 /Type F4A | Portfolio LD6C series |
| E6.3 /Type W1 | McGraw-Edison IST series |

**Bids are Due:** March 7, 2024 / 2:00 PM local time to IMPACS Electronic Procurement System.

**END OF ADDENDUM**

**Issued By:**

FARNSWORTH GROUP, INC.
Kelsey Vetter, AIA
Project Architect

**Attachments:**

*Drawings:* FS103, FS200, FSE100
*Specifications:* NA
*Other:* Approved Substitution Request Forms – 07 2100, 11 1900

## FOODSERVICE EQUIPMENT SCHEDULE - AREA C

| ITEM # | QTY | DESCRIPTION | REMARKS |
|---|---|---|---|
| 100 | 7 | HAND SINK | |
| 101A | 5 | PAN STORAGE SHELVING | |
| 101B | 6 | PAN STORAGE SHELVING | BY OWNER |
| 102 | 3 | MOBILE LUG RACK | |
| 103 | 1 | UTILITY CART | BY OWNER |
| 104 | 1 | WORKCOUNTER W/SINKS | |
| 105 | 8 | MOBILE TRASH BIN | BY OWNER |
| 106 | 1 | OPEN NUMBER | |
| 107 | 1 | SPRAY RINSE | |
| 108 | 1 | WALL SHELF | |
| 109 | 1 | FOOD PROCESSOR | BY OWNER |
| 110 | 1 | OPEN NUMBER | |
| 111 | 21 | STAINLESS STEEL CORNER GUARD | |
| 112 | 1 | REACH-IN REFRIGERATOR, 2-SEC. | ADD ALTERNATE - ALT 3 |
| 113 | 1 | MOBILE EQUIPMENT STAND | |
| 114 | 1 | SLICER | ADD ALTERNATE - ALT 3 |
| 115 | 2 | DOUBLE WIDE WORKTABLE | |
| 116 | 1 | HORIZONTAL CUTTER/MIXER | ADD ALTERNATE - ALT 2 |
| 117 | 1 | FLOOR TROUGH | |
| 118 | 1 | HOSE STATION | |
| 119 | 1 | HOSE STATION SECURITY CABINET | |
| 120-127 | 1 | OPEN NUMBER | |
| 128 | 5 | CHEMICAL STORAGE SHELVING | |
| 129 | 1 | MOBILE WORKTABLE | |
| 130 | 1 | OPEN NUMBER | |
| 131 | 2 | CHEMICAL STORAGE SHELVING | BY OWNER |
| 132 | 1 | STACKED WASHER/DRYER | |
| 133 | 1 | OPEN NUMBER | |
| 134 | 3 | STAINLESS STEEL WALL CAP | |
| 135-139 | 1 | OPEN NUMBER | |
| 140 | 2 | MOBILE WORKTABLE | |
| 141 | 2 | MOBILE WORKTABLE | ADD ALTERNATE - ALT 3 |
| 142 | 5 | MOBILE WARMING CABINET | |
| 143 | 16 | MOBILE RACK | BY OWNER |
| 144 | 1 | 80 QUART MIXER | ADD ALTERNATE - ALT 3 |
| 145 | 1 | WORKCOUNTER W/SINKS | |
| 146 | 1 | WORKCOUNTER W/SINKS | |
| 147 | 2 | SHEET PAN DOLLY | |
| 148 | 1 | EXHAUST HOOD (TYPE I) | |
| 149 | 1 | STAINLESS STEEL WALL PANEL | |
| 150 | 1 | UTILITY DISTRIBUTION SYSTEM | |
| 151 | 1 | FIRE PROTECTION SYSTEM | |
| 152 | 1 | OPEN NUMBER | |
| 153 | 1 | DEMAND CONTROL VENTILATION SYSTEM | |
| 154 | 2 | 60 GALLON KETTLE | |
| 155 | 2 | 80 GALLON KETTLE | |
| 156 | 1 | FLOOR TROUGH | |
| 157 | 1 | OPEN NUMBER | |
| 158 | 2 | STEAMER, 2-SEC. | ADD ALTERNATE - ALT 3 |
| 159 | 1 | OPEN NUMBER | |
| 160 | 1 | STEAMER, 2-SEC. | ADD ALTERNATE - ALT 3 |
| 161 | 1 | STEAMER, 2-SEC. | |
| 162 | 1 | HOSE REEL | |
| 163 | 2 | RACK OVEN, 2-SEC. | |
| 164 | 2 | OVEN RACK, DOUBLE | |
| 165-167 | 1 | OPEN NUMBER | |
| 168 | 3 | HOSE REEL SECURITY CABINET | |
| 169 | 1 | FIRE PROTECTION SYSTEM | |
| 170 | 1 | FIRE PROTECTION SYSTEM | |
| 171 | 1 | OPEN NUMBER | |
| 172 | 2 | POT AND PAN CART | |
| 173 | 1 | POT & PAN SINK | |
| 174 | 1 | DISPOSER | |
| 175 | 1 | SPRAY RINSE | |
| 176-180 | 1 | OPEN NUMBER | |
| 181 | 1 | CART WASH STAINLESS STEEL WALL PANEL | |
| 182 | 1 | HOSE STATION | |
| 183 | 1 | FLOOR TROUGH | |
| 184 | 2 | HOSE REEL | |
| 185 | 2 | EYE/FACE WASH STATION | |
| 186 | 1 | SOILED DISHTABLE | |
| 187 | 2 | DISPOSER | |
| 188 | 1 | HOSE STATION SECURITY CABINET | |
| 189 | 1 | FLIGHT-TYPE DISHMACHINE W/DRYER | |
| 190 | 1 | EXHAUST DUCT RISER | |
| 191 | 2 | SPRAY RINSE | |
| 192 | 1 | FLOOR TROUGH | |
| 193 | 12 | DRYING RACK | BY OWNER |
| 194 | 1 | FLOOR TROUGH | |
| 195 | 1 | CONDENSATE HOOD | |

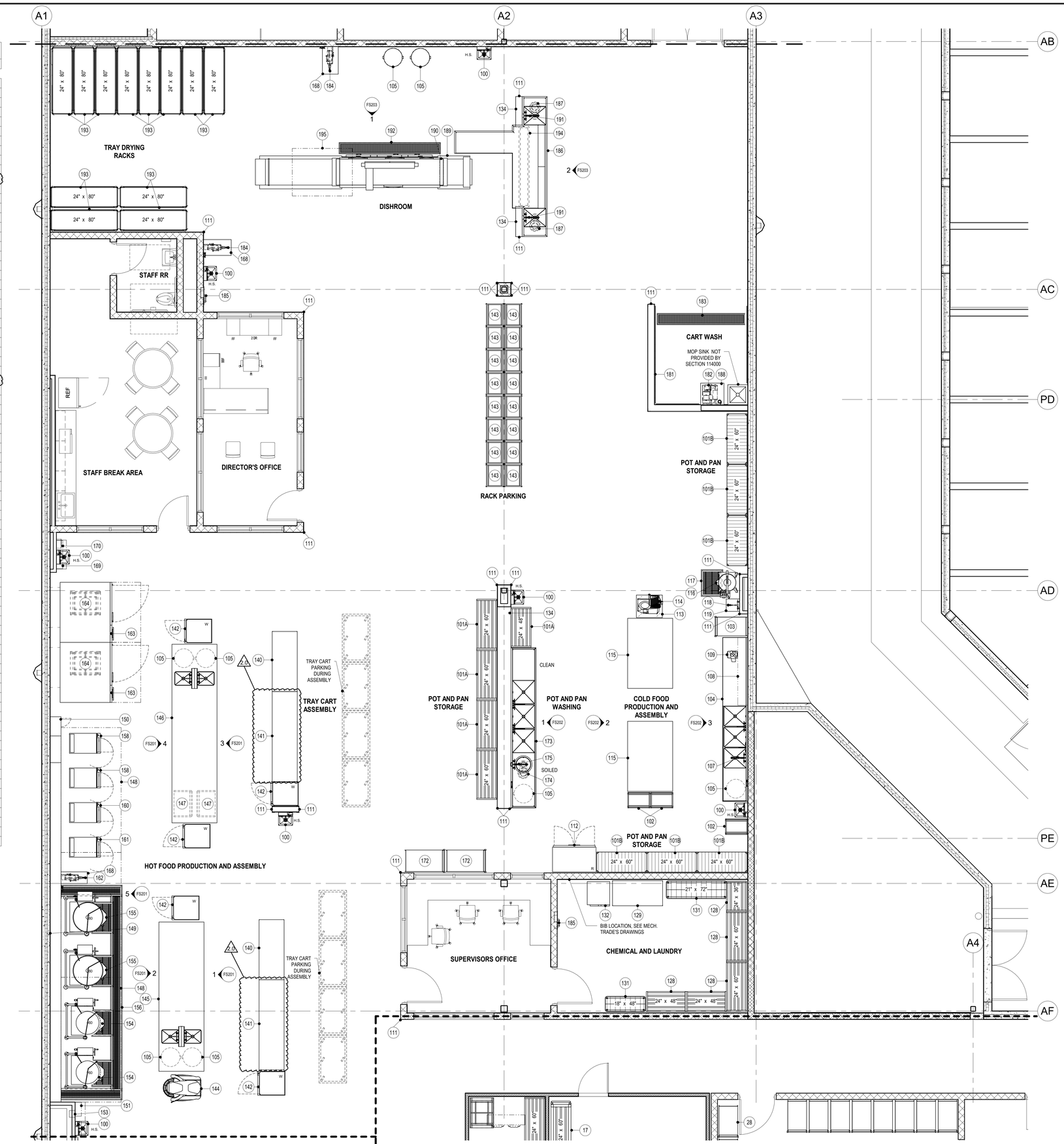


1 FOODSERVICE EQUIPMENT PLAN - AREA 3
1/4" = 1'-0"


Farnsworth GROUP
14225 UNIVERSITY AVENUE, SUITE 110
WALKEE, IOWA 50263
(515) 225-3469 / info@f-w.com
www.f-w.com
Engineers | Architects | Surveyors | Scientists

RIPPE ASSOCIATES
FOODSERVICE DESIGN + CONSULTING

kpff

IMEG

Bishop Engineering


ISSUE:

| # | DATE: | DESCRIPTION: |
|---|---|---|
| 2.0 | 03/01/2024 | ADDENDUM 2.0 |

**BID SET**

PROJECT:
STATE OF IOWA DEPARTMENT OF CORRECTIONS

**CLARINDA CORRECTIONAL FACILITY - KITCHEN & LAUNDRY ADDITION**

2000 N 16TH ST, CLARINDA, IA 51632

| | |
|---|---|
| DATE: | 02/09/2024 |
| DESIGNED: | EG/TP |
| DRAWN: | MM/BB |
| REVIEWED: | EG/RB |

SHEET TITLE:

**FOODSERVICE EQUIPMENT PLAN AND SCHEDULE - AREA 3**

SHEET NUMBER:

**FS103**

PROJECT NO.: 0240202.00
RFB922300-02

2/20/2024 4:16:11 PM

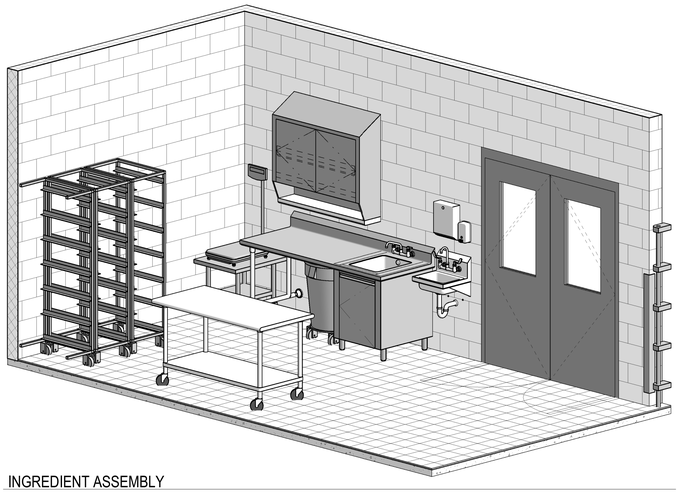

INGREDIENT ASSEMBLY

| RRA KEYNOTE LEGEND | |
|---|---|
| KEYNOTE | KEYNOTE TEXT |
| SD-1a | TABLE EDGE - TURN DOWN |
| SD-2a | BACKSPLASH - AT WALL |
| SD-3 | FRAMEWORK |
| SD-4 | TABLE & SINK LEGS |
| SD-6 | REMOVABLE UNDERSHELF |
| SD-7 | CABINET CONSTRUCTION |
| SD-9a | GENERAL USE 16"x20"x10" DP. |
| SD-17 | HINGED SOLID DOOR - INTEGRAL PULL |
| SD-28 | WALL CABINET W/SHELF |
| SD-30 | UTILITY CURB |
| SD-39 | STAINLESS STEEL CORNER GUARD |
| SD-70 | SHEET PAN DOLLY |

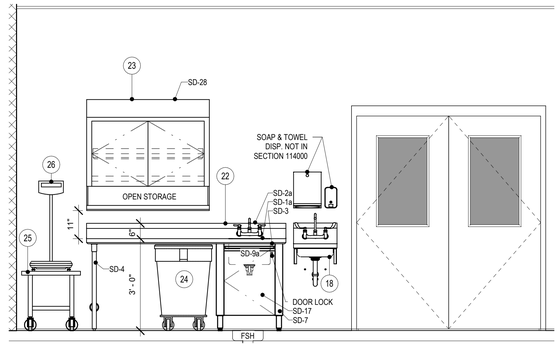


1 ITEM 22 - WORKCOUNTER W/ SINK
1/2" = 1'-0"

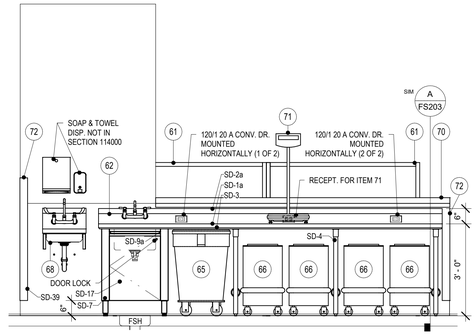


2 ITEM 62 - WORKCOUNTER W/ SINK
1/2" = 1'-0"

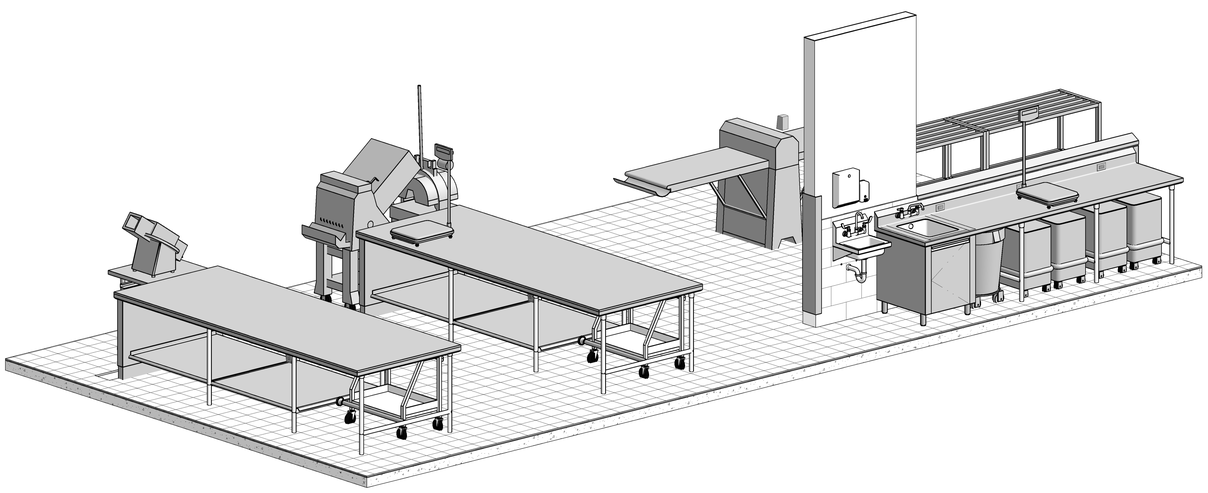

BAKERY PREP

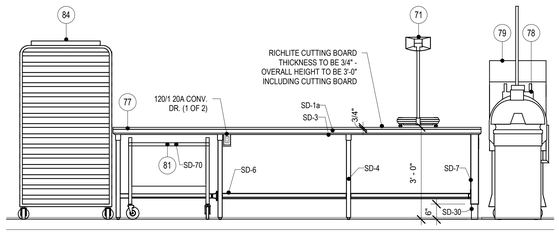


3 ITEM 77 - WORKCOUNTER 1
1/2" = 1'-0"

2.0

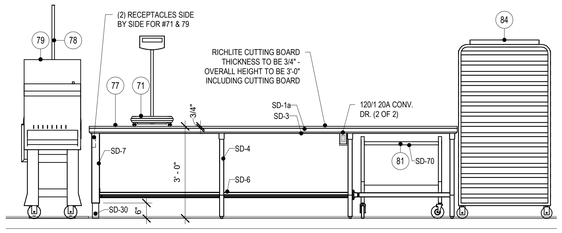


4 ITEM 77 - WORKCOUNTER 2
1/2" = 1'-0"

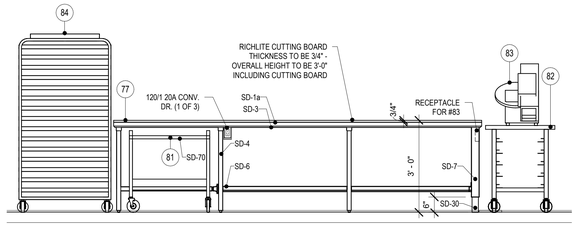


5 ITEM 77 - WORKCOUNTER 3
1/2" = 1'-0"

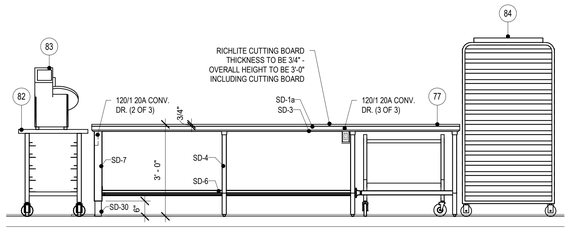


6 ITEM 77 - WORKCOUNTER 4
1/2" = 1'-0"


Farnsworth GROUP
14225 UNIVERSITY AVENUE, SUITE 110
WALKEE, IOWA 50263
(515) 225-3469 / info@f-w.com
www.f-w.com
Engineers | Architects | Surveyors | Scientists

RIPPE ASSOCIATES
FOODSERVICE DESIGN + CONSULTING

kpff

IMEG

Bishop Engineering


ISSUE:

| # | DATE: | DESCRIPTION: |
|---|---|---|
| 2.0 | 03/01/2024 | ADDENDUM 2.0 |

**BID SET**

PROJECT:
STATE OF IOWA DEPARTMENT OF CORRECTIONS

**CLARINDA CORRECTIONAL FACILITY - KITCHEN & LAUNDRY ADDITION**

2000 N 16TH ST, CLARINDA, IA 51632

| | |
|---|---|
| DATE: | 02/09/2024 |
| DESIGNED: | EG/TP |
| DRAWN: | MM/BB |
| REVIEWED: | EG/RB |

SHEET TITLE:

**FOODSERVICE EQUIPMENT ELEVATIONS AND SECTIONS**

SHEET NUMBER:

**FS200**

PROJECT NO.: 0240202.00
RFB922300-02

2/29/2024 4:23:07 PM

## FOODSERVICE EQUIPMENT ELECTRICAL SCHEDULE

| ITEM # | DESCRIPTION | | VOLTS | PHASE | AMPS | WATTS | HP | CONN. TYPE | RI HEIGHT | REMARKS |
|---|---|---|---|---|---|---|---|---|---|---|
| 7A | WALK-IN REFRIGERATOR/FREEZER COMPLEX | | 120 V | 1 | 20.0 A | | | DIRECT | 114" | DFA / NOTE W / SEE DETAIL SD-191 |
| 7B | FREEZER FLOOR HEAT | A | 208 V | 1 | | | | DIRECT | 48" | DFA / COOK'S ISSUANCE FLOOR HEAT / NOTE W / SEE DETAIL SD-188 / 30 AMP BREAKER / (1) CIRCUIT |
| 7B | FREEZER FLOOR HEAT | B | 208 V | 1 | | | | DIRECT | 48" | DFA / MAIN FREEZER FLOOR HEAT / NOTE W / SEE DETAIL SD-188 / 30 AMP BREAKER / (3) CIRCUITS ON ONE CONTACTOR |
| 8A | RACKED REFRIGERATION SYSTEM | A | 208 V | 3 | 138.9 A | | | DIRECT | 0" | NOTE D & W / MAX FUSE SIZE 175.0 AMPS / MIN CIRCUIT AMPACITY 148.4 AMPS |
| 8B | REFRIGERATION SYSTEM COIL - PRODUCE REFRIGERATOR | B | 120 V | 1 | 1.8 A | | | DIRECT | 96" | NOTE W / (2) COILS @ 1.8 AMPS EACH |
| 8C | REFRIGERATION SYSTEM COIL - MEAT & DAIRY REFRIGERATOR | C | 120 V | 1 | 1.8 A | | | DIRECT | 96" | NOTE W / (2) COILS @ 1.8 AMPS EACH |
| 8D | REFRIGERATION SYSTEM COIL - TEMPERING REFRIGERATOR | D | 208 V | 1 | 13.7 A | | | DIRECT | 96" | NOTE W |
| 8E | FREEZER SYSTEM COIL - MAIN FREEZER | E | 208 V | 1 | 22.8 A | | | DIRECT | 96" | NOTE W / (2) COILS @ 22.8 AMPS EACH |
| 8F | FREEZER SYSTEM COIL - BAKERY FREEZER | F | 208 V | 1 | 9.1 A | | | DIRECT | 96" | NOTE W |
| 8G | REFRIGERATION SYSTEM COIL - BAKERY REFRIGERATOR | G | 120 V | 1 | 1.8 A | | | DIRECT | 96" | NOTE W |
| 11 | HEATED AIR CURTAIN | A | 480 V | 3 | 22.0 A | | 1/2, 1/2 | DIRECT | 96" | PROVIDE 30 AMP CIRCUIT |
| 11 | HEATED AIR CURTAIN | B | 480 V | 3 | 28.3 A | | 1/2, 1/2 | DIRECT | 96" | PROVIDE 35 AMP CIRCUIT |
| 12 | AIR CURTAIN | | 120 V | 1 | 3.4 A | | 1/5, 1/5 | DIRECT | 96" | PROVIDE 15 AMP CIRCUIT |
| 13 | MANUAL SLIDING DOOR (FRZ) | | 120 V | 1 | 3.0 A | | | DIRECT | 86" | ELECTRICAL TRADES TO PROVIDE AND INSTALL FROSTOP DISCONNECT KEYSWITCH / FINAL CONNECTIONS BY ELECTRICAL TRADES |
| 26 | BENCH SCALE | | 120 V | 1 | | | | RECEPT. | 18" | AC ADAPTER W/INTERNAL BATTERY |
| 34 | FOOD CUTTER | | 120 V | 1 | 13.0 A | | 1 | RECEPT. | 60" | INTERCHANGEABLE PLUG IN LOCATION W/ITEM #114 / ADD ALTERNATE / ELECTRICAL TRADES TO ROUGH IN AND CAP AS NEEDED |
| 40 | MOBILE HOT/COLD TRANSPORT CART | | 120 V | 1 | | | | RECEPT. | 0" | VFY. UTILITIES W/OWNER / (13) CIRCUITS SERVICED THRU #41A & B |
| 41A | UTILITY DISTRIBUTION SYSTEM | | 120 V | 1 | | | | DIRECT | 126" | (6) 20.0 AMP CIRCUITS TO SERVICE (6) #40 / FSEC TO PREWIRE RECEPTACLES IN UDS / FINAL CONNECTIONS BY ELECTRICAL TRADES / SEE SHEET FSE101 |
| 41B | UTILITY DISTRIBUTION SYSTEM | | 120 V | 1 | | | | DIRECT | 126" | (7) 20.0 AMP CIRCUITS TO SERVICE (7) #40 / FSEC TO PREWIRE RECEPTACLES IN UDS / FINAL CONNECTIONS BY ELECTRICAL TRADES / SEE SHEET FSE102 |
| 62 | WORKCOUNTER W/SINK | | 120 V | 1 | | | | DIRECT | 10" | NOTE A / STUB UP THRU ADJACENT WALL / (3) 20.0 AMP CIRCUITS TO SERVICE (1) #71 & (2) CONV. DRS |
| 63 | 140 QUART MIXER | | 208 V | 3 | 14.8 A | | 5 | DIRECT | 60" | ADD ALTERNATE / ELECTRICAL TRADES TO ROUGH-IN AND CAP AS NEEDED |
| 64 | WATER METER W/TEMPERATURE RANGE | | 120 V | 1 | 5.0 A | | | RECEPT. | 54" | ADD ALTERNATE / ELECTRICAL TRADES TO ROUGH-IN AND CAP AS NEEDED |
| 67 | SPIRAL MIXER | | 208 V | 3 | 32.0 A | | 15 | DIRECT | 48" | ADD ALTERNATE / ELECTRICAL TRADES TO ROUGH-IN AND CAP AS NEEDED |
| 69 | SHEETER | | 120 V | 1 | 8.3 A | | | RECEPT. | 60" | ADD ALTERNATE / ELECTRICAL TRADES TO ROUGH-IN AND CAP AS NEEDED |
| 71 | DIGITAL BENCH SCALE | A | 120 V | 1 | | | | DUPLEX | 0" | AC ADAPTER W/INTERNAL BATTERY |
| 71 | DIGITAL BENCH SCALE | B | 120 V | 1 | | | | DUPLEX | 0" | SERVICED THRU #77A / ADD ALTERNATE / ELECTRICAL TRADES TO ROUGH-IN AND CAP AS NEEDED / AC ADAPTER W/INTERNAL BATTERY |
| 74 | ROLL-IN PROOFER, 2 DOUBLE RACKS | | 208 V | 3 | | 5000 W | | DIRECT | 90" | NEUTRAL WIRE CIRCUITRY NEEDED TO PROVIDE 120V CONTROL / ADD ALTERNATE / ELECTRICAL TRADES TO ROUGH-IN AND CAP AS NEEDED |
| 77 | BAKERY WORKCOUNTER W/RICHLITE TOP | A | 120 V | 1 | | | | DIRECT | 10" | NOTE A / STUB UP THRU CURB / (4) 20.0 AMP CIRCUITS TO SERVICE (2) CONV. DRS & #71B & 79 |
| 77 | BAKERY WORKCOUNTER W/RICHLITE TOP | AA | 120 V | 1 | | | | DIRECT | 10" | NOTE A / STUB UP THRU CURB / (4) 20.0 AMP CIRCUITS TO SERVICE (3) CONV. DRS & (1) #83 |
| 77 | BAKERY WORKCOUNTER W/RICHLITE TOP | B | 208 V | 3 | | | | DIRECT | 10" | NOTE A / STUB UP THRU CURB / (1) 20.0 AMP CIRCUIT TO SERVICE #78 |
| 78 | DIVIDER ROUNDER | | 208 V | 3 | 10.0 A | | 3/4 | DIRECT | 0" | SERVICED THRU #77B / ADD ALTERNATE / ELECTRICAL TRADES TO ROUGH-IN AND CAP AS NEEDED |
| 79 | BREAD SLICER | | 120 V | 1 | 7.0 A | | 1/2 | RECEPT. | 0" | SERVICED THRU #77A / ADD ALTERNATE / ELECTRICAL TRADES TO ROUGH-IN AND CAP AS NEEDED |
| 83 | BUN SLICER | | 120 V | 1 | 6.8 A | 816 W | 1/3 | RECEPT. | 0" | SERVICED THRU #77AA / ADD ALTERNATE / ELECTRICAL TRADES TO ROUGH-IN AND CAP AS NEEDED |
| 85 | ROLL-IN BLAST CHILLER | A | 208 V | 3 | 10.6 A | 3400 W | | DIRECT | 106" | |
| 85 | BLAST CHILLER REMOTE CONDENSING UNIT | B | 208 V | 3 | 53.3 A | 16400 W | 9 | DIRECT | 0" | |
| 87 | RACK OVEN, 2-SEC. | | 120/208 V | 3 | | 1800 W | | DIRECT | 90" | NOTE I & L / ADD ALTERNATE / ELECTRICAL TRADES TO ROUGH-IN AND CAP AS NEEDED |
| 89 | FIRE PROTECTION SYSTEM | A | 120 V | 1 | | | | DIRECT | | NOTE J, K & L / AT CEILING / WIRING FOR CONTROLS / SEE DETAIL / TO SERVE (1) #87 |
| 89 | ELECTRIC GAS VALVE | B | 120 V | 1 | | | | DIRECT | 120" | DFA DEDICATED, NON-INTERRUPTED CIRCUIT |
| 90 | FIRE PROTECTION SYSTEM | A | 120 V | 1 | | | | DIRECT | | NOTE J, K & L / AT CEILING / WIRING FOR CONTROLS / SEE DETAIL / TO SERVE (1) #87 |
| 90 | ELECTRIC GAS VALVE | B | 120 V | 1 | | | | DIRECT | 120" | DFA / DEDICATED, NON-INTERRUPTED CIRCUIT |
| 91 | ICE MAKER | | 208 V | 1 | 4.2 A | | | RECEPT. | 66" | |
| 2.0 109 | FOOD PROCESSOR | | 120 V | 1 | 12.0 A | | 1.5 | RECEPT. | 52" | VFY. UTILITIES W/OWNER |
| 112 | REACH-IN REFRIGERATOR, 2-SEC. | | 120 V | 1 | 10.7 A | | 1/3 | RECEPT. | 84" | ADD ALTERNATE / ELECTRICAL TRADES TO ROUGH-IN AND CAP AS NEEDED |
| 114 | SLICER | | 120 V | 1 | 6.0 A | 720 W | 1/2 | RECEPT. | 60" | INTERCHANGEABLE PLUG IN LOCATION W/ITEM #34 / ADD ALTERNATE / ELECTRICAL TRADES TO ROUGH-IN AND CAP AS NEEDED |
| 116 | HORIZONTAL CUTTER/MIXER | | 208 V | 3 | 22.0 A | | 5 | RECEPT. | 18" | PROVIDE 30 AMP CIRCUIT / ADD ALTERNATE / ELECTRICAL TRADES TO ROUGH IN AND CAP AS NEEDED |
| 132 | STACKED WASHER/DRYER | A | 120 V | 1 | | | .9 | RECEPT. | 30" | PROVIDE 15 AMP CIRCUIT |
| 132 | STACKED WASHER/DRYER | B | 120 V | 1 | | | 1/3 | RECEPT. | 30" | PROVIDE 15 AMP CIRCUIT |
| 142 | MOBILE WARMING CABINET | A | 120 V | 1 | 12.0 A | 1500 W | | RECEPT. | 0" | (1) SERVICED THRU #145 A (2) SERVICED THRU #146 |
| 142 | MOBILE WARMING CABINET | B | 120 V | 1 | 12.0 A | 1500 W | | RECEPT. | 30" | |
| 144 | 80 QUART MIXER | | 208 V | 3 | 12.0 A | | 3 | DIRECT | 0" | SERVICED THRU #145 B / ADD ALTERNATE / ELECTRICAL TRADES TO ROUGH-IN AND CAP AS NEEDED |
| 145 | WORKCOUNTER W/SINKS | A | 120 V | 1 | | | | DIRECT | 10" | NOTE A / STUB UP THRU CURB / (4) 20.0 AMP CIRCUITS TO SERVICE (3) CONV. DRS & (1) #142A |
| 145 | WORKCOUNTER W/SINKS | B | 208 V | 3 | | | | DIRECT | 10" | NOTE A / STUB UP THRU CURB / (1) 20.0 AMP CIRCUIT TO SERVICE #144 |
| 146 | WORKCOUNTER W/SINKS | | 120 V | 1 | | | | DIRECT | 10" | NOTE A / STUB UP THRU CURB / (6) 20.0 AMP CIRCUITS TO SERVICE (4) CONV. DRS & (2) #142 |
| 148 | EXHAUST HOOD (TYPE I) | A | 120 V | 1 | | 400 W | | DIRECT | 108" | DFA / NOTE I / SEE DETAIL |
| 148 | EXHAUST HOOD (TYPE I) | B | 120 V | 1 | | 400 W | | DIRECT | 108" | DFA / NOTE I / SEE DETAIL |
| 148 | EXHAUST HOOD (TYPE I) | C | 120 V | 1 | | 400 W | | DIRECT | 108" | DFA / NOTE I / SEE DETAIL |
| 150 | UTILITY DISTRIBUTION SYSTEM | | 120/208 V | 3 | 20.0 A | | | DIRECT | 110" | DFA / NOTE Y |
| 151 | FIRE PROTECTION SYSTEM | A | 120 V | 1 | | | | DIRECT | | NOTE J, K & L / AT CEILING / WIRING FOR CONTROLS / SEE DETAIL / TO SERVE #148 A, B & C |
| 151 | ELECTRIC GAS VALVE | B | 120 V | 1 | | | | DIRECT | 120" | DFA / DEDICATED, NON-INTERRUPTED CIRCUIT |
| 153 | DEMAND CONTROL VENTILATION SYSTEM | | 120 V | 1 | 15.0 A | | | DIRECT | 36" | SEE DETAIL / TO SERVICE HOOD #148 |
| 154 | 60 GALLON KETTLE | | 120 V | 1 | 10.0 A | | | RECEPT. | 0" | NOTE L / SERVICED THRU #150 |
| 155 | 80 GALLON KETTLE | | 120 V | 1 | 10.0 A | | | RECEPT. | 0" | NOTE L / SERVICED THRU #150 |
| 158 | STEAMER, 2-SEC. | A | 120 V | 1 | 2.0 A | | | DIRECT | 0" | NOTE L / SERVICED THRU #150 / FLEXIBLE CONDUIT / ADD ALTERNATE / ELECTRICAL TRADES TO ROUGH-IN AND CAP AS NEEDED |
| 160 | STEAMER, 2-SEC. | A | 120 V | 1 | 2.0 A | | | DIRECT | 0" | NOTE L / SERVICED THRU #150 / FLEXIBLE CONDUIT / ADD ALTERNATE / ELECTRICAL TRADES TO ROUGH-IN AND CAP AS NEEDED |
| 161 | STEAMER, 2-SEC. | A | 120 V | 1 | 2.0 A | | | DIRECT | 0" | NOTE L / SERVICED THRU #150 / FLEXIBLE CONDUIT |
| 163 | RACK OVEN, 2-SEC. | | 120/208 V | 3 | | 1800 W | | DIRECT | 90" | NOTE I & L |
| 169 | FIRE PROTECTION SYSTEM | A | 120 V | 1 | | | | DIRECT | | NOTE J, K & L / AT CEILING / WIRING FOR CONTROLS / SEE DETAIL / TO SERVE (1) #163 |
| 169 | ELECTRIC GAS VALVE | B | 120 V | 1 | | | | DIRECT | 120" | DFA / DEDICATED, NON-INTERRUPTED CIRCUIT |
| 170 | FIRE PROTECTION SYSTEM | A | 120 V | 1 | | | | DIRECT | | NOTE J, K & L / AT CEILING / WIRING FOR CONTROLS / SEE DETAIL / TO SERVE (1) #163 |
| 170 | ELECTRIC GAS VALVE | B | 120 V | 1 | | | | DIRECT | 120" | DFA / DEDICATED, NON-INTERRUPTED CIRCUIT |
| 174 | DISPOSER | | 208 V | 3 | 8.8 A | | 3 | DIRECT | 18" | NOTE C / SEE DETAIL |
| 182 | HOSE STATION | | 120 V | 1 | | | 2 | RECEPT. | 84" | |
| 187 | DISPOSER | | 208 V | 3 | 8.8 A | | 3 | DIRECT | 18" | NOTE C / SEE DETAIL |
| 189 | FLIGHT-TYPE DISHMACHINE W/DRYER | A | 480 V | 3 | 86.3 A | | | DIRECT | 80" | DFA / NOTE I |

## GENERAL NOTES - ELECTRICAL

NOTE: GENERAL NOTES REFER TO GENERAL CONDITIONS. ALL CONDITIONS MAY NOT EXIST ON THIS PROJECT.

1. THESE DRAWINGS ARE FOR USE BY THE PROJECT ENGINEERS IN PREPARING THEIR DRAWINGS. THESE DRAWINGS ARE INCIDENTAL TO OUR SERVICES AND MUST BE REVIEWED AND APPROVED BY A PROPERLY LICENSED DESIGN PROFESSIONAL BEFORE BEING USED FOR ANY OTHER PURPOSES. RIPPE ASSOCIATES IS NOT LICENSED AS A DESIGN PROFESSIONAL AND DOES NOT HOLD ITSELF OUT AS SUCH.
2. SERVICES SHOWN ON THIS PLAN ARE EQUIPMENT REQUIREMENTS FOR FOODSERVICE EQUIPMENT ONLY. LOCATIONS, SIZES AND HEIGHTS ABOVE FINISHED FLOOR ARE APPROXIMATELY AS REQUIRED BY EQUIPMENT TO BE FURNISHED. SINCE MULTIPLE SOURCES FOR THE EQUIPMENT MAY BE SPECIFIED, SLIGHT VARIATIONS IN UTILITY LOADS, CONNECTION SIZES AND NEMA PLUG CONFIGURATIONS CAN OCCUR. DESIGN BUILDING UTILITY SYSTEM ACCORDINGLY AND ADD NOTES TO THE ELECTRICAL CONTRACT DOCUMENTS INDICATING SLIGHT VARIATIONS ARE TO BE INCLUDED IN ELECTRICAL TRADES WORK AT NO ADDITIONAL COST.
3. THESE DRAWINGS ARE NOT TO BE USED TO ROUGH-IN AND/OR TO SET SLEEVES BY. SINCE REQUIRED ALLOWANCES MUST BE MADE FOR MULTIPLE EQUIPMENT SOURCES AND FOR VALVES, FITTINGS, DISCONNECTS, ETC. WHICH WILL BE FURNISHED UNDER ELECTRICAL TRADES. FSEC IS RESPONSIBLE FOR PREPARING DIMENSIONED ROUGH-IN AND SLEEVE LOCATION PLANS PER SPECIFICATIONS TO ACCOMMODATE THE EXACT EQUIPMENT BEING PROVIDED.
4. ALL 120V DUPLEX RECEPTACLES TO BE MINIMUM 20 AMP. CIRCUIT AND MOUNTED VERTICALLY, UNLESS OTHERWISE NOTED ON PLAN.
5. ELECTRICAL TRADES TO PROVIDE ALL NECESSARY DISCONNECT SWITCHES FOR EQUIPMENT INSTALLED AHEAD OF EQUIPMENT CONTROL OR SWITCH.
6. THE FSEC IS RESPONSIBLE FOR SETTING THE EQUIPMENT IN PLACE. FINAL CONNECTION FOR THIS EQUIPMENT IS THE RESPONSIBILITY OF THE ELECTRICAL TRADES.
7. HOLES IN FOODSERVICE EQUIPMENT FOR ELECTRICAL SERVICES PROVIDED BY FSEC.
8. BUILDING POWER PANEL BREAKERS SERVING FOODSERVICE EQUIPMENT SHOULD BE EQUIPPED WITH GROUND FAULT INTERRUPT PROTECTION IN ACCORDANCE WITH NATIONAL ELECTRIC CODE FOLLOWED BY MUNICIPALITY AND/OR LOCAL CODE. DO NOT PROVIDE GROUND FAULT INTERRUPT RECEPTACLES AT THE EQUIPMENT UNLESS RECEPTACLE IS READILY ACCESSIBLE WITHOUT HAVING TO MOVE EQUIPMENT OR EMPLOY A STEP LADDER.
9. UTILITY CONNECTIONS SHOWN ARE THOSE REQUIRED TO SERVICE FOOD SERVICE EQUIPMENT ONLY. MECHANICAL TRADES SHOULD VERIFY WITH OWNER WHETHER ADDITIONAL UTILITIES ARE REQUIRED FOR EXISTING, FUTURE OR VENDOR FURNISHED NON-FOODSERVICE EQUIPMENT LOCATED WITHIN THE AREA SHOWN ON THIS PLAN.
10. DESIGN INCOMING UTILITY SERVICES TO ACCOMMODATE 100% OF THE LOADS INDICATED; DO NOT APPLY DIVERSITY FACTOR AS ALL EQUIPMENT CAN BE OPERATING SIMULTANEOUSLY DURING PEAK SERVICE PERIODS.

## SCHEDULE NOTES - ELECTRICAL

NOTE: SCHEDULE NOTES PERTAIN TO INDIVIDUAL ITEMS AS INDICATED IN THE FOODSERVICE EQUIPMENT ELECTRICAL SCHEDULE.

A THE FSEC WILL PROVIDE RECEPTACLES IN FABRICATED EQUIPMENT AS REQUIRED AND WILL PREWIRE ELECTRICAL COMPONENTS IN COUNTER TO JUNCTION BOXES IN COUNTER BASE FOR FINAL CONNECTION BY ELECTRICAL TRADES. INTERCONNECTIONS BETWEEN SECTIONS OF FABRICATED COUNTERS BY FSEC.

C. WIRE THRU TIME DELAY RELAY, SOLENOID VALVE AND CONTROL PANEL TO DISPOSER.

D. ALL REFRIGERATION SYSTEMS ARE LOCATED APPROXIMATELY WHERE SHOWN ON THE PLAN UNLESS OTHERWISE NOTED. THE FOLLOWING ITEMS ARE NOT BY THE FSEC: ROOF CURBS/CONCRETE PADS; SLEEVED & SEALED PENETRATIONS IN ROOFS/FLOORS/CEILINGS/WALLS. VERIFY EXACT LOCATON WITH ARCHITECT/ENGINEER.

I. ELECTRICAL TRADES TO WIRE AUTOMATIC CONTROLS OR INTERLOCK DEVICE BETWEEN EQUIPMENT AND EXHAUST FAN SO EXHAUST FAN TURNS ON ONCE EQUIPMENT IS OPERATIONAL.

J. ELECTRICAL TRADES TO INTERWIRE FIRE PROTECTION SYSTEM WITH BUILDING ALARM SYSTEM AND TO MAKE-UP AIR FAN SHUT-OFF.

K. FIRE PROTECTION SYSTEM REQUIRES 24 HOUR, EMERGENCY SEPARATE ELECTRICAL SERVICE. ELECTRICAL TRADES TO INTERWIRE FIRE PROTECTION SYSTEM WITH ELECTRICAL GAS SHUT-OFF VALVE FOR ALL COOKING EQUIPMENT BELOW HOODS. ELECTRICAL TRADES TO ALSO INTERWIRE FIRE PROTECTION SYSTEM WITH BUILDING ALARM SYSTEM.

L. ELECTRICAL TRADES TO INTERWIRE FIRE PROTECTION SYSTEM TO POWER SHUT-OFF DEVICE, SUPPLIED BY ELECTRICAL TRADES, SO THAT POWER TO ALL ELECTRIC COOKING EQUIPMENT AND CONVENIENCE RECEPTACLES BELOW HOODS IS SHUT OFF UPON ACTIVATION OF THE FIRE PROTECTION SYSTEM.

W. INTERCONNECT THIS EQUIPMENT WITH BUILDING EMERGENCY POWER.

Y. WHEN A UTILITY DISTRIBUTION SYSTEM IS SPECIFIED, ELECTRICAL TRADES SHALL:
1.INSTALL MAIN SERVICE FEEDERS AND OVERCURRENT PROTECTION DEVICES; INSTALL ELECTRICAL CONDUIT AND WIRING FROM ROUGH-IN LOCATION TO RACEWAY TERMINALS IN VERTICAL CHASE BY SYSTEM MANUFACTURER.
2.CONNECT UL LISTED POWER SUPPLY CORDS AND PREWIRED FLEXIBLE CONDUIT SET, ALL PROVIDED BY SYSTEM MANUFACTURER WITH APPROPRIATE EQUIPMENT ITEMS.
3.INTERCONNECT FIRE PROTECTION SYSTEM MICROSWITCH OR RELAY TO POWER SHUT-OFF DEVICE FOR MAIN SERVICE FEEDERS.
4.PROVIDE 24 VOLT POWER SUPPLY CIRCUIT FROM CONTROL BOX IN RISER TO AUTOMATIC STEAM SHUT-OFF VALVE, SEE DETAIL.
5.SPECIAL NOTE – NO MODIFICATION OF ANY MANUFACTURED RACEWAY SHALL BE UNDERTAKEN BY ANY ENTITY WITHOUT THE EXPRESS, WRITTEN APPROVAL AND/OR SUPERVISION OF THE RACEWAY MANUFACTURER.

THE FSEC WILL:

1.INTERCONNECT FIELD JOINTS BY BOLTING BUSBAR AND/OR WIRING TOGETHER. ALL FITTINGS, BOLTS, ETC. SHALL BE PRE-FITTED AND FURNISHED BY THE SYSTEM MANUFACTURER. THE CONTROL WIRE FIELD JOINT WILL BE PROVIDED WITH A QUICK-DISCONNECT DEVICE.

2.INSPECT FOR LOOSE CONNECTIONS CAUSED BY SHIPPING AND TIGHTEN AS REQUIRED.

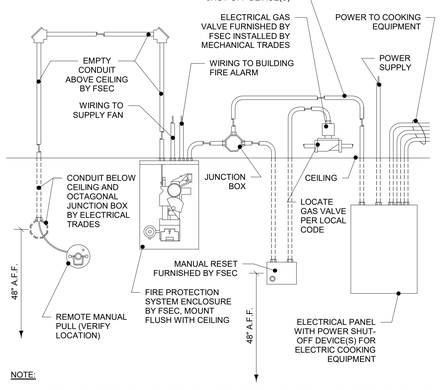


NOTE:

1. ELECTRICAL COMPONENTS AND INTERWIRING BY ELECTRICAL TRADES UNLESS NOTED OTHERWISE.
2. CONDUIT CONCEALED IN WALL WHEREVER POSSIBLE. EXPOSED CONDUIT TO BE CHROME-PLATED.

## WET CHEMICAL FIRE PROTECTION SYSTEM

WIRING DIAGRAM - ELECTRIC GAS VALVE

ROBERT RIPPE & ASSOCIATES, INC. © 2011 ROBERT RIPPE

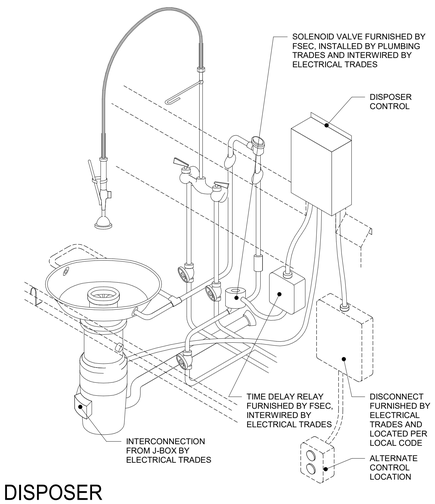


## DISPOSER

WITH TIME DELAY RELAY

ROBERT RIPPE & ASSOCIATES, INC. © 2011 ROBERT RIPPE

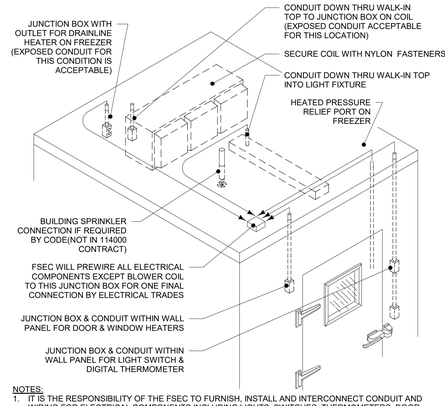


NOTES:

1. IT IS THE RESPONSIBILITY OF THE FSEC TO FURNISH, INSTALL AND INTERCONNECT CONDUIT AND WIRING FOR ELECTRICAL COMPONENTS INCLUDING LIGHTS, SWITCHES, THERMOMETERS, DOOR, WINDOW, PRESSURE RELIEF PORT HEATERS AND RECEPTACLE FOR DRAINLINE HEATER TO EASILY ACCESSIBLE JUNCTION BOX ON TOP OF WALK-IN FOR FINAL CONNECTION BY ELECTRICAL TRADES
2. ALL INTERCONNECTING CONDUIT RUN ABOVE WALK-IN PANELS OR WITHIN WALL PANELS. EXPOSED CONDUIT INSIDE WALK-IN WILL NOT BE ACCEPTABLE EXCEPT FOR THE CONNECTIONS SHOWN AND NOTED IN THE ABOVE ILLUSTRATION.
3. SEAL PENETRATIONS THROUGH CEILING, WALLS AND INSIDE ELECTRICAL CONDUIT OUTSIDE AND INSIDE WALK-IN WITH DOW CORNING #999A SILICONE SEALANT.
4. PROVIDE HOLES FOR SPRINKLER HEAD (IF REQUIRED) AND ELECTRICAL CONDUIT.
5. PROVIDE 1/2" OD PVC CONDUIT AT ALL PENETRATIONS THRU INSULATED PANELS

## WALK-IN REFRIGERATOR/FREEZER SD-191

ROBERT RIPPE & ASSOCIATES, INC. © 2011 ROBERT RIPPE

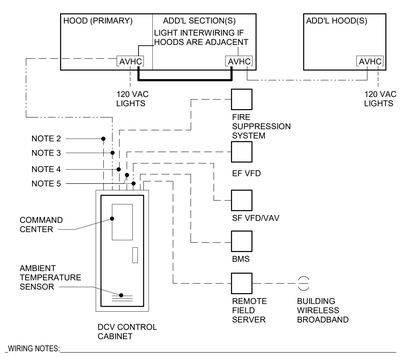


WIRING NOTES:

1. ALL WIRING OF ELECTRICAL EQUIPMENT MUST BE DONE TO MEET NEC AND LOCAL CODES.
2. (2) WIRES AND GROUND FROM DCV CONTROL CABINET TO NON-INTERRUPTIBLE SUPPLY VOLTAGE SERVICE BY ELECTRICAL CONTRACTOR.
3. (1) CAT 5 CABLE FROM DCV CONTROL CABINET TO THE PRIMARY HOOD AVHC BY ELECTRICAL CONTRACTOR.
4. (2) WIRES FROM DCV CONTROL CABINET TO FIRE SUPPRESSION SYSTEM MICRO SWITCHES BY ELECTRICAL CONTRACTOR.
5. (6) WIRE LOW VOLTAGE CABLE FROM DCV CONTROL CABINET TO EACH VFD BY ELECTRICAL CONTRACTOR.

LEGEND

- FIELD WIRING BY E.C.
- WIRING BY GAYLORD
- CAT 5 FIELD WIRING BY E.C.
- CAT 5 FIELD WIRING BY GAYLORD

## GAYLORD DCV SYSTEM

ELECTRICAL WIRING DETAIL

ROBERT RIPPE & ASSOCIATES, INC. © 2011 ROBERT RIPPE

ELECTRICAL LEGEND

| | | |
|---|---|---|
| | DR | DUPLEX RECEPTACLE |
| | SR | SINGLE RECEPTACLE |
| | FR | FLOOR RECEPTACLE |
| S | SW | SWITCH |
| | V | VOLTS |
| | AMP | AMPERES |
| | PH | PHASE |
| | W | WATTS |
| | KW | KILOWATT |
| | HP | HORSEPOWER |
| | JB | JUNCTION BOX |
| | | EMPTY JUNCTION BOX |
| | + | DISTANCE ABOVE FINISHED FLOOR |
| | DN+ | BRING SERVICE DOWN FROM ABOVE |
| | | CEILING TO A DISTANCE ABOVE FINISHED FLOOR |
| | COMP | COMPRESSOR |
| | | MOTOR |
| | | SOLENOID |
| | | DATA OUTLET |
| | | VOICE OUTLET |
| | AFF | ABOVE FINISHED FLOOR |
| | CLG | CEILING |
| | DFA | DOWN FROM ABOVE |
| | ET | ELECTRICAL TRADES |
| | ELEC | ELECTRICAL |
| | FSEC | FOODSERVICE EQUIPMENT CONTRACTOR |


Farnsworth GROUP
14225 UNIVERSITY AVENUE, SUITE 110
WALKEE, IOWA 50263
(515) 225-3469 / info@f-w.com
www.f-w.com
Engineers | Architects | Surveyors | Scientists

RIPPE ASSOCIATES
FOODSERVICE DESIGN + CONSULTING

kpff

IMEG

Bishop Engineering


ISSUE:

| # | DATE: | DESCRIPTION: |
|---|---|---|
| 2.0 | 03/01/2024 | ADDENDUM 2.0 |

**BID SET**

PROJECT:

STATE OF IOWA DEPARTMENT OF CORRECTIONS

**CLARINDA CORRECTIONAL FACILITY - KITCHEN & LAUNDRY ADDITION**

2000 N 16TH ST, CLARINDA, IA 51632

| | |
|---|---|
| DATE: | 02/09/2024 |
| DESIGNED: | EG/TP |
| DRAWN: | MM |
| REVIEWED: | EG/RB |

SHEET TITLE:

**FOODSERVICE EQUIPMENT ELECTRICAL SCHEDULE & DETAILS**

SHEET NUMBER:

**FSE100**

PROJECT NO.: 0240202.00
RFB922300-02

2/29/2024 1:49:42 PM

# SUBSTITUTION REQUEST FORM

Project: DOC Clarinda Correctional Facility Kitchen & Launtry Addition

Substitution Request Number: _____

From: Matthew Hartman

To: Farnsworth Group

Date: 2/15/24

The Samuels Group

A/E Project Number: 0240202

Re: _____

Specification Title: Thermal Insulation

Description: XPS Board Insulation

Section: 072100 Page: 2

Article/Paragraph: 2.02

Proposed Substitution: Atlas EnergyShield XR

Manufacturer: Atlas Address: East Moline, IL Phone: _____

Trade Name: EnergyShield XR Model No.: _____

History: ☑ New product ☐ 2-5 years old ☐ 5-10 yrs old ☐ More than 10 years old

Differences between proposed substitution and specified product:

Polyiso alternate to XPS application in below grade and perimeter of foundation

☐ Point-by-point comparative data prepared by contractor and attached - REQUIRED BY A/E

Reason for not providing specified item: _____

Similar Installation:

Project: _____ Architect: _____

Address: _____ Owner: _____

Date Installed: _____

Proposed substitution affects other parts of Work: ☐ No ☐ Yes; explain _____

Supporting Data Attached: ☐ Drawings ☐ Product Data ☐ Samples ☐ Tests ☐ Reports ☐ _____

# SUBSTITUTION REQUEST FORM

**(Continued)**

The Undersigned certifies:

- Proposed substitution has been fully investigated and determined to be equal or superior in all respects to specified product.
- Same warranty will be furnished for proposed substitution as for specified product.
- Same maintenance service and source of replacement parts, as applicable, is available.
- Proposed substitution will have no adverse effect on other trades and will not affect or delay progress schedule.
- Cost data as stated above is complete. Claims for additional costs related to accepted substitution which may subsequently become apparent are to be waived.
- Proposed substitution does not affect dimensions and functional clearances.
- Payment will be made for changes to building design, including A/E design, detailing, and construction costs caused by the substitution.
- Coordination, installation, and changes in the Work as necessary for accepted substitution will be complete in all respects.

Submitted by: Matthew Hartman

Signed by: Matt Hartman

Firm: Roofing Representatives

Address: 900 Kacina Rd Hiawatha, IA 52233

Telephone: 319-321-3272

Attachments:

A/E's REVIEW AND ACTION

- [X] Substitution approved - Make submittals in accordance with Specification Section 01 3300.
- [ ] Substitution approved as noted - Make submittals in accordance with Specification Section 01 3300.
- [ ] Substitution rejected - Use specified materials.
- [ ] Substitution Request received too late - Use specified materials.

Signed by: Kelly Vetter

Date: 2.26.2024

Additional Comments: ☐ Contractor ☐ Subcontractor ☐ Supplier ☐ Manufacturer ☐ A/E ☐ _____

# SUBSTITUTION REQUEST FORM

Project: DOC CCF Kitchen and Laundry Addition Clarinda, IA

Substitution Request Number: _____

From: Southern Folger Contracting

To: _____

Date: 2/23/24

A/E Project Number: _____

Re: _____

Specification Title: Detention Security Equipment

Description: Detention Security Equipment

Section: 111900 Page: 111900-5

Article/Paragraph: 111900/1.7/A.2

Proposed Substitution: Southern Folger Contracting, Inc.

Manufacturer: _____ Address: PO Box 58 Newcastle, CA 95658 Phone: 916-900-6593

Trade Name: Southern Folger Contracting, Inc. Model No.: _____

History: ☐ New product ☐ 2-5 years old ☐ 5-10 yrs old ☐ More than 10 years old

Differences between proposed substitution and specified product: None

☐ Point-by-point comparative data prepared by contractor and attached - REQUIRED BY A/E See qualification package

Reason for not providing specified item:

Substitution request to have Southern Folger Contracting listed as approved DEC to bid project

Similar Installation: See qualification package

Project: _____ Architect: _____

Address: _____ Owner: _____

Date Installed: _____

Proposed substitution affects other parts of Work: ☐ No ☐ Yes; explain _____

See qualification package

Supporting Data Attached: ☐ Drawings ☐ Product Data ☐ Samples ☐ Tests ☐ Reports ☐ _____

# SUBSTITUTION REQUEST FORM

**(Continued)**

The Undersigned certifies:

- Proposed substitution has been fully investigated and determined to be equal or superior in all respects to specified product.
- Same warranty will be furnished for proposed substitution as for specified product.
- Same maintenance service and source of replacement parts, as applicable, is available.
- Proposed substitution will have no adverse effect on other trades and will not affect or delay progress schedule.
- Cost data as stated above is complete. Claims for additional costs related to accepted substitution which may subsequently become apparent are to be waived.
- Proposed substitution does not affect dimensions and functional clearances.
- Payment will be made for changes to building design, including A/E design, detailing, and construction costs caused by the substitution.
- Coordination, installation, and changes in the Work as necessary for accepted substitution will be complete in all respects.

Submitted by: Southern Folger Contracting

Signed by: Dick McCoy

Firm: Southern Folger Contracting

Address: PO Box 58 Newcastle, CA 95658

Telephone: 256-466-9186

Attachments: SFC qualification package

A/E's REVIEW AND ACTION

- [X] Substitution approved - Make submittals in accordance with Specification Section 01 3300.
- [ ] Substitution approved as noted - Make submittals in accordance with Specification Section 01 3300.
- [ ] Substitution rejected - Use specified materials.
- [ ] Substitution Request received too late - Use specified materials.

Signed by: Kelly Vetter Date: 2.26.2024

Additional Comments: ☐ Contractor ☐ Subcontractor ☐ Supplier ☐ Manufacturer ☐ A/E ☐ _____