JOHNSTON, IA
CONTRACT # TBD
PROJECT # 19 083702

EXISTING CONTOUR INTERVAL: 1'
PROPOSED CONTOUR INTERVAL: 0.1'

FLUME AND PIPE QUANTITIES:
FLUME = 352 L.F.
18" EQUIVALENT ARCH RCP = 46
18" EQUIVALENT ARCH RCP BENDS (22.5-DEGREE) = 3 EA
18" EQUIVALENT ARCH RCP FLARED END SECTION = 2 EA
BRIDGE INVERT REMOVAL AND REPARATION = 6

INSTALL 46 L.F. OF 18" EQUIVALENT ARCH RCP @ 0.30%
PROTECT LIGHT BASE
INSTALL 18" EQUIVALENT ARCH RCP F.E.S.
22.5-DEGREE BEND
INSTALL 34 L.F. OF FLUME AT 0.35% SLOPE
INSTALL 35.5 L.F. OF FLUME AT 0.35% SLOPE
INSTALL FLUME BELOW EXISTING SIDEWALK BRIDGE (REMOVE AND REPLACE INVERT)
EXISTING 6" SANITARY
INSTALL 70 L.F. OF FLUME AT 0.35% SLOPE
PROTECT TREE
INSTALL 87 L.F. OF FLUME AT 0.35% SLOPE
INSTALL 35 L.F. OF FLUME @ 0.30%
(2) UNDERGROUND CONNECTIONS
BLDG S52 NORTH WING
BLDG S52 SOUTH WING
BLDG S52
Found Pin
DOWNSPOUT
INSTALL 61.5 L.F. OF FLUME AT 0.35% SLOPE
INSTALL 28 L.F. OF FLUME AT 0.35% SLOPE
REMOVE AND REPLACE FLUME PANEL
SCALE: 1"=10'

ASK STUDIO

ARCHITECTS SCHIPPER KASTNER HOLD ALL RIGHTS OF COPYRIGHT TO THESE DRAWINGS. REPRODUCTIONS, ALTERATIONS, AMENDMENTS, USAGE OF INCORPORATION INTO OTHER DOCUMENTS MAY NOT OCCUR WITHOUT THE PRIOR WRITTEN PERMISSION OF ASK STUDIO.
COPYRIGHT 2018
ASK STUDIO

IAARNG BLDG S52 FLUME ADDITION

CONTRACT #: C24254033
PROJECT # 190866331
JOHNSTON, IOWA

ISSUE DATE: 8.10.2022
REVISIONS:

DRAINAGE FLUMES

C102
PROJECT 2203645

JOHNSTON, IA
CONTRACT #: TBD
PROJECT #19083702

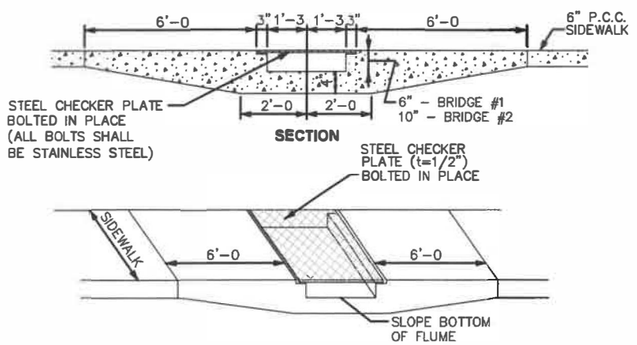

SIDEWALK BRIDGE DETAIL

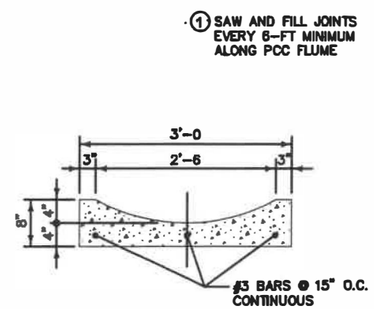

CONCRETE FLUME DETAIL

Item No.	Item Code	Item	Unit	Total
1	2010-D-1	TOPSOIL, ON-SITE	CY	311
2	2010-E	EXCAVATION, CLASS 10, WASTE	CY	121.0
3	4020-A-1	STROM SEWER, TRENCHED, EQUIVALENT ARCH, RCP, 18 IN.	LF	46
4	4030-B	PIPE APRON, EQUIVALENT ARCH, RCP, 18 IN.	EA	2
5	7010-A	CONCRETE FLUME	SY	118
6	7030-A	REMOVAL OF FLUME	SY	10
7	ESTIMATE REF.	REMOVE AND REPLACE SIDEWALK BRIDGE INVERT	EA	6
8	9010-B	HYDRAULIC SEEDING, SEEDING, FERTILIZING, AND MULCHING	AC	0.3
9	9040-D-1	FILTER SOCKS, 12 IN.	LF	800.0
10	11,020-A	MOBILIZATION	LS	1

ESTIMATED REFERENCE INFORMATION

Item no.	Item Code	Description
1	2010-D-1	TOPSOIL, ON-SITE CONTRACTOR SHALL STRIP, SALVAGE, AND RESPREAD EXISTING TOPSOIL IN ALL DISTURBED AREAS TO A DEPTH OF 8". THIS BID ITEM IS FOR FOR AREAS OUTSIDE OF FLUME CUT.
2	2010-E	EXCAVATION, CLASS 10, WASTE CONTRACTOR SHALL WASTE EXCESS SOIL GENERATED BY CONSTRUCTION OF FLUME.
3 4	4020-A-1 4030-B	STORM SEWER, TRENCHED, EQUIVALENT ARCH, RCP, 18 IN. PIPE APRON, EQUIVALENT ARCH, RCP, 18 IN. REFER TO C102 FOR STORM LOCATION.
5	7010-A	CONCRETE FLUME REFER TO C102 FOR FLUME CONSTRUCTION LOCATION. SEE FLUME DETAIL ABOVE.
6	7030-A	REMOVAL OF FLUME REFER TO C102 FOR LOCATION.
7	ESTIMATE REF.	REMOVE AND REPLACE SIDEWALK BRIDGE INVERT SEE SIDEWALK BRIDGE DETAIL ABOVE. REFER TO C102 FOR LOCATIONS.
8	9010-B	HYDRAULIC SEEDING, SEEDING, FERTILIZING, AND MULCHING CONTRACTOR SHALL SEED ALL DISTURBED AREAS.
9	9040-D-1	FILTER SOCKS, 12 IN. REFER TO C101 FOR INITIAL PLACEMENT LOCATION.
10	11,020-A	MOBILIZATION MEASUREMENT AND PAYMENT SHALL BE "LUMP SUM" FOR ALL MOBILIZATION WORK.

ASK STUDIO

ARCHITECTS SCHIPPER EASTNER HOLD ALL RIGHTS OF COPYRIGHT TO THESE DRAWINGS. REPRODUCTIONS, ALTERATIONS, MODIFICATIONS, USAGE OR INCORPORATION INTO OTHER DOCUMENTS MAY NOT OCCUR WITHOUT THE PRIOR WRITTEN PERMISSION OF ASK STUDIO.
COPYRIGHT 2018 ASK STUDIO

IAARNG BLDG S52 FLUME ADDITION
CONTRACT #: C24254033
PROJECT # 190866331
JOHNSTON, IOWA

ISSUE DATE: 8.10.2022
REVISIONS:

TYPICAL SECTIONS

C103
PROJECT 2203645