LOCATION MAP
GRUNDY COUNTY

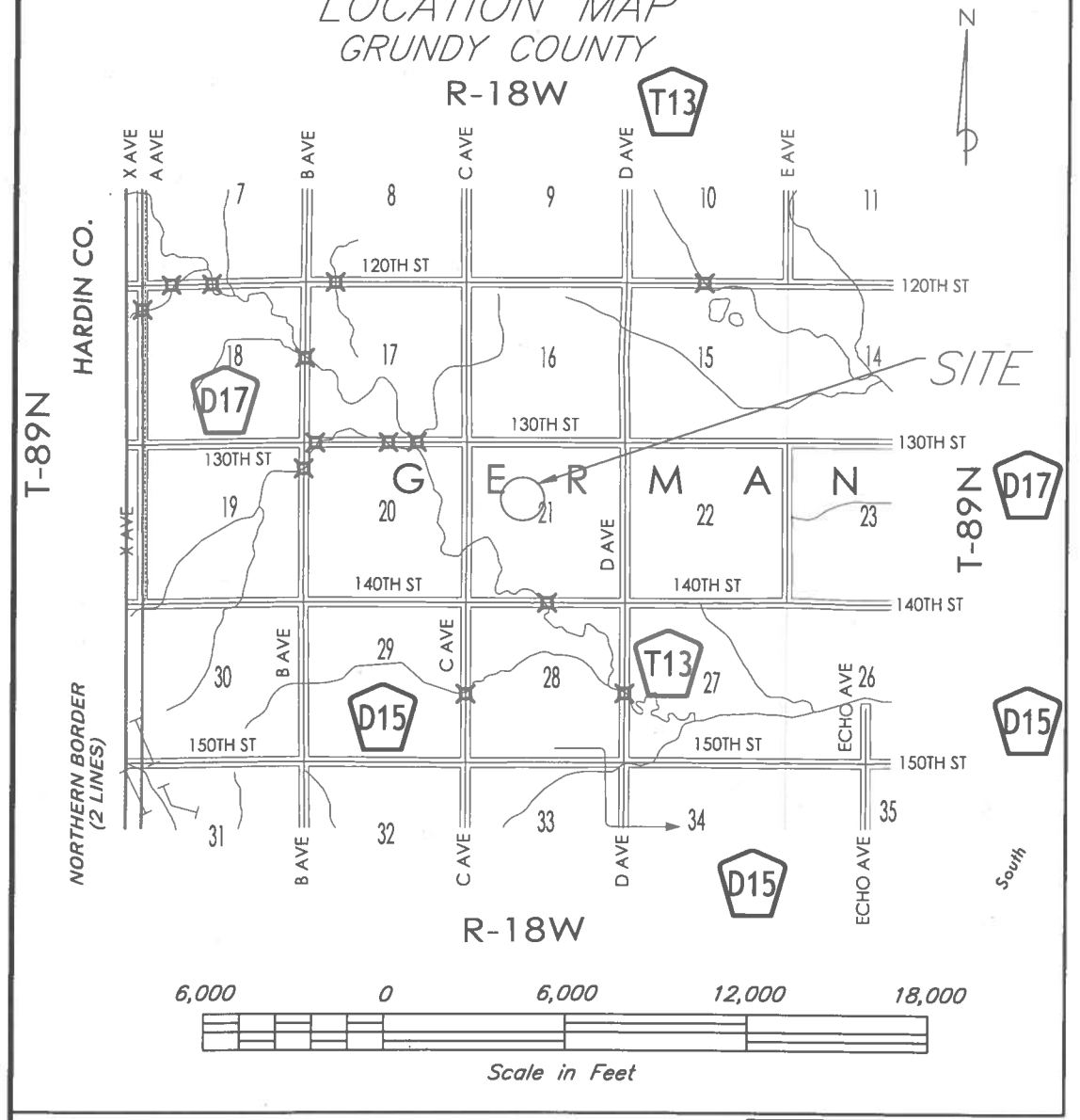

ENGINEERING JOB CLASS IV

Contractor is required to follow Iowa One Call law. IowaOneCall.com or Call 811
Ticket # _____

NRCS Contact for Questions:	Jeff A. Lutz, Engineering Tech.
NRCS Contact Phone:	319-349-5380
Landowner Contact:	Jim McDowell
Landowner Contact Phone:	641-485-4200

I have reviewed and agree with the content of the plans and specifications prepared by the NRCS.

Landowner: _____ Date: _____

I certify that this practice has been constructed in accordance with the plans and specifications.

Contractor: _____ Date: _____

NRCS Rep.: _____ Date: _____

BENCH MARK

NO.	ELEV.	DESCRIPTION
TBM 1	1033.19	Top of steel rerod with yellow 'NRCS survey' cap located along property line fence on east end of planned South dike.
TBM 2	1025.55	Top of steel rerod with yellow 'NRCS survey' cap located along property line fence South of South dike approximately 300 feet.

NRCS does not guarantee that this structure will fill and/or remain filled with water to the principal spillway crest elevation.

If a cultural resource is identified during construction, stop immediately and notify the local Natural Resources Conservation Service office.

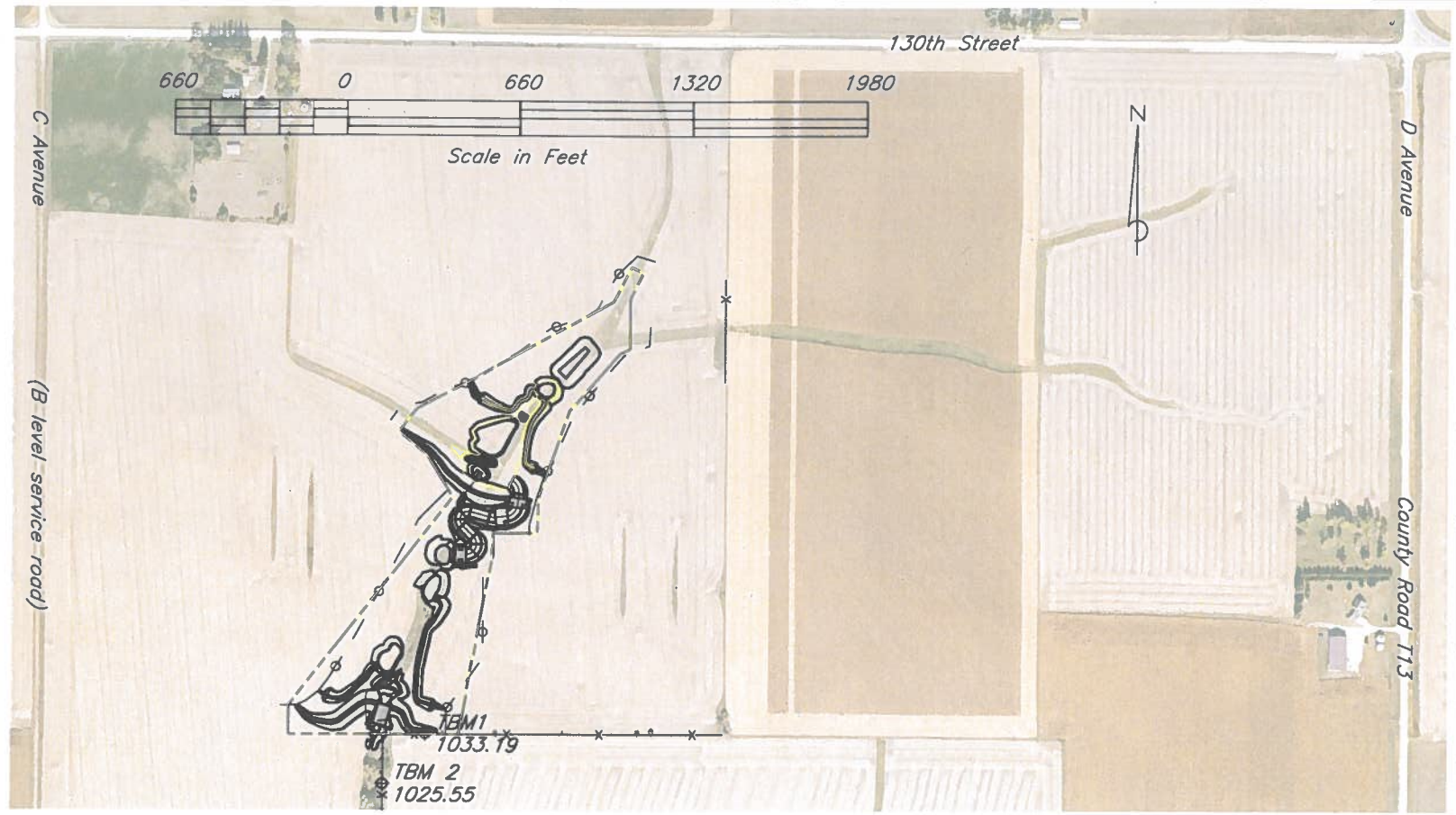

PLAN CONTENTS

COVER SHEET & LOCATION MAP	Sheet 1
MATERIALS LIST	Sheet 2
SITE PLAN NORTH	Sheet 3
SITE PLAN SOUTH	Sheet 4
PROFILES flow thru CL TCBM chutes	Sheet 5
PROFILE NORTH DIKE & NORTH WATER CONTROL STRUCTURE	Sheet 6
PROFILE SOUTH DIKE & SOUTH WATER CONTROL STRUCTURE	Sheet 7
PROFILE DETAILED NORTH DIKE & NORTH WATER CONTROL STRUCTURE	Sheet 8
PROFILE DETAILED SOUTH DIKE & SOUTH WATER CONTROL STRUCTURE	Sheet 9
IA STD DWG 1530 INLINE WATER CONTROL STRUCTURE	Sheet 10
POLYETHYLENE SHEET ANTISEEP COLLAR IL STD DWG 215	Sheet 11
TIED CONCRETE BLOCK MAT CHUTE #1 DETAILS	Sheet 12
PROFILE DETAIL SECTION TCBM CHUTE #1	Sheet 13
TIED CONCRETE BLOCK MAT CHUTE #2 DETAILS	Sheet 14
PROFILE DETAIL SECTION TCBM CHUTE #2	Sheet 15
TIED CONCRETE BLOCK MAT CHUTE #3 DETAILS	Sheet 16
PROFILE DETAIL SECTION TCBM CHUTE #3	Sheet 17
TIED CONCRETE BLOCK MAT CHUTE #4	Sheet 18
PROFILE DETAIL SECTION TCBM #4	Sheet 19
PROFILE & CROSS SECTIONS NORTH OUTLET CHANNEL TO SOUTH POOL	Sheet 20
CROSS SECTIONS NORTH OUTLET CHANNEL TO SOUTH POOL	Sheet 21
CROSS SECTIONS NORTH OUTLET CHANNEL TO SOUTH POOL	Sheet 22
CROSS SECTIONS OUTLET CHANNEL TCBM CHUTE #4	Sheet 23
modified IA STD DWG 1507 TRAPEZOIDAL ROCK CHECK DETAIL	Sheet 24
IA STD DWG 1521 Manufactured Mulch Blanket for Trapezoidal Waterways	Sheet 25
PROFILES NORTH INTERCEPTION LINE 1 WEST & subMAIN 1a	Sheet 26
PROFILES NORTH INTERCEPTION LINE 2 EAST & subMAIN 2b	Sheet 27
PROFILES SOUTH INTERCEPTION LINE 3 WEST & subMAIN 3c	Sheet 28
PROFILES SOUTH INTERCEPTION LINE 4 EAST & subMAIN 4d	Sheet 29

Construction Specifications

List of Specifications

IA-5	Pollution Control	
IA-6	Seeding and Mulching (attached)	
	SEEDING PLAN – CRITICAL SEEDING AREA STRUCTURAL	Sheet 1
	SEEDING PLAN – HYDRIC MIX	Sheet 2
	SEEDING PLAN – WETLAND BUFFER	Sheet 3
	PLAN VIEW SEEDINGS	Sheet 4

IA-9, IA-21, IA-23, IA-24, IA-45, IA-46, IA-61, IA-95

	Date
Designed Jeff A. Lutz	9/2025
Drawn Jeff A. Lutz	1/2026
Checked NAK	2/9/2026
Approved: Amy Kuhl, AE2118128	

Jim McDowell t8559
Constructed Wetland for nitrate reduction day-lighted tile
COVER SHEET LOCATION MAP
NW¼ sec. 21 T.89N.-R.18W. German twp. Grundy County, Iowa

USDA United States Department of Agriculture Natural Resources Conservation Service

File No. Jim McDowell t8559 constructed wetland GRUNDY.dwg

Drawing No.

Sheet 1 of 29

MATERIALS LIST

Earthwork

fore bay North pool excavation – CUT 2253 cubic yards (see sheets 3 & 5)
Shallow Water Excavation day-lighted tile outlet channels – CUT 1245 cubic yards (see sheets 3, 5, 26, & 27)
North shallow water excavation – CUT 1388 cubic yards (see sheets 3, & 6)
deep North shallow water excavation – CUT 170 cubic yards (see sheets 3, 6, & 8)
North dike and outlet channel excavation – CUT 2412 cubic yards (see sheets 3, 4, 5, 6, 8, & 20)
excavation outlet channel from North WCS – CUT 4 cubic yard (see sheets 8 & 20)
Shallow Water Excavation 2 South pool (East) outlet channel – CUT 1852 cubic yards (see sheets 4 & 29)
Shallow Water Excavation 1 South pool (West) outlet channel – CUT 1262 cubic yards (see sheets 4 & 28)
South dike and TCBM chute plus outlet channel – CUT 975 cubic yards (see sheets 4, 5, 7, & 9)

} TOTAL CUT yardage 11,561 cubic yards

submergent habitat mound 1 North pool – FILL 6 cubic yards (see sheets 3 & 5)
mounding over day-lighted tile North west line – FILL 51 cubic yards (see sheets 3 & 26)
mounding over day-lighted tile North east line – FILL 21 cubic yards (see sheets 3 & 27)
submergent habitat mound 2 North pool – FILL 68 cubic yards (see sheets 3 & 6)
North dike and outlet channel diversion ridges – FILL 4268 cubic yards (see sheets 3, 6, 8, 20, & 21)
mounding over conduit from North water control structure – FILL 44 cubic yards (see sheets 3, 6, & 20)
mounding over day-lighted South east line – FILL 10 cubic yards (see sheets 4 & 29)
South dike and TCBM chute – FILL 5088 cubic yards (see sheets 4, 5, 7, & 9)

} TOTAL FILL yardage 9,556 cubic yards

North dike core trench – CUT 628 cubic yards (see sheets 6, 8, 20, & 21)
South dike MAIN core trench – CUT 428 cubic yards (see sheets 7, & 9)
South dike west core trench – CUT 251 cubic yards (see sheet 7)
South dike east core trench – CUT 132 cubic yards (see sheet 7)
stripping (under foot-print North dike & diversion dikes) – CUT 806 cubic yards (see sheets 6, 8, 20, 21, 22, &23)
stripping (under foot-print South dike & TCBM chute) – CUT 685 cubic yards (see sheets 5, 7, & 9)
stripping (under foot-print submergent habitat mound 2 North pool) – CUT 60 cubic yards (see sheet 6)
stripping (under foot-print mounding North tile east side) – CUT 15 cubic yards (see sheet 27)
stripping (under foot-print mounding North tile west side) – CUT 30 cubic yards (see sheet 26)
stripping (under foot-print mounding South tile east side) – CUT 10 cubic yards (see sheet 29)

} TOTAL CUT yardage 3,045 cubic yards

Seeding & Mulching 14.5 acres (see Lists of Specifications; IA-6 Seeding and Mulching attached sheets 1, 2, 3, & 4)

Subsurface Drains

30 feet – 15" dual-wall HDPE plastic pipe, non-perforated (see sheet 27)
650 feet – 15" corrugated HDPE plastic tubing, perforated (see sheet 27)
60 feet – 12" dual-wall HDPE plastic pipe, non-perforated (see sheet 26)
960 feet – 12" corrugated HDPE plastic tubing, perforated (see sheet 26)
480 feet – 8" corrugated HDPE plastic tubing, perforated (see sheet 29)
1060 feet – 6" corrugated HDPE plastic tubing, perforated (see sheet 26, & 28)
710 feet – 5" corrugated HDPE plastic tubing, perforated (see sheet 26, 27, & 28)
280 feet – 4" corrugated HDPE plastic tubing, perforated (see sheet 27 & 29)
20 feet – 18" Corrugated Metal Pipe galvanized with rodent guard (see sheet 27)
20 feet – 15" Corrugated Metal Pipe galvanized with rodent guard (see sheet 26)
20 feet – 10" Corrugated Metal Pipe galvanized with rodent guard (see sheet 29)
20 feet – 8" Corrugated Metal Pipe galvanized with rodent guard (see sheet 28)

Principal Spillways [four Tied Concrete Block Mat chutes] (see sheets 3, 4, 5, 6, 9, 12, 13, 14, 15, 16, 17, 18, 19, & 23)

14,800 square feet – tied concrete block mats (thirteen 50'x12', four 50'x10', four 40'x12', two 40'x10, five 38'x12)
2080 square feet – underlayment seam material (five 40'x2' pieces, five 50'x2' pieces, four 85'x2' pieces)
603 number – 18" rebar 'U' #3 rebar anchors
12,872 square feet – seeding under TCBM chutes (0.30 acre)

Water Level Control Structures & Conduits (see sheets 3, 4, 6, 7, 8, 9, 10, & 11)

2 number – water control structures first 20"x24" box 8' height with 15" stubs pipe size and second 24"x28" box 10' height with 18" stubs pipe size
160 feet – 15" PVC schedule 40 pipe with trash guard (inlet) and rodent guard (outlet) plus one 45° elbow 15" PVC schedule 40 pipe
244 feet – 18" PVC schedule 40 pipe with trash guard (inlet) and rodent guard (outlet) plus two 45° elbow 18" and one 22.5° elbow 18" PVC schedule 40 pipe
2 number – 72"x72" polyethlene sheet antiseep collar (see sheets 6, 7, 8, 9, & 11)
115 square yards – class 3 geotextile (place under bedding)
18 tons – ¾" gravel bedding, clean
108 tons – 12" to 8" size rock riprap
7 feet – 30" dual-wall HDPE pipe (placed over north WCS and filled with gravel)
9 feet – 36" dual-wall HDPE pipe (placed over south WCS and filled with gravel)

Structure Components for channel between pools for outlet channel and around TCBM chutes 1 & 2

416 feet length of 24" deep by 24" wide trench for rock check placement; CUT – 62 cubic yards (see sheets 4, 6, 20, 23, & 24)
278 square yards – class 3 geotextile (placed lining rock checks)
99 tons – 4" to 8" rock size for 8 rock checks (see sheet 24)
2400 square yards – manufactured mulch blanket; 16' x 562.5' roll size
6900 staples – 6" U-staple or round top-single stem staples (see sheet 25)
183 feet – length 12" x 12" trenches to bury leading edge MMB (see sheets 20, 23, & 25)

Date
Designed Jeff A. Lutz 9/2025
Drawn Jeff A. Lutz 1/2026
Checked NAK 2/7/2026
Approved

Jim McDowell t8559
Constructed Wetland for nitrate reduction day-lighted tile
MATERIALS LIST
NW¼ sec. 21 T.89N.–R.18W. German twp. Grundy County, Iowa

United States Department of Agriculture
Natural Resources Conservation Service

File No. Jim McDowell t8559 constructed
Drawing No. GRUNDY.dwg

N

bottom shallow water excavation elevation 1033.5

normal pool elevation 1036.0
1.47 acres

North interception line 1 west

easement area 17.42 acres

outlet channel for day-lighted tile

mounding

subMain 1a North
interception line southwest

100-yr. storm top of dike
elevation 1040.9; area 7.60 acres

bottom fore bay elevation 1032.5

normal pool elevation 1036.0
0.28 acre

outlet

bottom swe
elevation 1034.0

North interception line 2 east

submergent habitat mound 2
top elevation 1035.5

outlet channel for day-lighted tile

top dike elevation 1040.9

mounding

bottom deep swe
elevation 1032.5

inlet

water control structure

outlet

72" x 72" anti-seep collar

spillway crest (40' x 30') elevation 1037.0

mound over conduit below WCS

subMain 2b North interception line south

Tied Concrete Block Mat chute #2

Tied Concret Block Mat chute #1

rock check

outlet

diversion dike

diversion dike

MMB

100 0 100 200 300

Scale in Feet

	Date
Designed Jeff A. Lutz	7/2025
Drawn Jeff A. Lutz	1/2026
Checked NAK	2/9/2026
Approved	

Jim McDowell t8559
CONSTRUCTED WETLAND

SITE PLAN NORTH

NW¼ sec. 21 T.89N.-R.18W. German twp. Grundy County, IA

United States Department of Agriculture

Natural Resources Conservation Service

File No.
Jim McDowell
t8559
constructed
Drawing No.
Grundy.dwg

Sheet 3 of 29

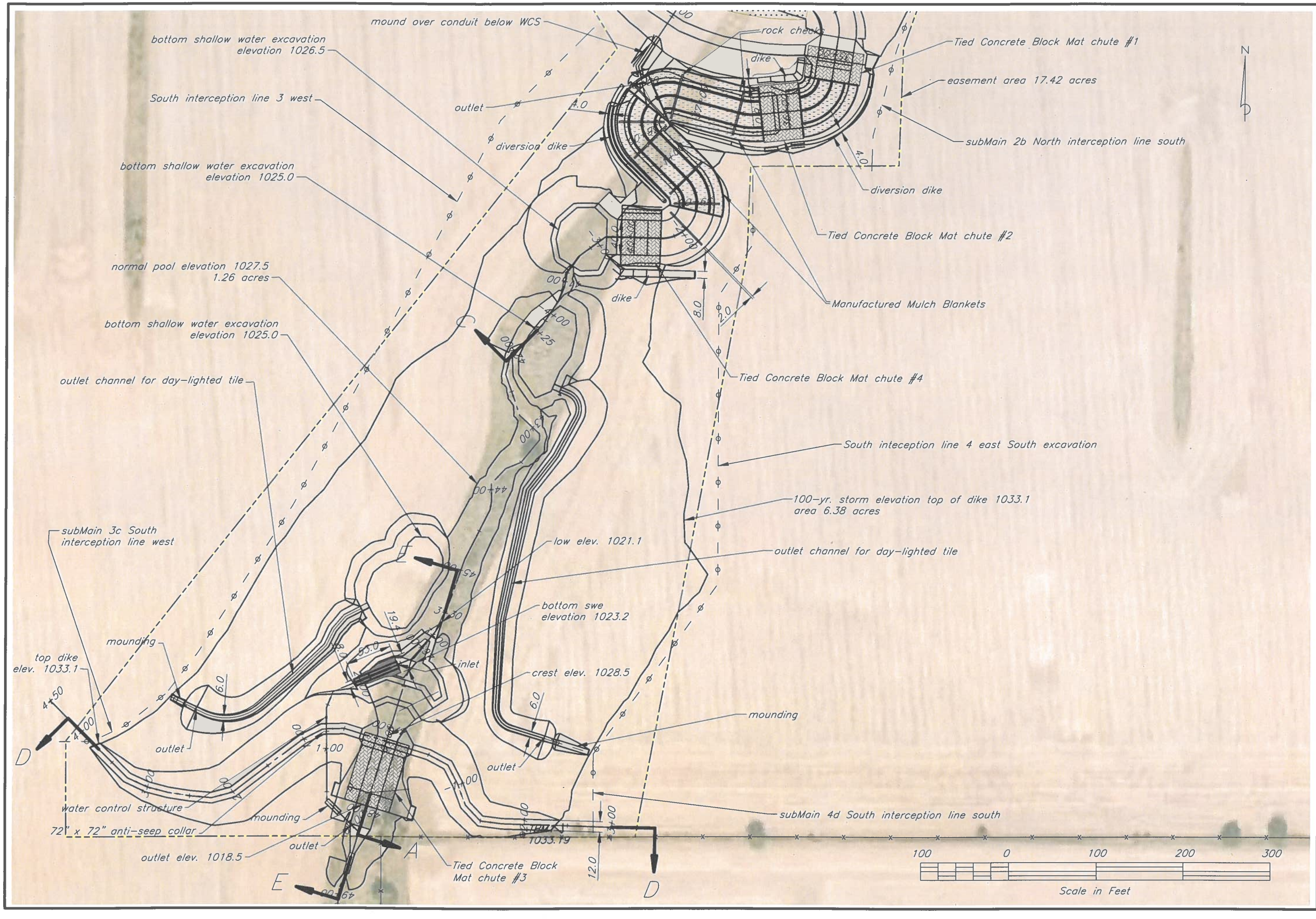

	Date
Designed Jeff A. Lutz	7/2025
Drawn Jeff A. Lutz	7/2025
Checked NJK	2/1/2026
Approved ###	###

Jim McDowell t8559
CONSTRUCTED WETLAND
SITE PLAN SOUTH

German twp. Grundy County, Iowa

NW¼ sec. 21 T.89N.-R.18W.

United States Department of Agriculture
USDA
Natural Resources Conservation Service

File No. Jim McDowell t8559 constructed wetland
Drawing No. GRUNDY.dwg

Sheet 4 of 29

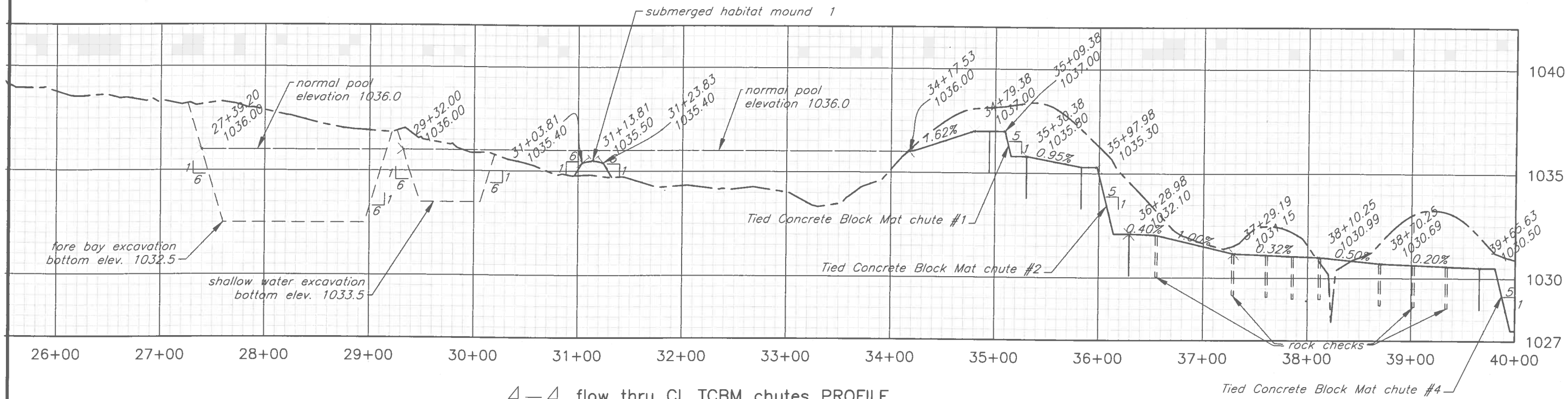

A—A flow thru CL TCBM chutes PROFILE

A—A flow thru CL TCBM chutes PROFILE

		Date
Designed	Jeff A. Lutz	9/2025
Drawn	Jeff A. Lutz	1/2026
Checked	NAK	1/9/2026
Approved		

Jim McDowell t8559
Constructed Wetland
PROFILES flow thru CL TCBM chutes
NW¼ sec. 21 T.89N.–R.18W. German twp.
Grundy County, Iowa

USDA United States Department of Agriculture
Natural Resources Conservation Service

File No. Jim McDowell t8559 constructed
Drawing No. GRUNDY.dwg

Sheet 5 of .

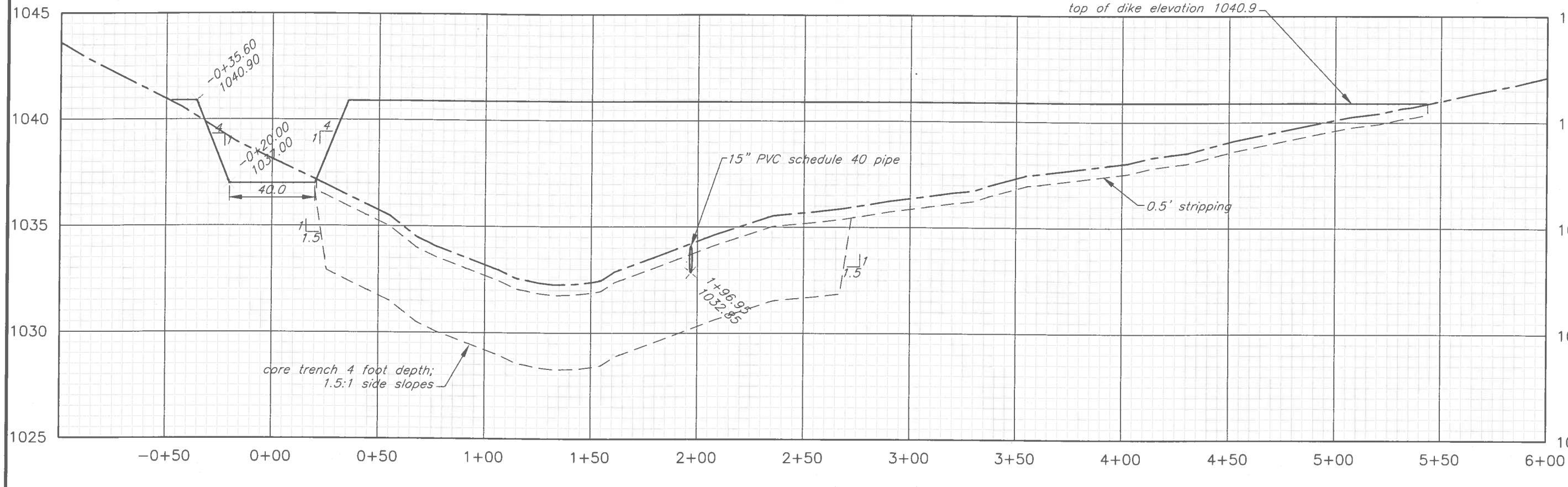

B—B CL North dike PROFILE

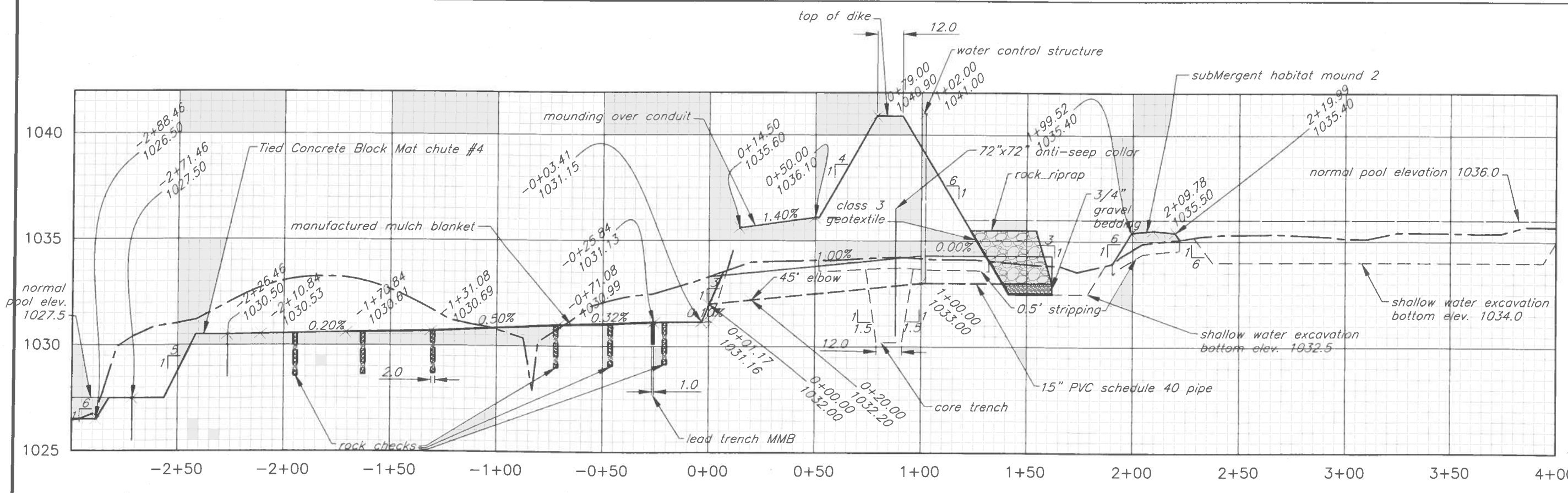

C—C conduit North WCS PROFILE

Date
Designed Jeff A. Lutz 9/2025
Drawn Jeff A. Lutz 1/2026
Checked NJAK 2/9/2026
Approved

Jim McDowell t8559
Constructed Wetland
PROFILE NORTH DIKE & NORTH WATER CONTROL STRUCTURE
NW¼ sec. 21 T.89N.–R.18W. German twp. Grundy County, Iowa

United States Department of Agriculture
Natural Resources Conservation Service

File No.
Jim McDowell t8559 constructed wetland GRUNDY.dwg

Sheet 6 of 29

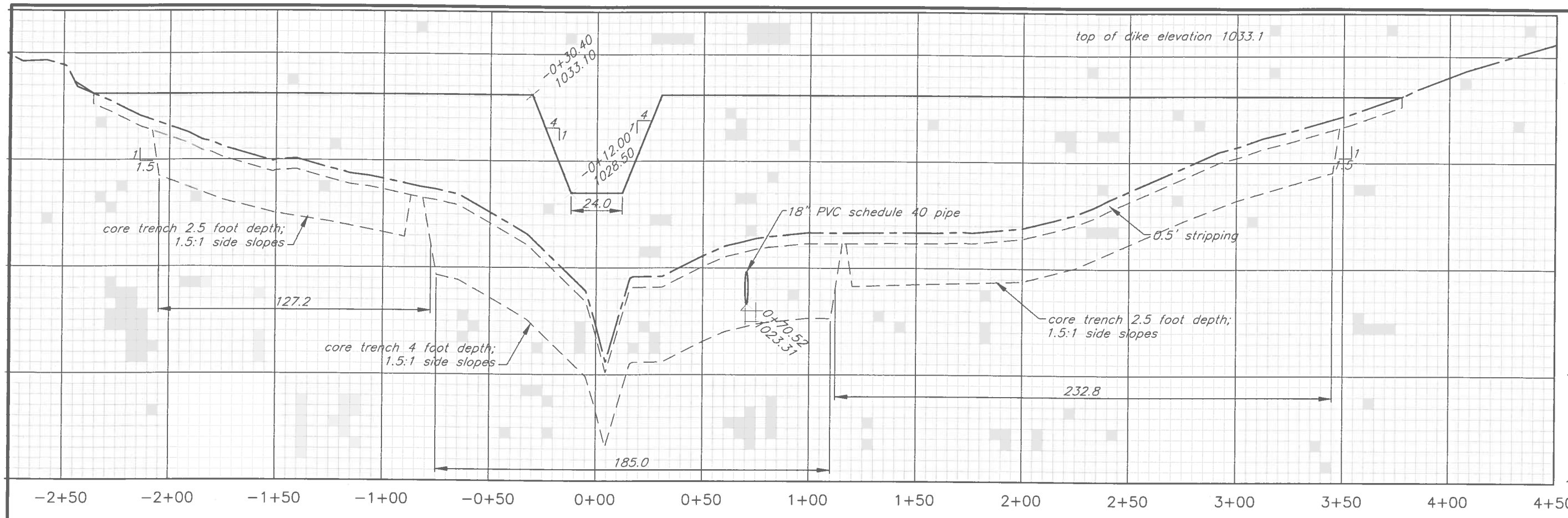

D–D CL South dike PROFILE

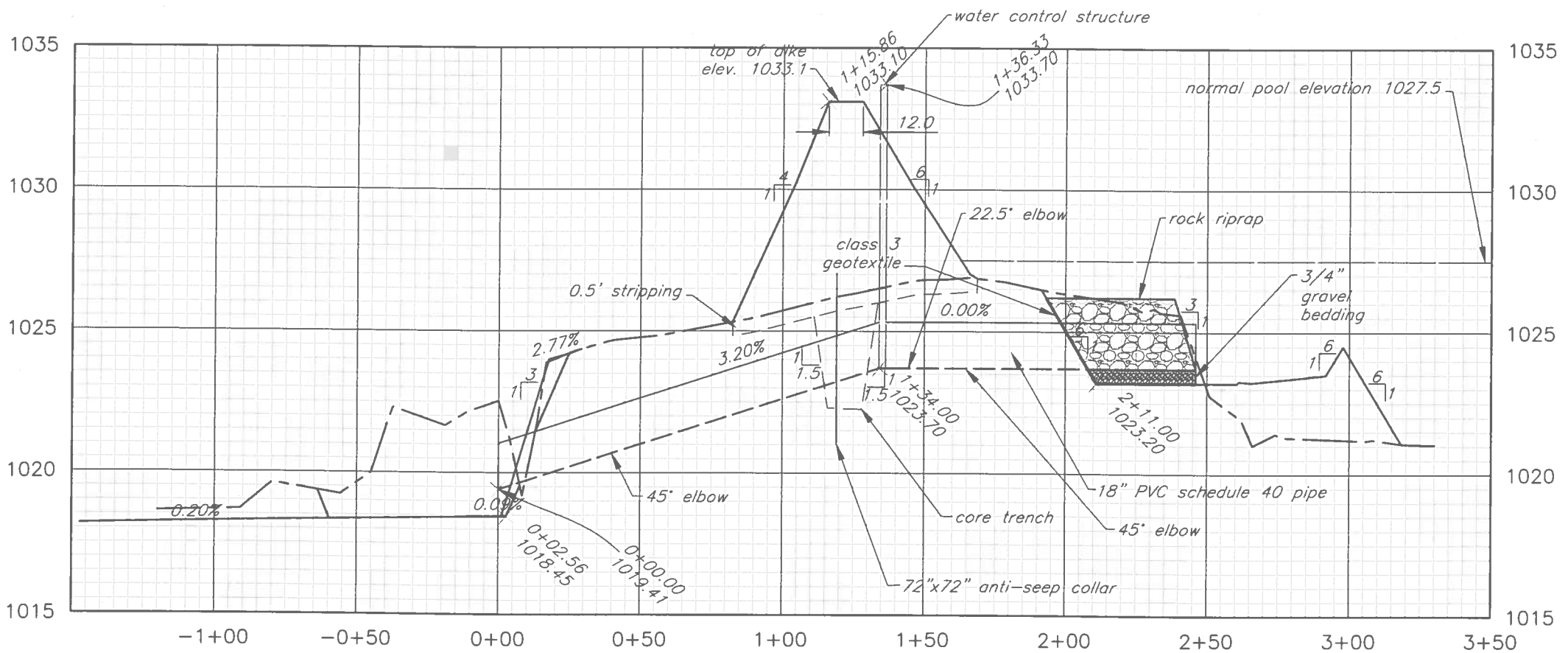

E–E conduit South WCS PROFILE

Date
Designed Jeff A. Lutz 9/2025
Drawn Jeff A. Lutz 1/2026
Checked NAK 2/5/2026
Approved

Jim McDowell t8559
Constructed Wetland
PROFILE SOUTH DIKE & SOUTH WATER CONTROL STRUCTURE
NW¼ sec. 21 T.89N.–R.18W. German twp. Grundy County, Iowa

United States Department of Agriculture
Natural Resources Conservation Service

File No. Jim McDowell t8559 constructed wetland GRUNDY.dwg

Drawing No.

Sheet 7 of 29

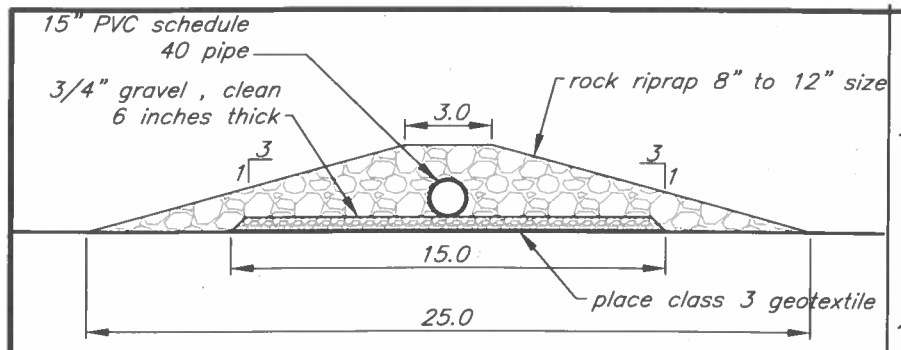

20 feet – 15 inch PVC schedule 40 pipe with 6 rows of 1–inch holes 6 inches apart starting at 1' minimum from pipe ends. Stagger holes as shown below.

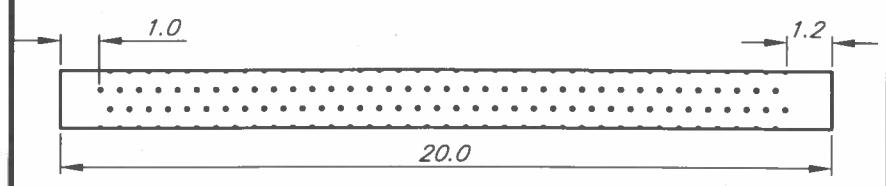

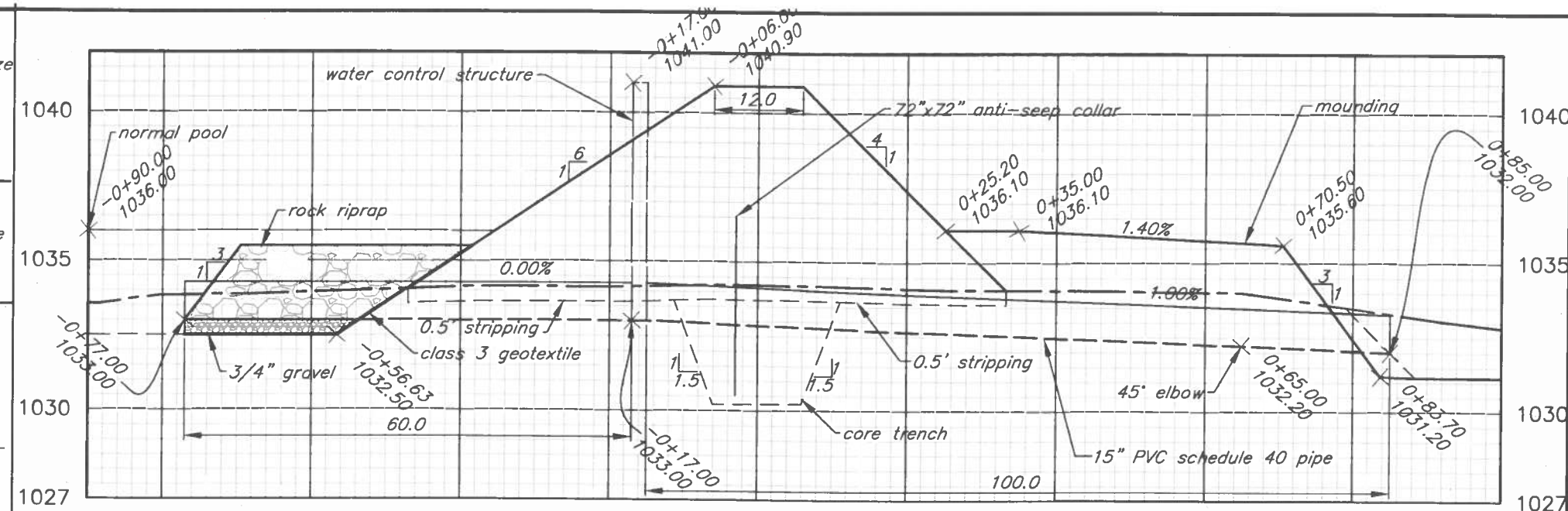

F–F conduit North WCS PROFILE

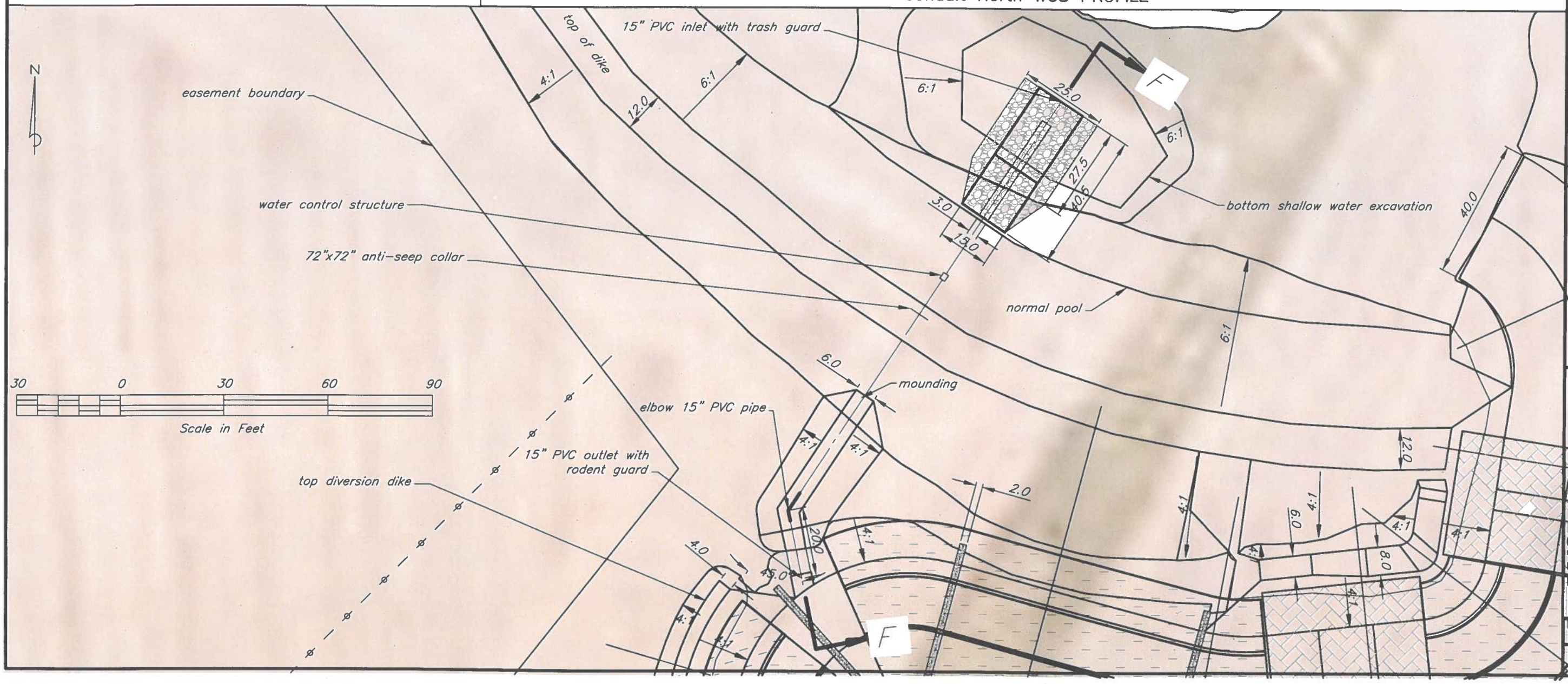

PROFILE DETAILED NORTH DIKE & NORTH WCS
Constructed Wetland
Jim McDowell t8559
NW¼ sec. 21 T.89N.–R.18W. German twp. Grundy County, IA

	Date
Designed Jeff A. Lutz	9/2025
Drawn Jeff A. Lutz	1/2026
Checked NAK	2/5/2026
Approved	

United States Department of Agriculture
Natural Resources Conservation Service

File No. Jim McDowell t8559 constructed
Drawing No. 2025 Grundy.dwg

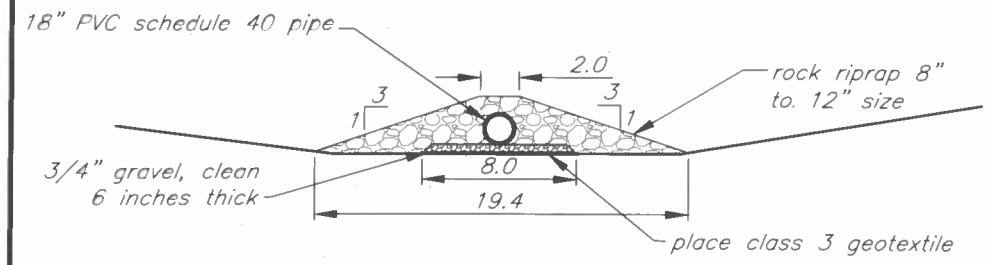

20 feet – 18 inch PVC schedule 40 pipe with 6 rows of 1–inch holes 6 inches apart starting at 1' minimum from pipe ends. Stagger holes as shown below.

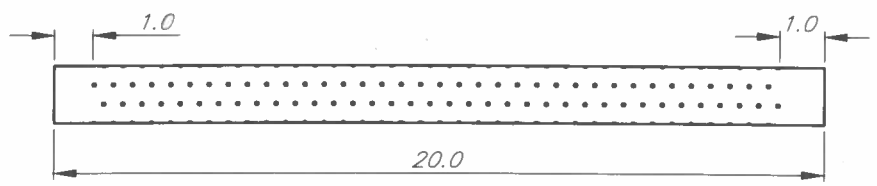

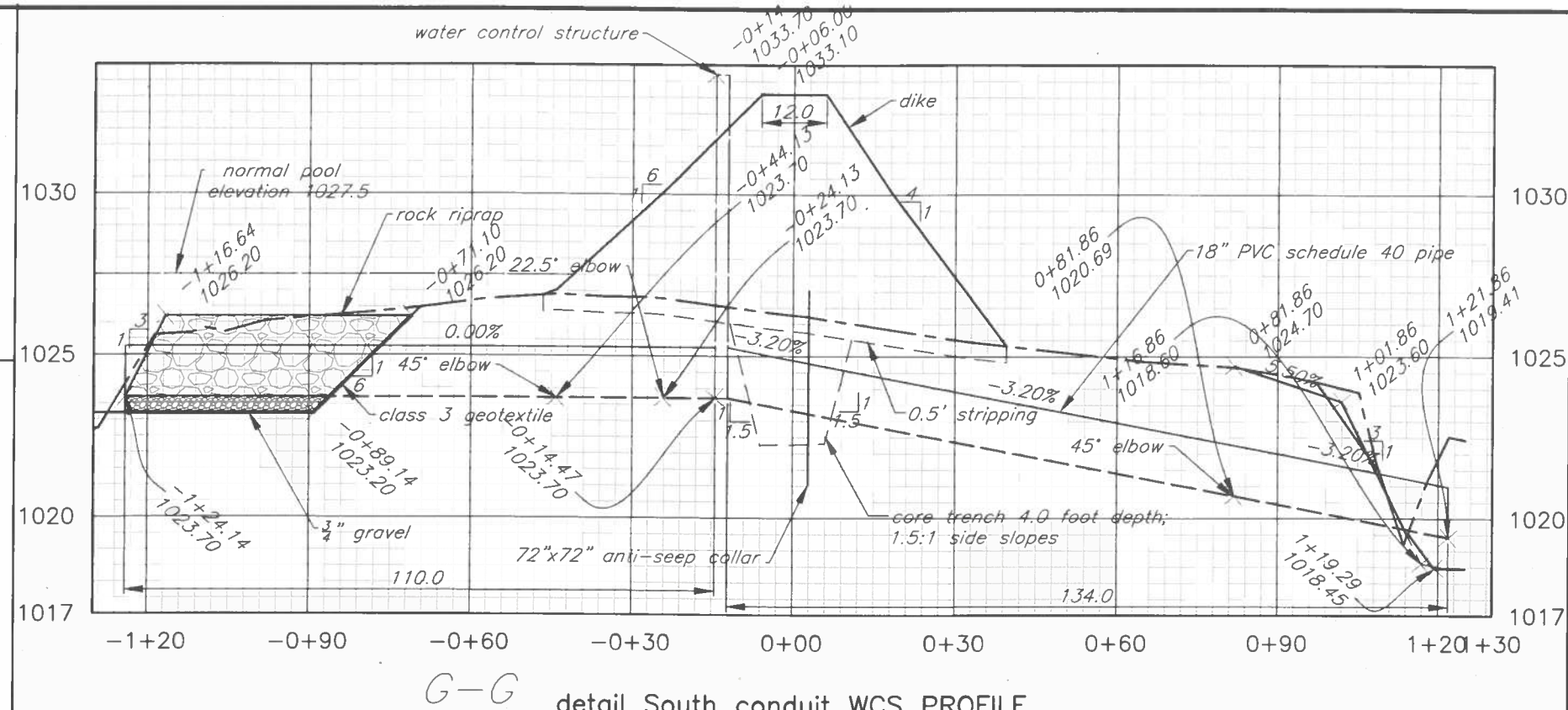

G–G detail South conduit WCS PROFILE

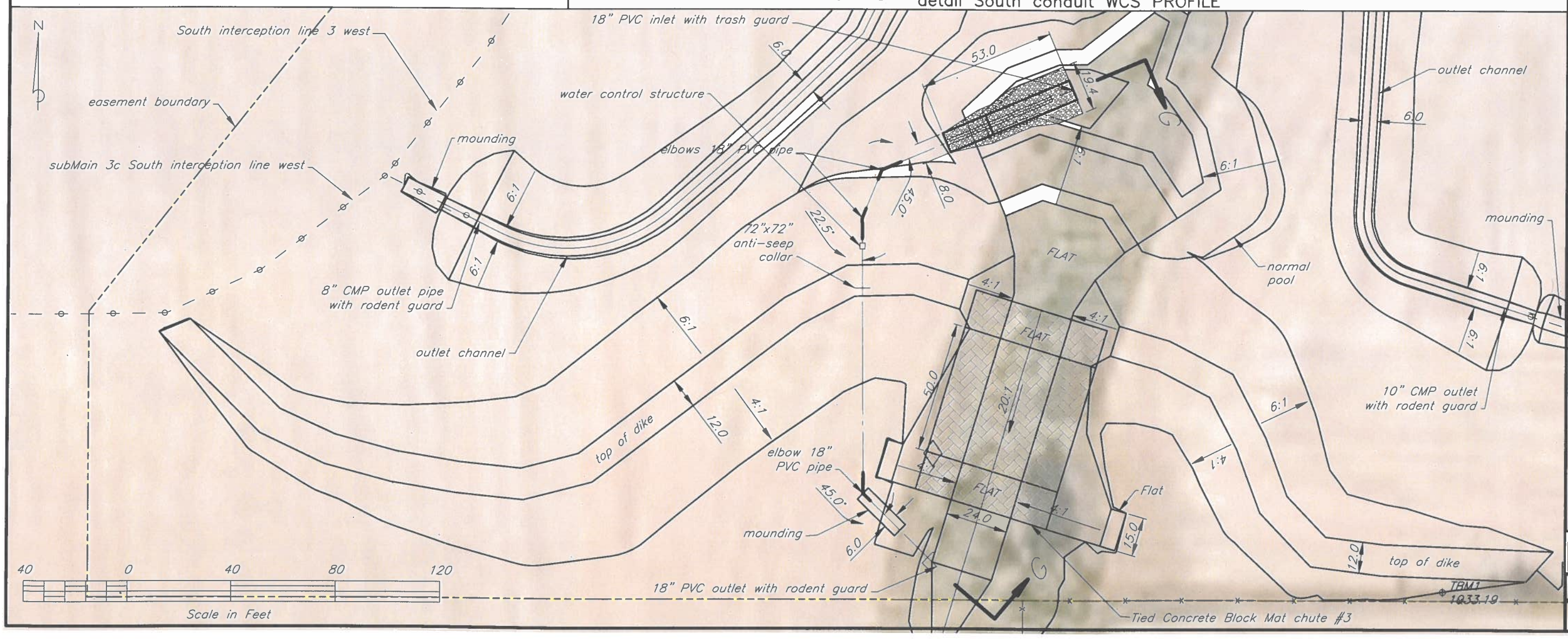

Jim McDowell t8559
Constructed Wetland

PROFILE DETAILED SOUTH DIKE & SOUTH WATER CONTROL STRUCTURE

NW¼ sec. 21 T.89N.–R.18W. German twp. Grundy County, Iowa

		Date
Designed	Jeff A. Lutz	6/2025
Drawn	Jeff A. Lutz	1/2026
Checked	NAK	2/5/2026
Approved		

United States Department of Agriculture
USDA
Natural Resources Conservation Service

File No. Jim McDowell t8559 constructed
Drawing No. GRUNDY.dwg
Sheet 9 of 29

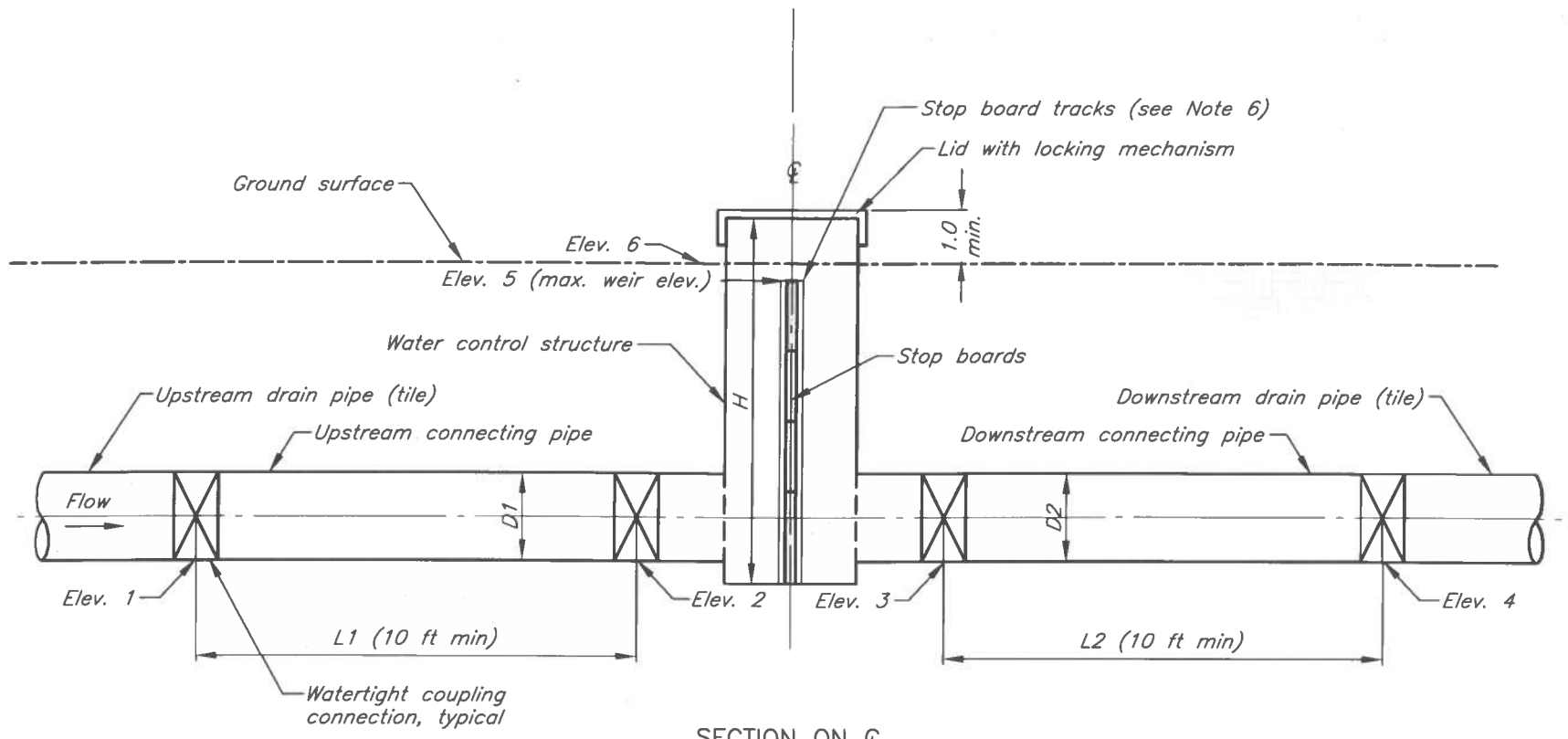

SECTION ON ℄

NOTES:

1. Water Control Structure (WCS) materials and installation shall be in conformance with Iowa NRCS Construction Specification (CS) IA–45, Plastic (PVC, PE) Pipe.
2. Connecting pipe materials and installation shall be in conformance with CS IA–45; IA–46, Tile Drains For Land Drainage; IA–51, Corrugated Metal Pipe Conduits; or IA–52, Steel Pipe Conduits.
3. WCS shall be fabricated of PVC with integral upstream and downstream water–tight coupling connections, corrosion–resistant stop boards, aluminum extrusions and stainless steel fasteners and appurtenances. Acceptable models include Agri Drain, Nyloplast, or approved equal.
4. WCS shall provide flow capacity equal to or greater than that of adjacent pipe under expected flow conditions.
5. Stop boards shall provide a water–tight seal under 4 ft of pressure head (min.).
6. In situations where water levels higher than maximum design elevation would impact neighboring properties or other aspects of the site design, consider a custom–order box which limits extent of stop board tracks to the maximum design weir elevation.
7. Stop board removal tool shall be provided.
8. As an alternative to a stop board straight weir structure, a circular inner standpipe may be provided which meets the design flow requirements, with approval of the engineer (Nyloplast Standpipe WCS or equal). Maximum weir elevation shall be set at Elev. 5.
9. All connections shall be water–tight.
10. Structure lid shall be provided with locking mechanism.
11. Backfill around the WCS shall meet the requirements of CS IA–45. Normal stop board operation shall be verified following backfill.
12. Mark location of each structure using post or manufactured marker flag for safety in the field.

Structure Materials and Dimensions

Water Control Structure				Connecting Pipe (Non–perforated)						U/S Drain Pipe		D/S Drain Pipe	
ID	H (ft)	Width/Dia (in)	Design Flow (cfs)	L1 (ft)	U/S Connecting Pipe Material	D1 (in)	L2 (ft)	D/S Connecting Pipe Material	D2 (in)	Dia. (in)	Material	Dia. (in)	Material
1 north	8'	20" x 24"	3.7	60'	PVC schedule 40	15"	100'	PVC schedule 40	15"	--	-----	--	-----
2 south	10'	24" x 28"	4.4	110'	PVC schedule 40	18"	134'	PVC schedule 40	18"	--	-----	--	-----

Elevation Table

WCS ID	Elev. 1	Elev. 2	Elev. 3	Elev. 4	Elev. 5	*	Elev. 6
1 north	1033.0	1033.0	1033.0	1032.00	1036.0		1039.4
2 south	1023.7	1023.7	1023.7	1019.41	1027.5		1032.0

* Check box if stop board tracks must be limited to Elev. 5

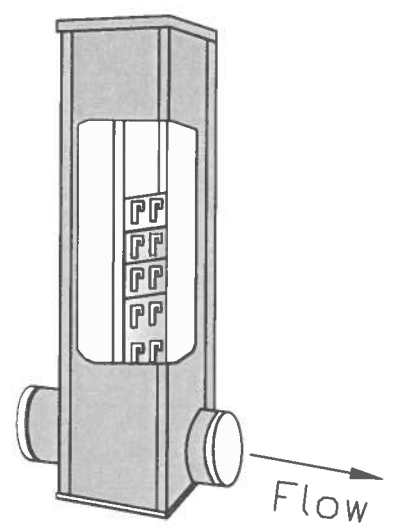

WATER CONTROL STRUCTURE
ISOMETRIC VIEW

NOT TO SCALE

STANDARD DWG. IA–1530

DATE Jan. 2017 | PAGE 1 OF 1

Designed Jeff A. Lutz 7/2025
Drawn Jeff A. Lutz 1/2026
Checked NAK 25/2026
Approved

INLINE WATER CONTROL STRUCTURE

Jim McDowell t8559 constructed wetland

Grundy County, Iowa

NW¼ sec. 21 T.89N.–R.18W. German twp.

United States Department of Agriculture
Natural Resources Conservation Service

File No. IA1530.dwg

Drawing No. ----

Sheet 10 of 29

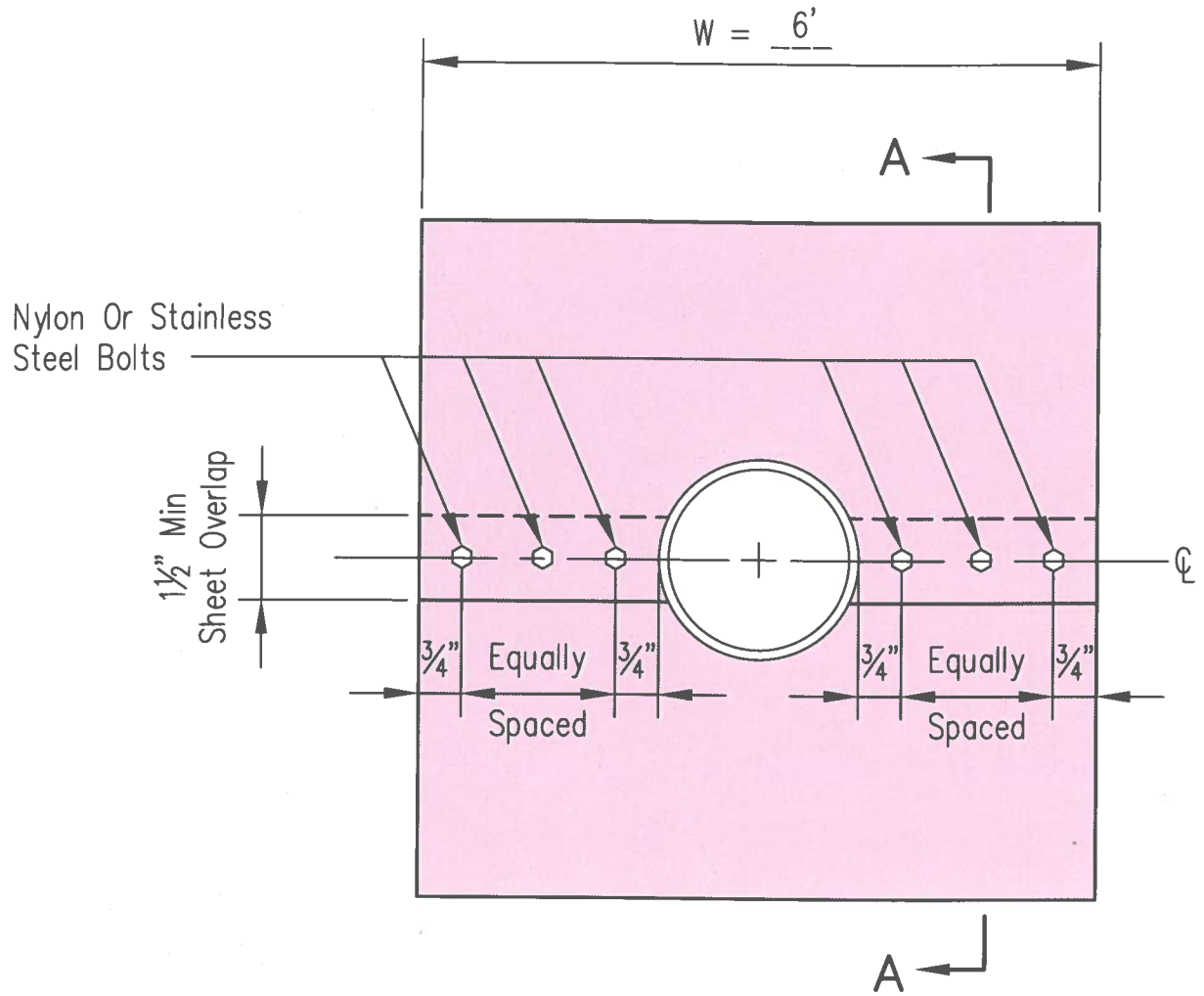

Independent

ELEVATION

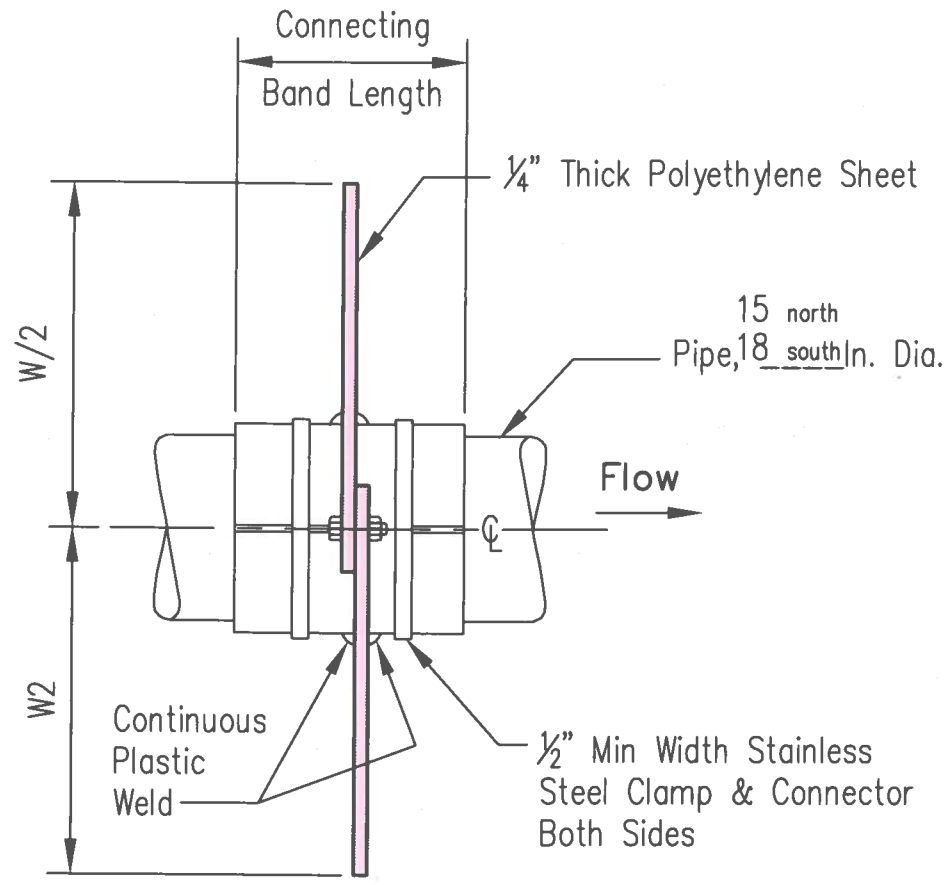

SECTION A–A

NOTES:

1. Pipe, connecting band and seam coating can be either silicon caulk (recommended), or mastic (asphalt or tar based)
2. Apply silicon caulk, tar or mastic to bottom half of connecting band and lay pipe on connecting band.
   Apply silicon caulk or mastic to top half of collar and set in place, lining up bolt holes.
3. Install clamps on split halves of collar and tighten bolts and clamps.
4. Apply silicon caulk, tar or mastic on seams as needed to insure a good seal so that completed installation is watertight.
5. Backfill and hand tamp soil around completed installation.
6. Polyethylene antiseep collars can be used on corrugated and smooth PVC plastic, smooth steel and galvanized pipes.

TABLE OF QUANTITIES

W FEET	Polyethylene Sheet Sq. Ft.	Stainless Steel Clamp & Connector	Connecting Band Min Length	Bolts & Nuts ⅜"x 1"	No. Of Collars
~~3~~	~~9.5~~	~~2~~	~~6"~~	~~6~~	---
~~4~~	~~16.7~~	~~2~~	~~6"~~	~~6~~	---
~~5~~	~~25.8~~	~~2~~	~~8"~~	~~6~~	---
6	37.0	2	8"	6	2
Totals					

Adapted From Wisconsin
Standard Drawing WI–246

Date
Designed J. Lutz 01/27/26
Drawn M. QUINONES 11/1/13
Checked NAK 2/4/2026
Approved

POLYETHYLENE SHEET ANTISEEP COLLAR FOR 4" TO 24" DIAMETER PIPE

Jim McDowell t8559 constructed wetland

United States Department of Agriculture
Natural Resources Conservation Service

File No. IL–ENG–215
Drawing No.
Page 1 of 1
Sheet 11 of 29

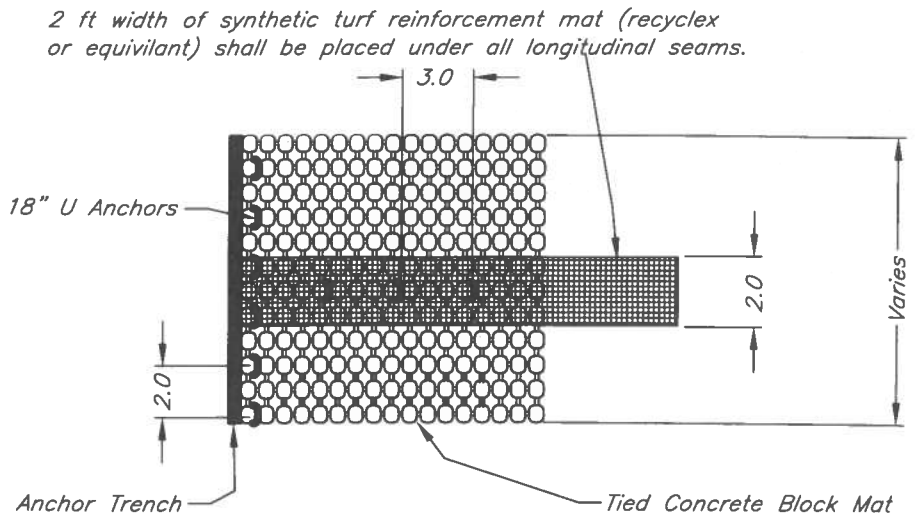

PLAN VIEW (LONGITUDINAL SEAM)

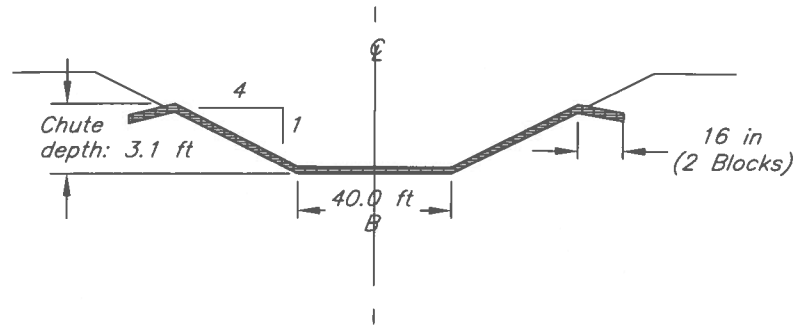

TYPICAL CROSS SECTION

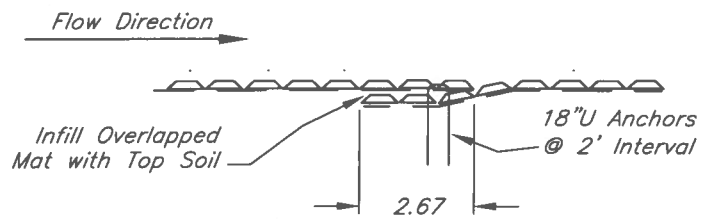

PROFILE VIEW (PERPENDICULAR OVERLAP)

NOTE: Underlayment will not be required if tied concrete block mat rolls manufactured have additional geotextile material width. The added width to rolls will serve as underlayment on seams. Must be site specific NRCS representative to approve.

NOTES:

1. The maximum chute slope in the direction of flow shall be 3:1. The maximum side slopes of the chute shall be 2:1.
2. The outlet section shall be flat (0% grade).
3. Apply seed and fertilizer prior to placing Tied Concrete Block Mat (TCBM), and after TCBM is placed.
4. Longitudinal seams shall be anchored every 3 ft.
5. 2 ft width of synthetic turf reinforcement mat (recyclex or equivilant) shall be placed under all longitudinal seams.
6. Anchor leading and downstream edge of TCBM in a minimum 16" deep (sized for two rows of blocks) trench. Trench should be backfilled with suitable material and compacted.

TABLE OF QUANTITIES		
Item	Quantity	Unit
Tied Concrete Block Mat	2720	sq.ft.
Underlayment	400	sq.ft.
Excavation	----	cu.yd.
Earthfill	----	cu.yd.
Seeding	0.1	acres
Rebar Anchors	126	No.

NOTES Cont.:

7. Recess two outside blocks 16" into subgrade along each edge of structure.
8. On perpendicular lap, and at anchor trenches, 18" U anchors are installed in 2' increments across overlap seam. Install anchor behind first row of blocks so that anchor is tight with subgrade.
9. Downstream rolls of TCBM and underlayment are shingled under upstream roll.

NOT TO SCALE

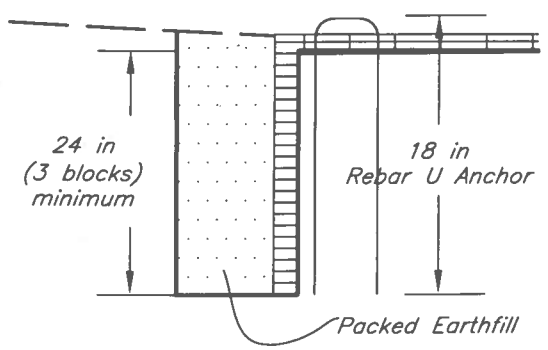

CHUTE ANCHOR DETAIL

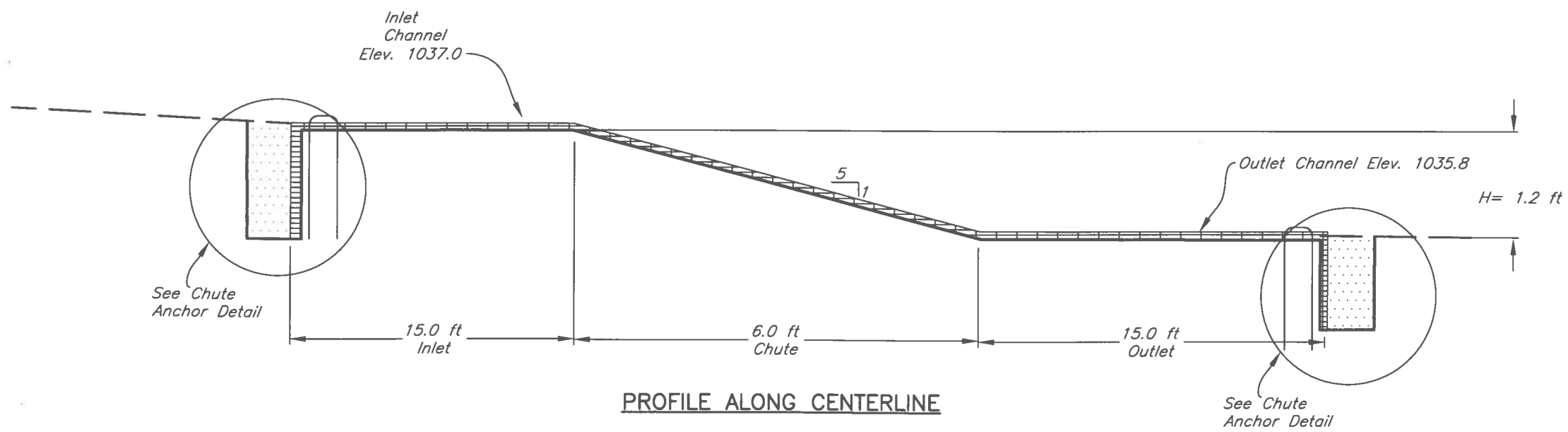

PROFILE ALONG CENTERLINE

Date 1/2020
Designed N. Klingenberg
Drawn Jeff A. Lutz 2/2026
Checked NAK 2/5/2026
Approved

TIED CONCRETE BLOCK MAT
CHUTE #1 DETAILS SE¼ NW¼ sec. 21
North site open channel
Jim McDowell t8559 wetlands structure

United States Department of Agriculture
Natural Resources Conservation Service

File No.
Drawing No.
Sheet 12 of 29

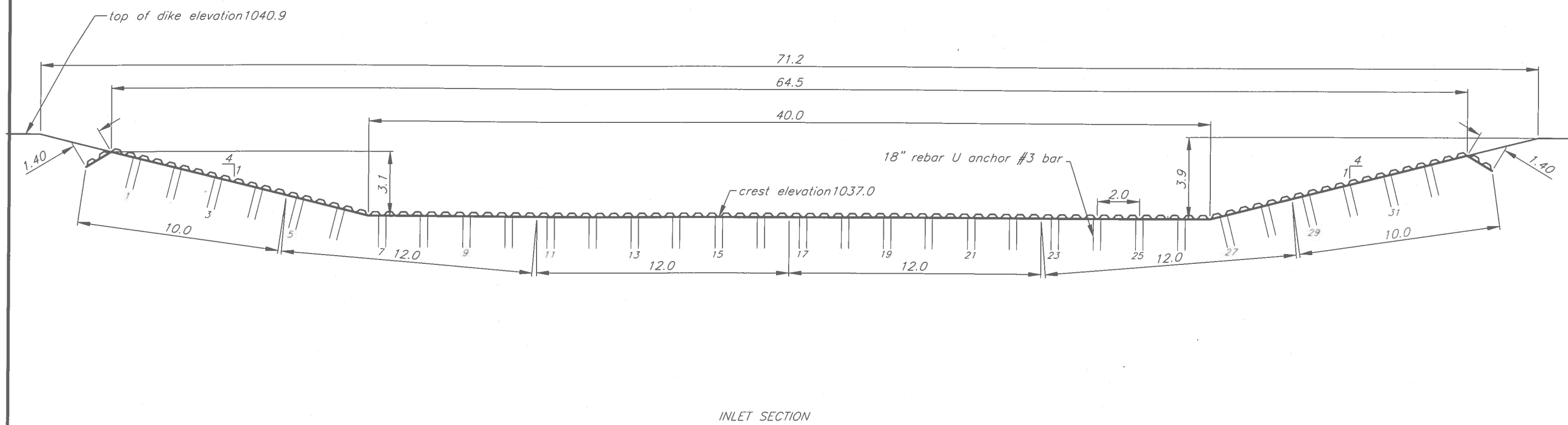

INLET SECTION

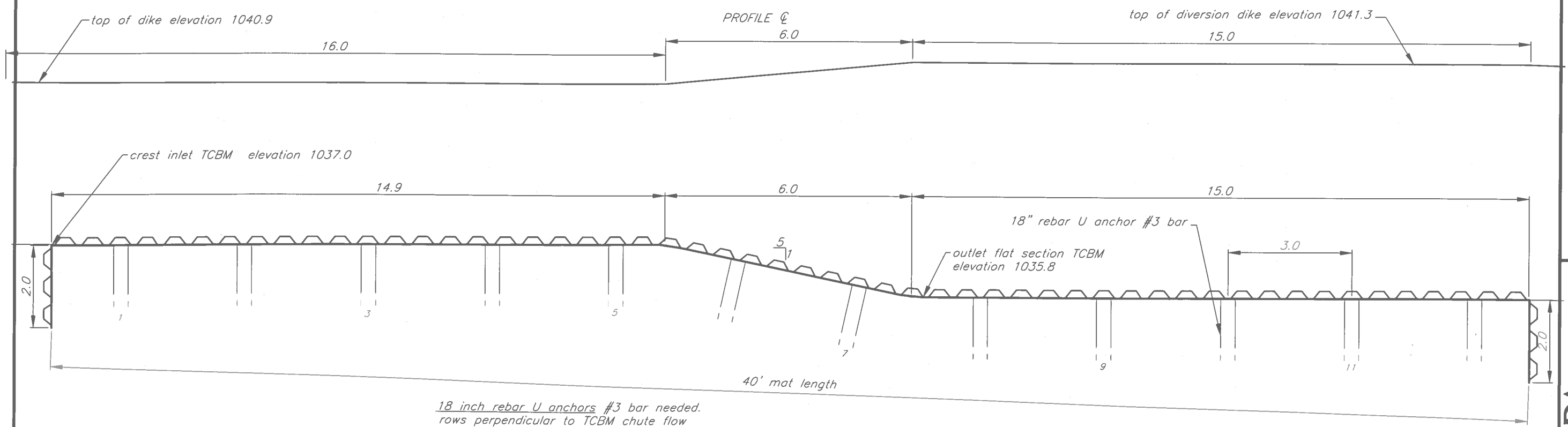

Tied Concrete Block Mat blankets needed:
12' wide by 40' length – number 4
10' wide by 40' length – number 2
TOTAL square feet needed 2720

18 inch rebar U anchors #3 bar needed.
rows perpendicular to TCBM chute flow

upstream inlet	– 33 number
downstream outlet	– 33 number
longitudinal seams TCBM chute	
east	– 12 number
east inside	– 12 number
middle	– 12 number
west inside	– 12 number
west	– 12 number

TOTAL 18" rebar U anchors needed 126

Designed Jeff A. Lutz Date 7/2025
Drawn Jeff A. Lutz 1/2026
Checked NAK 2/4/2026
Approved

Jim McDowell t8559
Constructed Wetland
PROFILE DETAIL SECTION TCBM CHUTE #1
NW¼ sec. 21 T.89N.–R.18W. German twp. Grundy County, Iowa

United States Department of Agriculture
Natural Resources Conservation Service

File No. Jim McDowell t8559 constructed
Drawing No. GRUNDY.dwg

Sheet 13 of 29

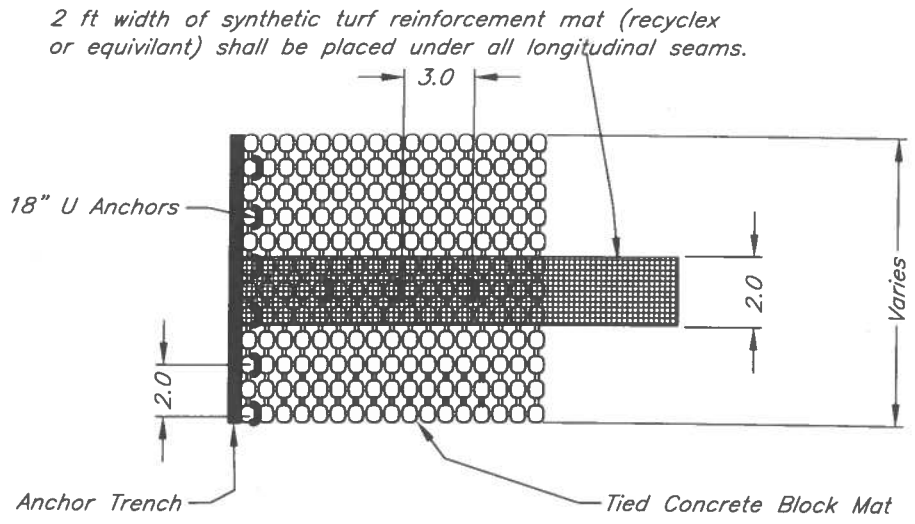

PLAN VIEW (LONGITUDINAL SEAM)

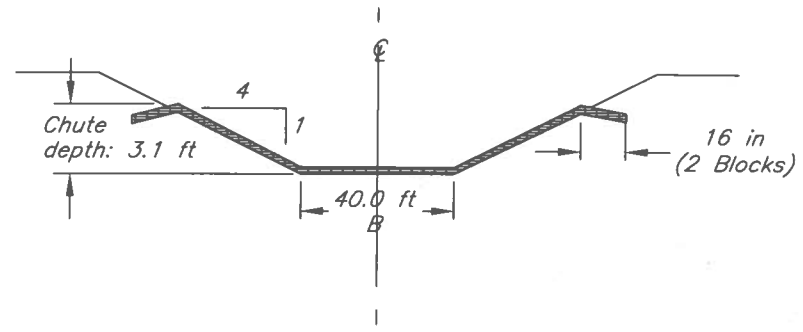

TYPICAL CROSS SECTION

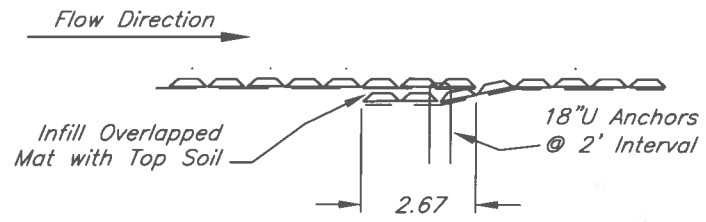

PROFILE VIEW (PERPENDICULAR OVERLAP)

NOTE: Underlayment will not be required if tied concrete block mat rolls manufactured have additional geotextile material width. The added width to rolls will serve as underlayment on seams. Must be site specific NRCS representative to approve.

NOTES:

1. The maximum chute slope in the direction of flow shall be 3:1. The maximum side slopes of the chute shall be 2:1.
2. The outlet section shall be flat (0% grade).
3. Apply seed and fertilizer prior to placing Tied Concrete Block Mat (TCBM), and after TCBM is placed.
4. Longitudinal seams shall be anchored every 3 ft.
5. 2 ft width of synthetic turf reinforcement mat (recyclex or equivilant) shall be placed under all longitudinal seams.
6. Anchor leading and downstream edge of TCBM in a minimum 16" deep (sized for two rows of blocks) trench. Trench should be backfilled with suitable material and compacted.

TABLE OF QUANTITIES

Item	Quantity	Unit
Tied Concrete Block Mat	3400	sq.ft.
Underlayment	500	sq.ft.
Excavation	----	cu.yd.
Earthfill	----	cu.yd.
Seeding	0.1	acres
Rebar Anchors	141	No.

NOTES Cont.:

7. Recess two outside blocks 16" into subgrade along each edge of structure.
8. On perpendicular lap, and at anchor trenches, 18" U anchors are installed in 2' increments across overlap seam. Install anchor behind first row of blocks so that anchor is tight with subgrade.
9. Downstream rolls of TCBM and underlayment are shingled under upstream roll.

NOT TO SCALE

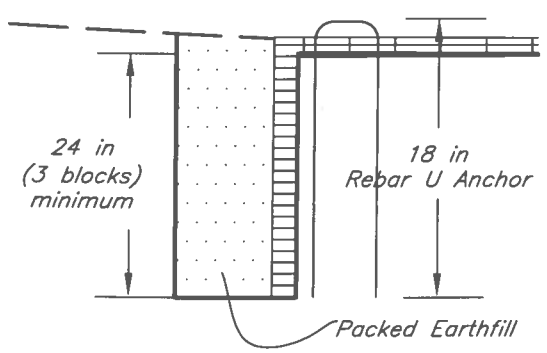

CHUTE ANCHOR DETAIL

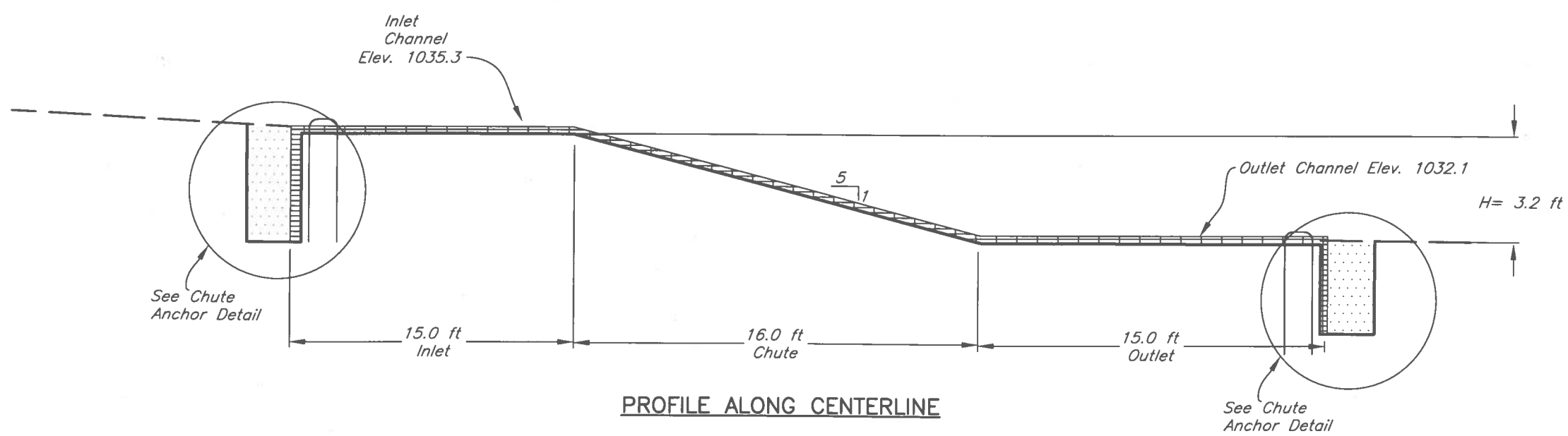

PROFILE ALONG CENTERLINE

Designed N. Klingenberg Date 1/2020
Drawn Jeff A. Lutz 2/2026
Checked NAK 2/6/2026
Approved

TIED CONCRETE BLOCK MAT
CHUTE #2 DETAILS SE¼ NW¼ sec. 21
North site open channel
Jim McDowell t8559 wetlands structure

USDA United States Department of Agriculture
Natural Resources Conservation Service

File No.
Drawing No.
Sheet 14 of 29

looking downstream

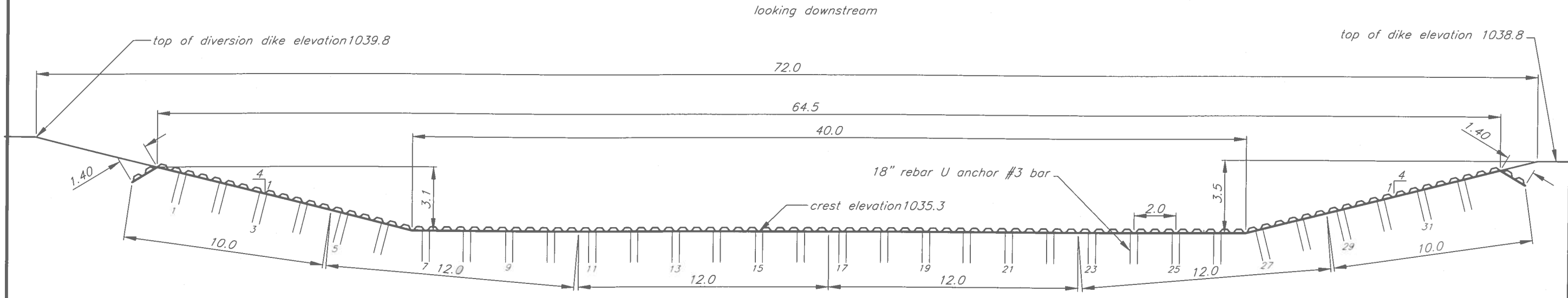

INLET SECTION

PROFILE ℄

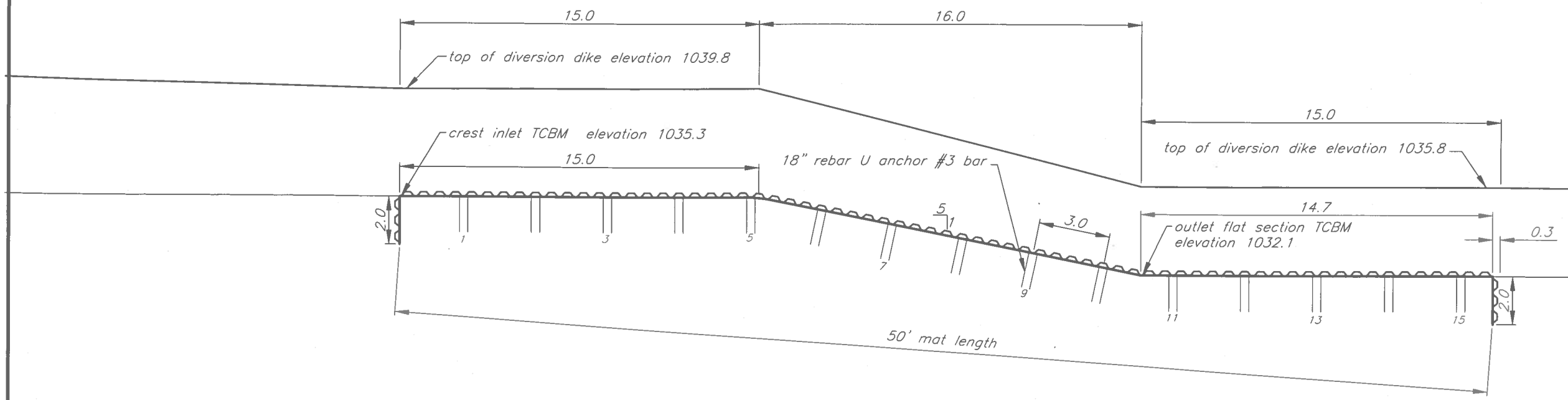

Tied Concrete Block Mat blankets needed:
12' wide by 50' length – number 4
10' wide by 50' length – number 2
TOTAL square feet needed 3400

18 inch rebar U anchors #3 bar needed.
rows perpendicular to TCBM chute flow

upstream inlet	– 33 number
downstream outlet	– 33 number
longitudinal seams TCBM chute	
south	– 15 number
south inside	– 15 number
middle	– 15 number
north inside	– 15 number
north	– 15 number

TOTAL 18" rebar U anchors needed 141

	Date
Designed Jeff A. Lutz	7/2025
Drawn Jeff A. Lutz	1/2026
Checked NAK	2/4/2026
Approved	

Jim McDowell t8559 Constructed Wetland

PROFILE DETAIL SECTION TCBM CHUTE #2

NW¼ sec. 21 T.89N.–R.18W. German twp. Grundy County, Iowa

United States Department of Agriculture
Natural Resources Conservation Service

File No. Jim McDowell t8559 constructed wetland
Drawing No. GRUNDY.dwg

Sheet 15 of 29

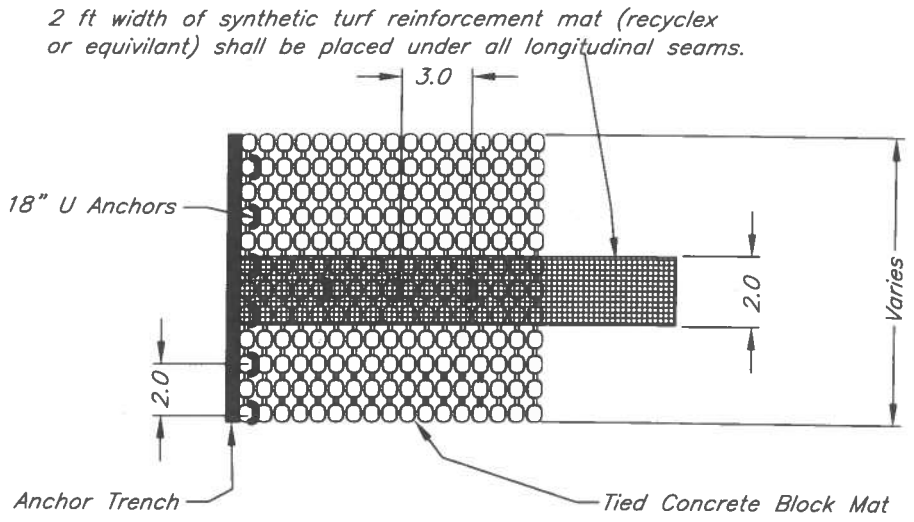

PLAN VIEW (LONGITUDINAL SEAM)

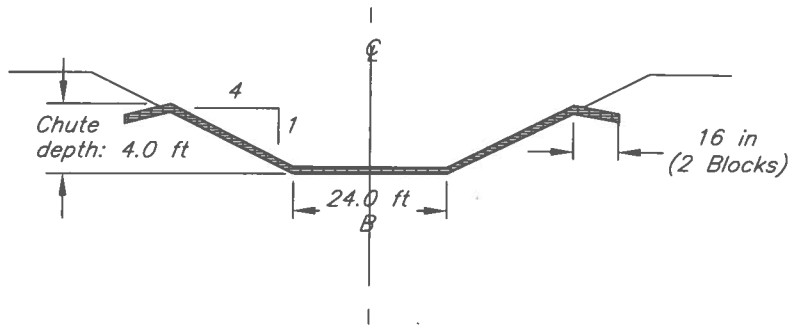

TYPICAL CROSS SECTION

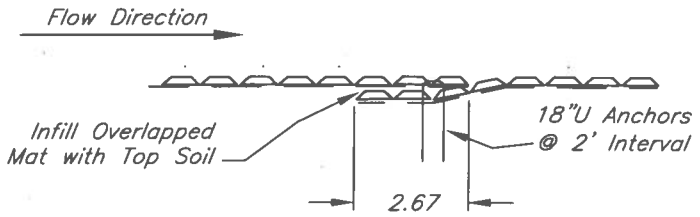

PROFILE VIEW (PERPENDICULAR OVERLAP)

NOTES:

1. The maximum chute slope in the direction of flow shall be 3:1. The maximum side slopes of the chute shall be 2:1.
2. The outlet section shall be flat (0% grade).
3. Apply seed and fertilizer prior to placing Tied Concrete Block Mat (TCBM), and after TCBM is placed.
4. Longitudinal seams shall be anchored every 3 ft.
5. 2 ft width of synthetic turf reinforcement mat (recyclex or equivilant) shall be placed under all longitudinal seams.
6. Anchor leading and downstream edge of TCBM in a minimum 16" deep (sized for two rows of blocks) trench. Trench should be backfilled with suitable material and compacted.

NOTE: Underlayment will not be required if tied concrete block mat rolls manufactured have additional geotextile material width. The added width to rolls will serve as underlayment on seams. Must be site specific NRCS representative to approve.

TABLE OF QUANTITIES		
Item	Quantity	Unit
Tied Concrete Block Mat	5280	sq.ft.
Underlayment	680	sq.ft.
Excavation	----	cu.yd.
Earthfill	----	cu.yd.
Seeding	0.2	acres
Rebar Anchors	195	No.

NOTES Cont.:

7. Recess two outside blocks 16" into subgrade along each edge of structure.
8. On perpendicular lap, and at anchor trenches, 18" U anchors are installed in 2' increments across overlap seam. Install anchor behind first row of blocks so that anchor is tight with subgrade.
9. Downstream rolls of TCBM and underlayment are shingled under upstream roll.

NOT TO SCALE

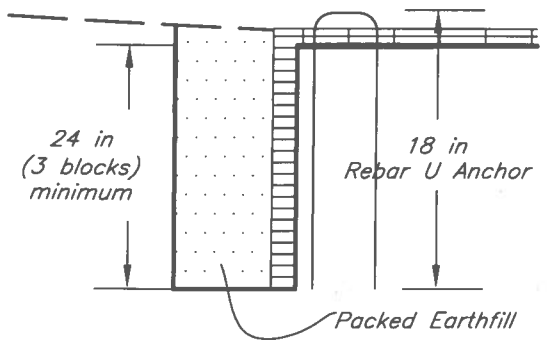

CHUTE ANCHOR DETAIL

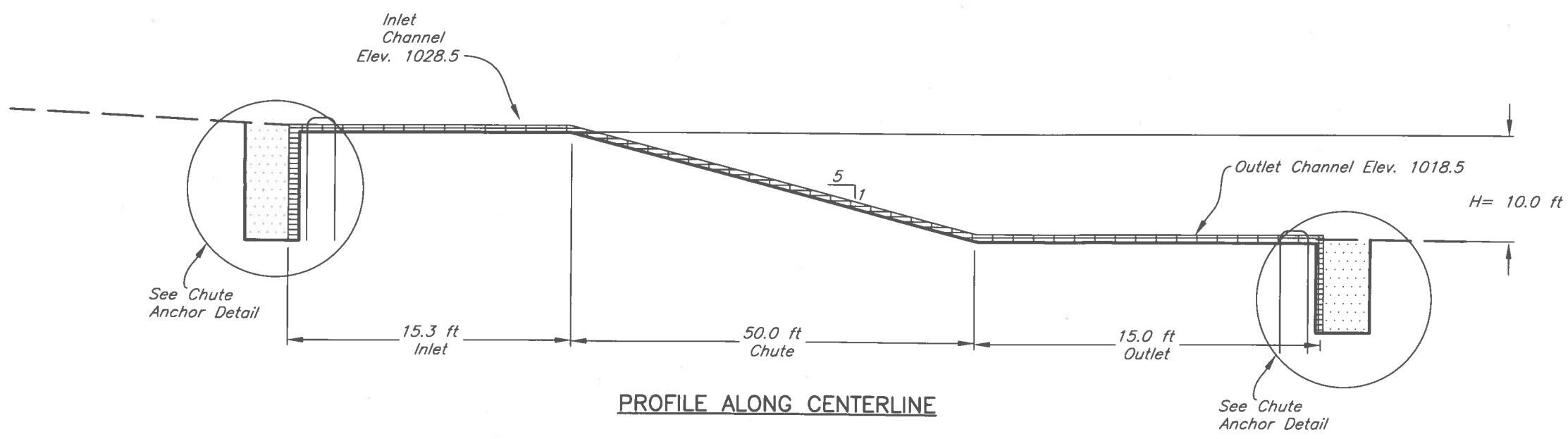

PROFILE ALONG CENTERLINE

Date 1/2020 2/2026 2/5/2026
Designed N. Klingenberg
Drawn Jeff A. Lutz
Checked NAK
Approved

TIED CONCRETE BLOCK MAT
CHUTE #3 DETAILS SW¼ NW¼ sec. 21
South site
Jim McDowell t8559 wetlands structure

United States Department of Agriculture
Natural Resources Conservation Service

File No.

Drawing No.

Sheet 16 of 29

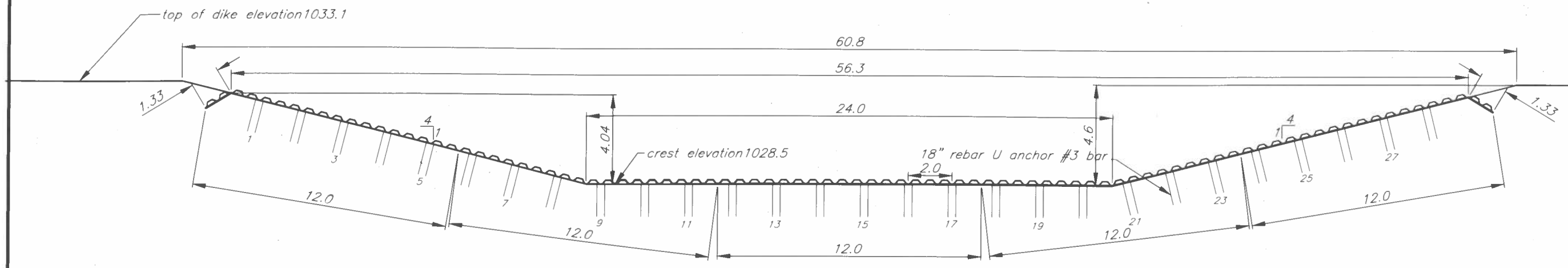

INLET SECTION

PROFILE ℄

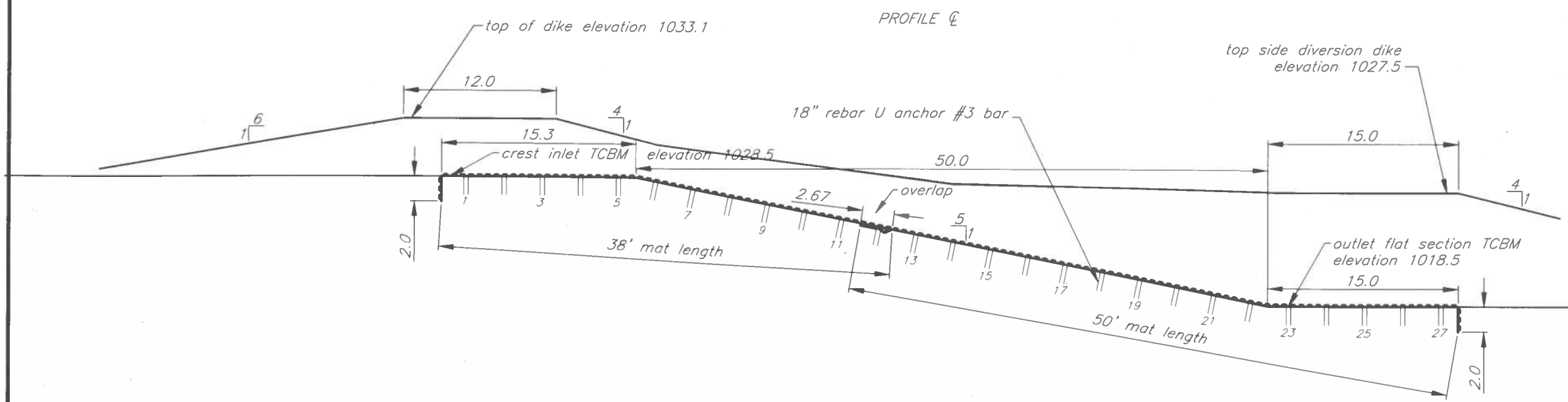

Tied Concrete Block Mat blankets needed:
12' wide by 50' length – number 5
12 wide by 38 length – number 5
TOTAL square feet needed 5280

18 inch rebar U anchors #3 bar needed.
rows perpendicular to TCBM chute flow

upstream inlet	– 29 number
overlap of mats	– 29 number
downstream outlet	– 29 number
longitudinal seams TCBM chute	
east	– 27 number.
east inside	– 27 number
west inside	– 27 number
west	– 27 number

TOTAL 18" rebar U anchors needed 195

Date 7/2025
Designed Jeff A. Lutz
Drawn Jeff A. Lutz 1/2026
Checked NAK 2/4/2026
Approved

Jim McDowell t8559
Constructed Wetland
PROFILE DETAIL SECTION TCBM CHUTE #3
NW¼ sec. 21 T.89N.–R.18W. German twp. Grundy County, Iowa

United States Department of Agriculture
Natural Resources Conservation Service

File No. Jim McDowell t8559 constructed wetland GRUNDY.dwg
Drawing No.

Sheet 17 of 29

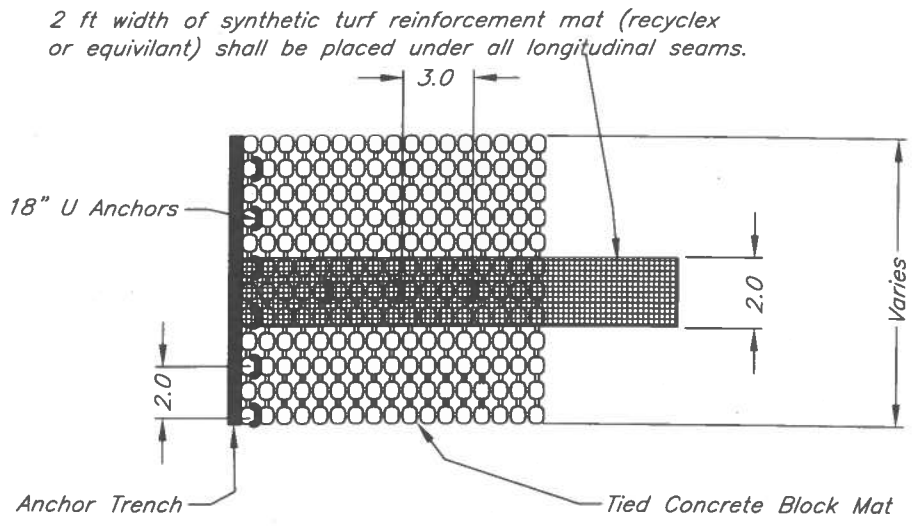

PLAN VIEW (LONGITUDINAL SEAM)

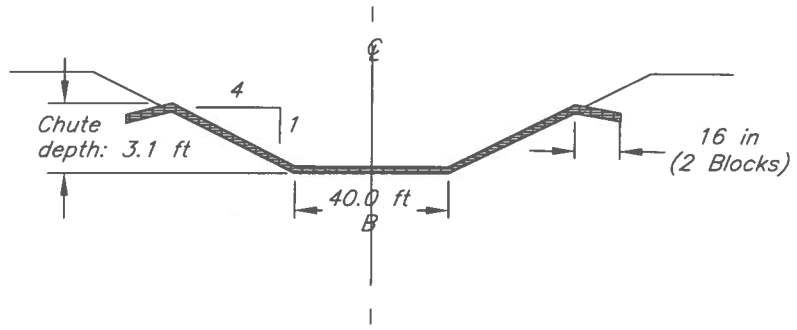

TYPICAL CROSS SECTION

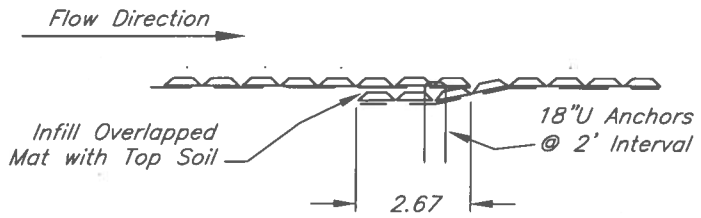

PROFILE VIEW (PERPENDICULAR OVERLAP)

NOTE: Underlayment will not be required if tied concrete block mat rolls manufactured have additional geotextile material width. The added width to rolls will serve as underlayment on seams. Must be site specific NRCS representative to approve.

NOTES:

1. The maximum chute slope in the direction of flow shall be 3:1. The maximum side slopes of the chute shall be 2:1.
2. The outlet section shall be flat (0% grade).
3. Apply seed and fertilizer prior to placing Tied Concrete Block Mat (TCBM), and after TCBM is placed.
4. Longitudinal seams shall be anchored every 3 ft.
5. 2 ft width of synthetic turf reinforcement mat (recyclex or equivilant) shall be placed under all longitudinal seams.
6. Anchor leading and downstream edge of TCBM in a minimum 16" deep (sized for two rows of blocks) trench. Trench should be backfilled with suitable material and compacted.

TABLE OF QUANTITIES		
Item	Quantity	Unit
Tied Concrete Block Mat	3400	sq.ft.
Underlayment	500	sq.ft.
Excavation	----	cu.yd.
Earthfill	----	cu.yd.
Seeding	0.1	acres
Rebar Anchors	141	No.

NOTES Cont.:

7. Recess two outside blocks 16" into subgrade along each edge of structure.
8. On perpendicular lap, and at anchor trenches, 18" U anchors are installed in 2' increments across overlap seam. Install anchor behind first row of blocks so that anchor is tight with subgrade.
9. Downstream rolls of TCBM and underlayment are shingled under upstream roll.

NOT TO SCALE

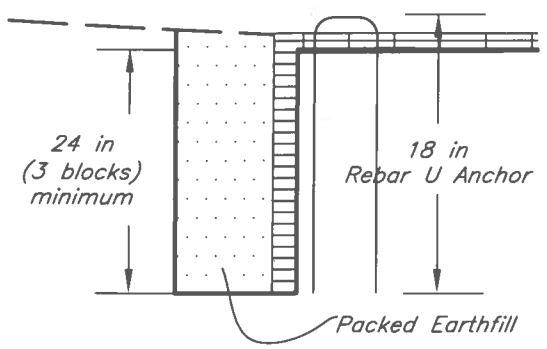

CHUTE ANCHOR DETAIL

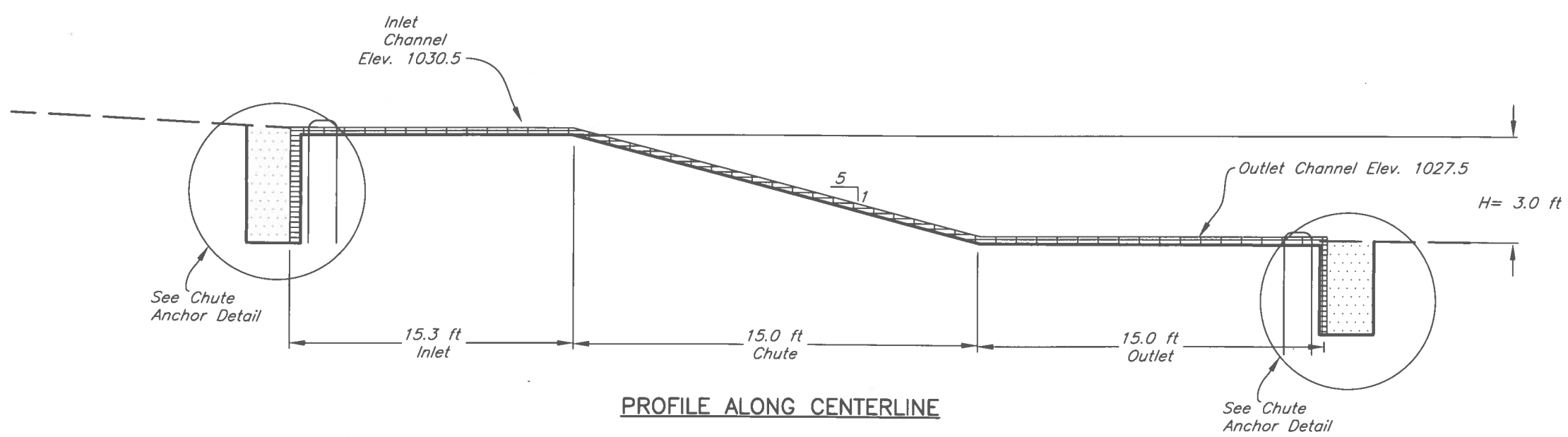

PROFILE ALONG CENTERLINE

Designed N. Klingenberg Date 1/2020
Drawn Jeff A. Lutz 2/2026
Checked NAK 2/5/2026
Approved

TIED CONCRETE BLOCK MAT
CHUTE #4 DETAILS SE¼ NW¼ sec. 21
North site t8559 wetlands structure
open channel
Jim McDowell

United States Department of Agriculture
Natural Resources Conservation Service

File No.
Drawing No.
Sheet 18 of 29

looking downstream

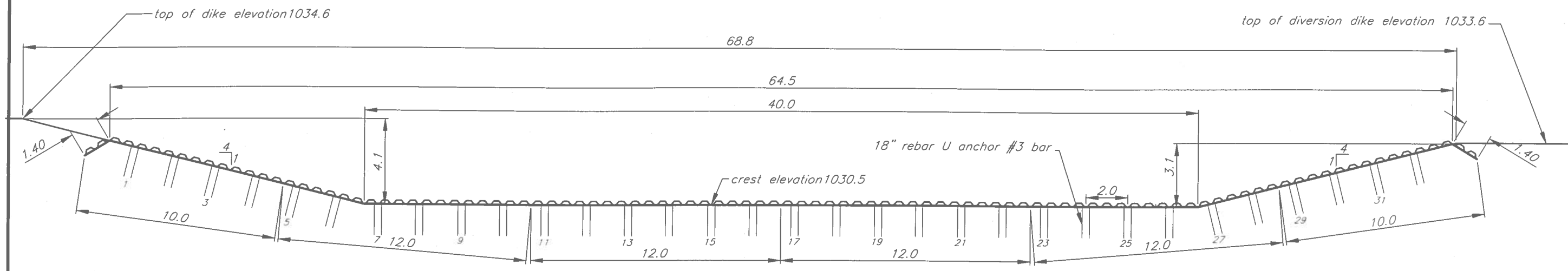

INLET SECTION

PROFILE ℄

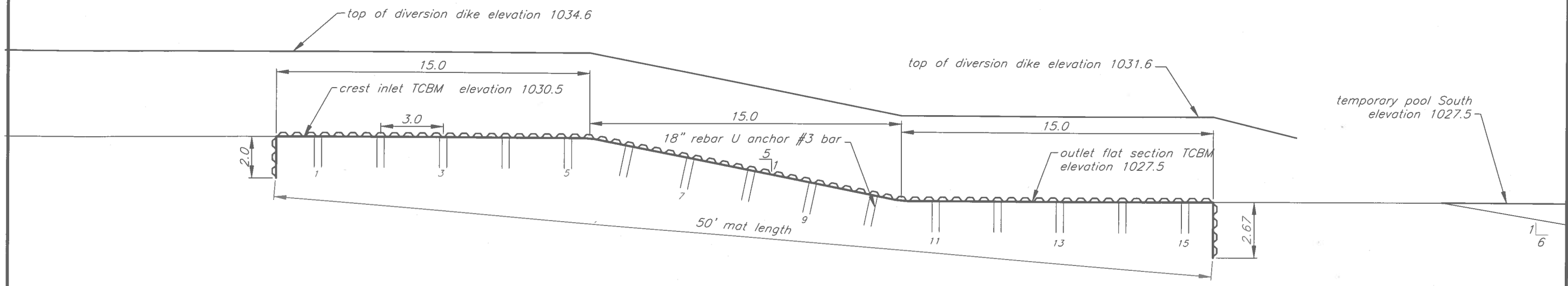

Tied Concrete Block Mat blankets needed:
12' wide by 50' length – number 4
10' wide by 50' length – number 2
TOTAL square feet needed 3400

18 inch rebar U anchors #3 bar needed.
rows perpendicular to TCBM chute flow

upstream inlet	– 33 number
downstream outlet	– 33 number
longitudinal seams TCBM chute	
south	– 15 number
south inside	– 15 number
middle	– 15 number
north inside	– 15 number
north	– 15 number

TOTAL 18" rebar U anchors needed 141

Date
Designed Jeff A. Lutz 7/2025
Drawn Jeff A. Lutz 1/2026
Checked WAK 2/4/2026
Approved

Jim McDowell t8559
Constructed Wetland
PROFILE DETAIL SECTION TCBM CHUTE #4
NW¼ sec. 21 T.89N.–R.18W. German twp. Grundy County, Iowa

United States Department of Agriculture
Natural Resources Conservation Service

File No. Jim McDowell t8559 constructed wetland
Drawing No. GRUNDY.dwg

Sheet 19 of 29

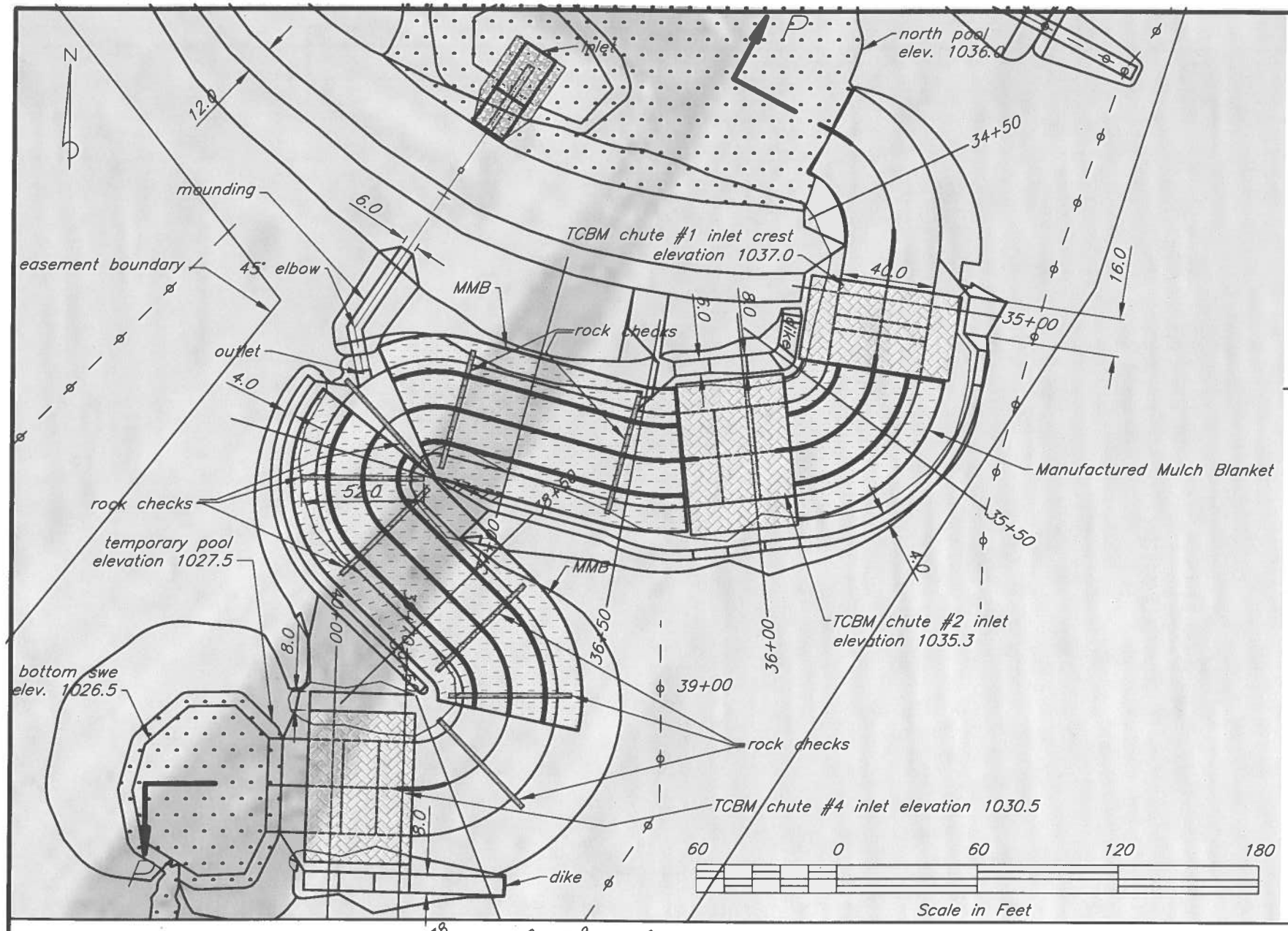

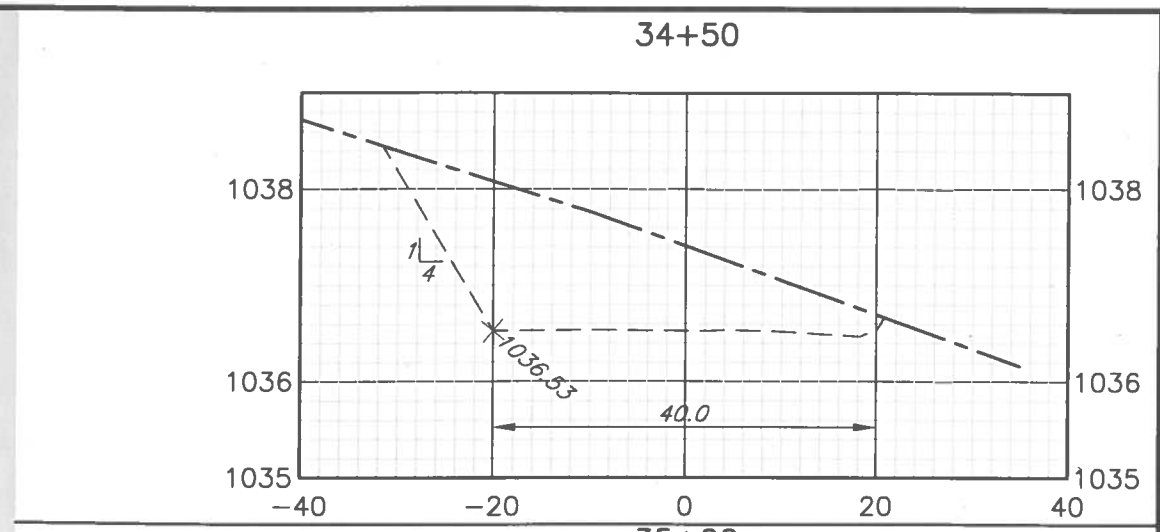

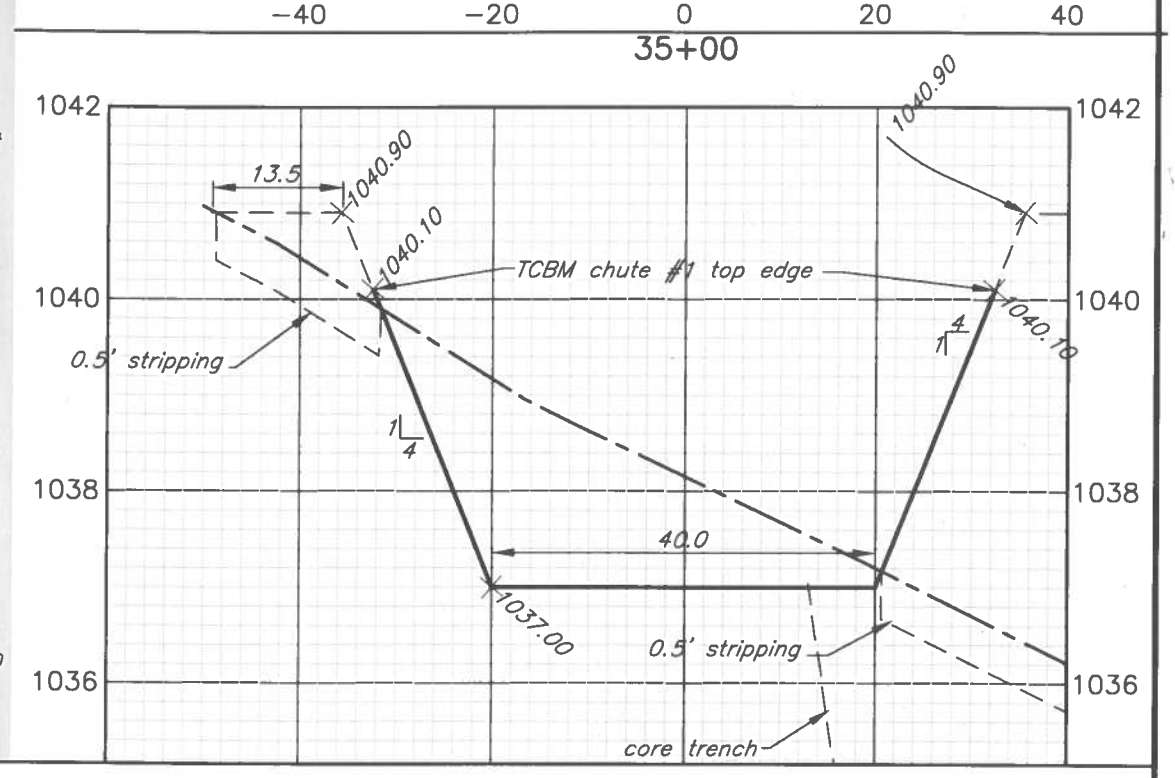

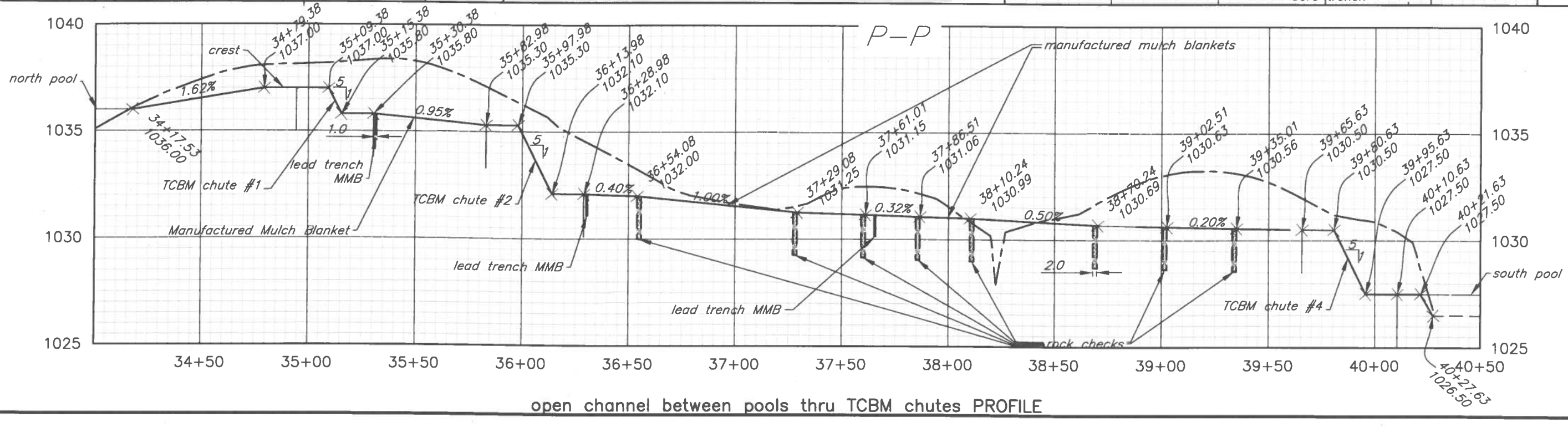

open channel between pools thru TCBM chutes PROFILE

	Date
Designed Jeff A. Lutz	9/2025
Drawn Jeff A. Lutz	1/2026
Checked DAK	2/5/2026
Approved:	

PROFILE NORTH OUTLET CHANNEL TO SOUTH POOL
Constructed Wetland
Jim McDowell t8559
NW¼ sec. 21 T.89N.–R.18W. German twp. Grundy County, IA

United States Department of Agriculture
Natural Resources Conservation Service

File No. Jim McDowell t8559 constructed wetland
Drawing No. 2025 Grundy.dwg

Sheet 20 of 29

35+50

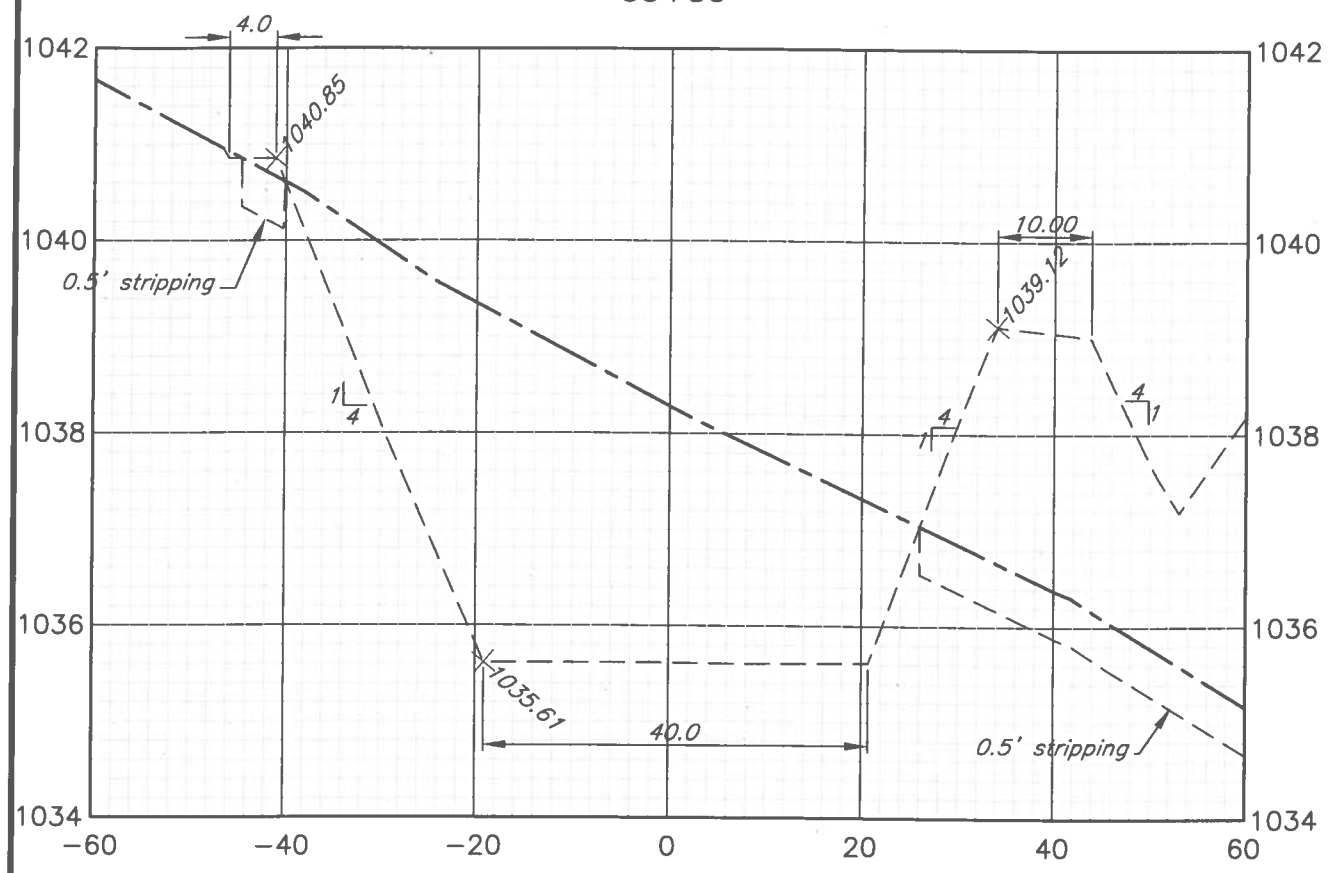

36+00

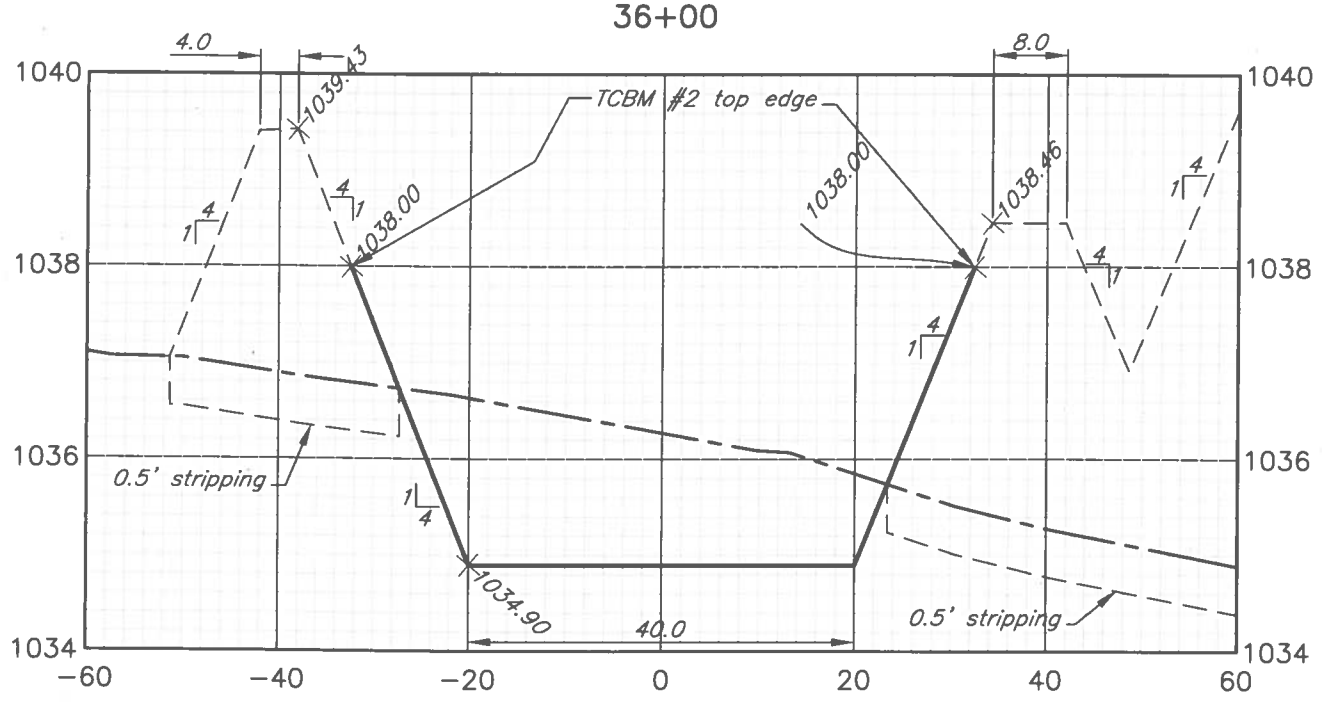

36+50

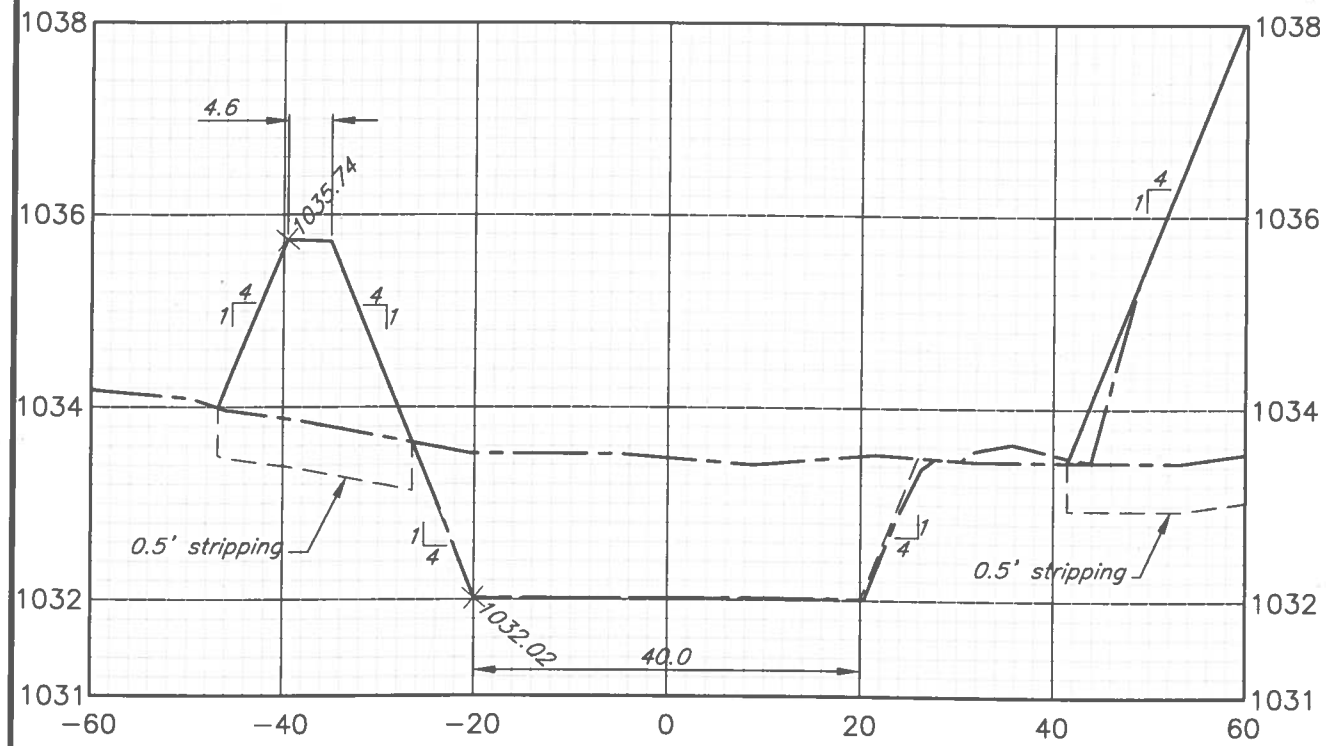

37+00

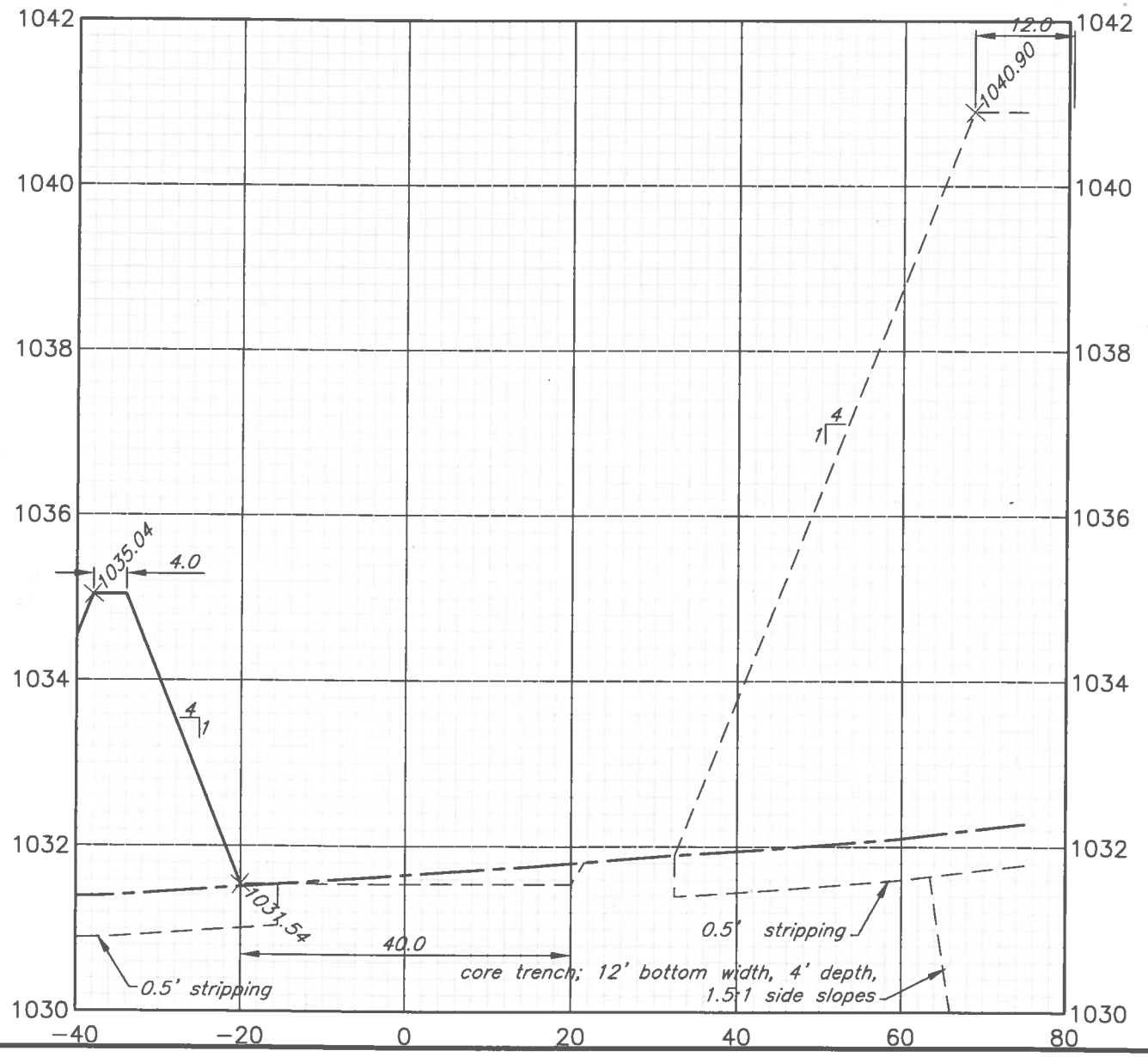

		Date
Designed	Jeff A. Lutz	8/2025
Drawn	Jeff A. Lutz	1/2026
Checked	NJK	2/13/26
Approved		

CROSS SECTIONS NORTH OUTLET CHANNEL TO SOUTH POOL
Constructed Wetland
Jim McDowell t8559
NW¼ sec. 21 T.89N.–R.18W. German twp. Grundy County, IA

United States Department of Agriculture
USDA
Natural Resources Conservation Service

File No. Jim McDowell t8559 constructed
Drawing No. 2025 Grundy.dwg

Sheet 21 of 29

37+77

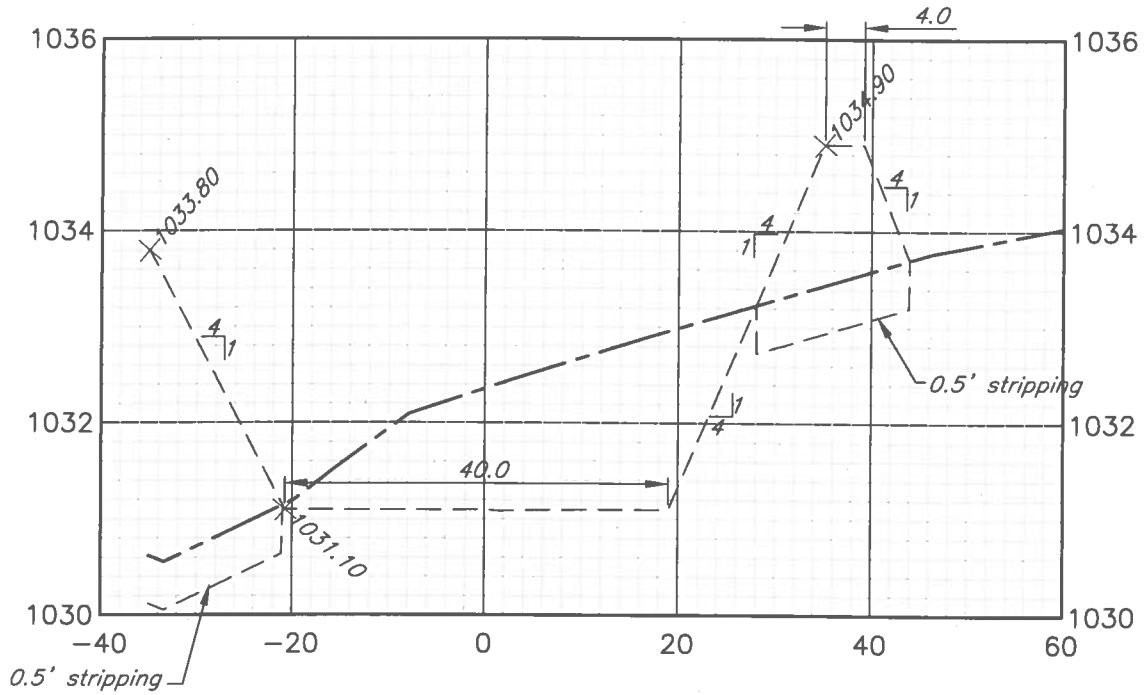

38+50

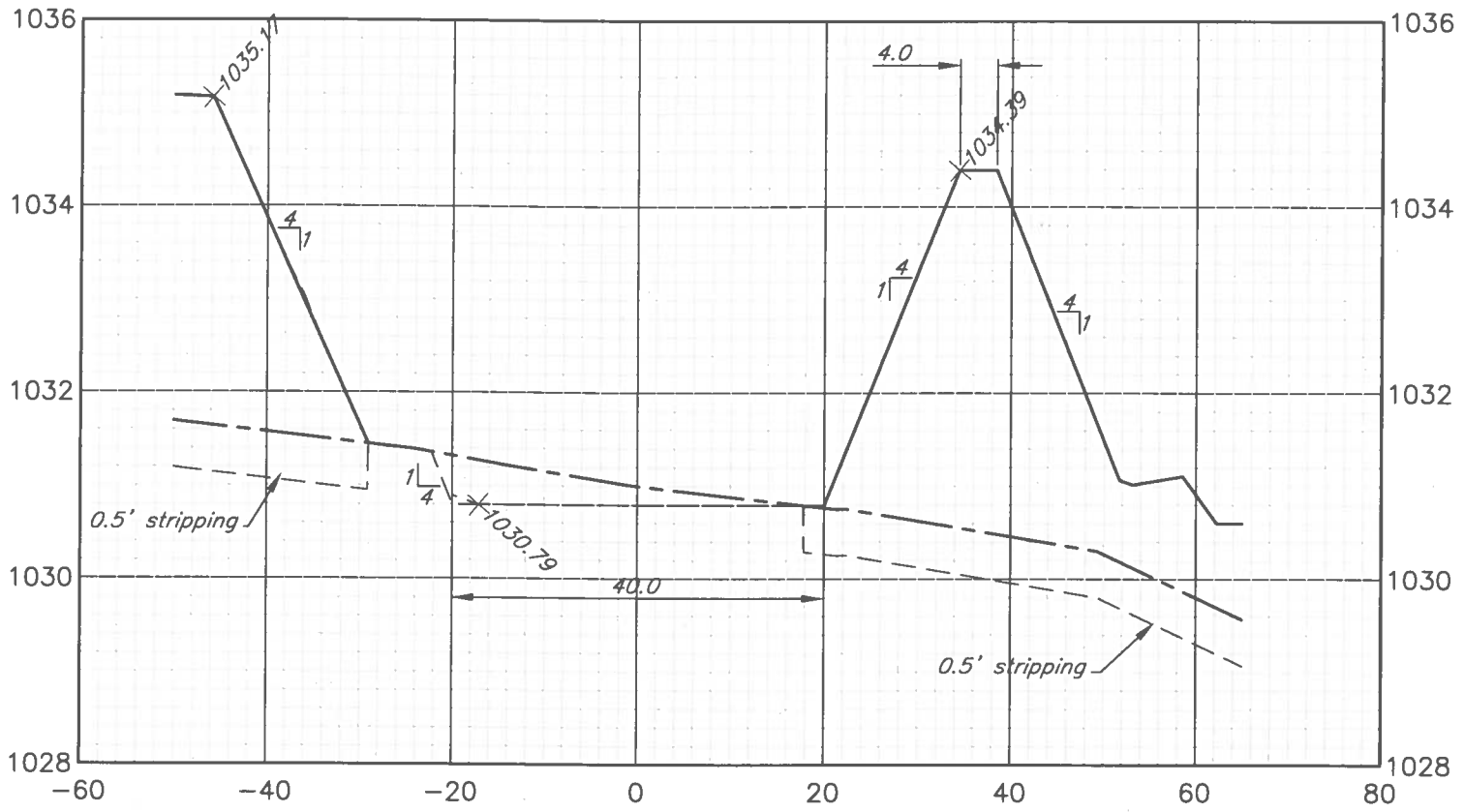

39+00

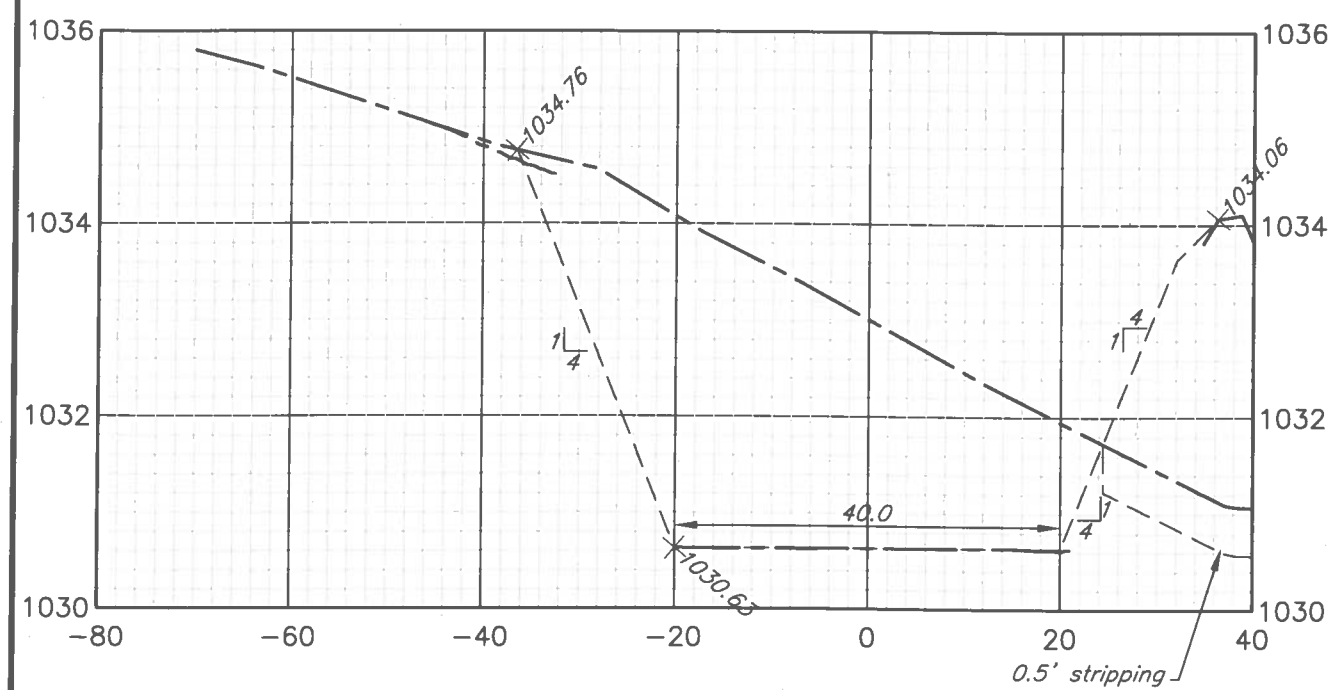

39+50

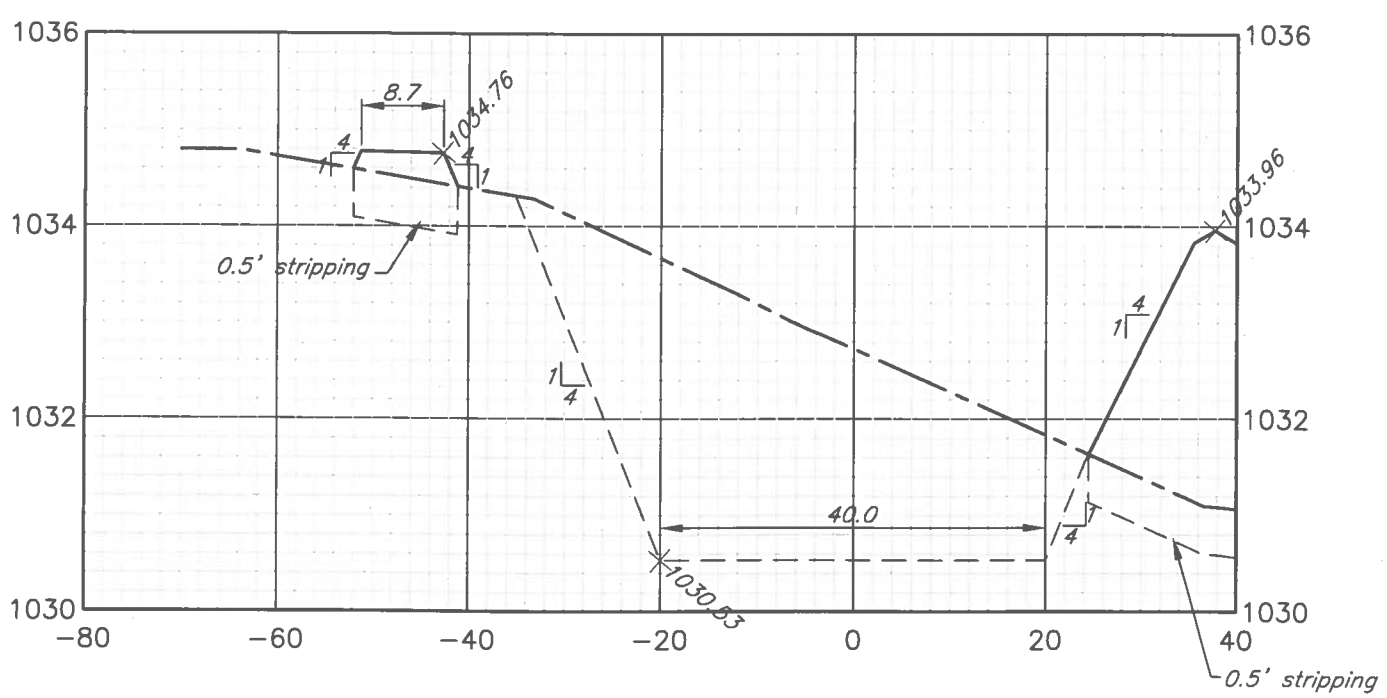

Date
Designed Jeff A. Lutz 8/2025
Drawn Jeff A. Lutz 1/2026
Checked NAK 2/3/2026
Approved

CROSS SECTIONS NORTH OUTLET CHANNEL TO SOUTH POOL
Constructed Wetland
Jim McDowell t8559
NW¼ sec. 21 T.89N.–R.18W. German twp. Grundy County, IA

United States Department of Agriculture
USDA
Natural Resources Conservation Service

File No. Jim McDowell t8559 constructed
Drawing No. 2025 Grundy.dwg

Sheet 22 of 29

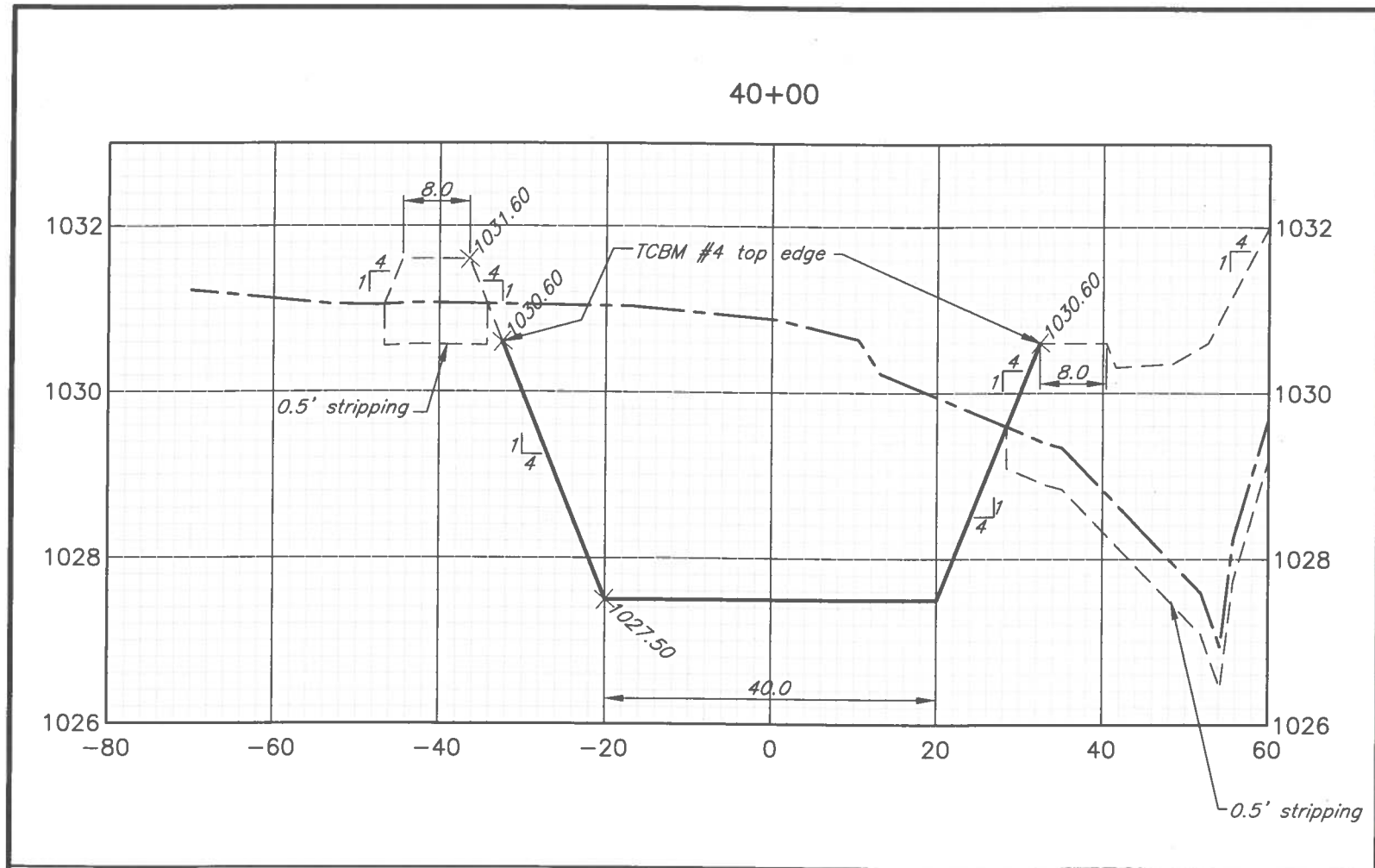

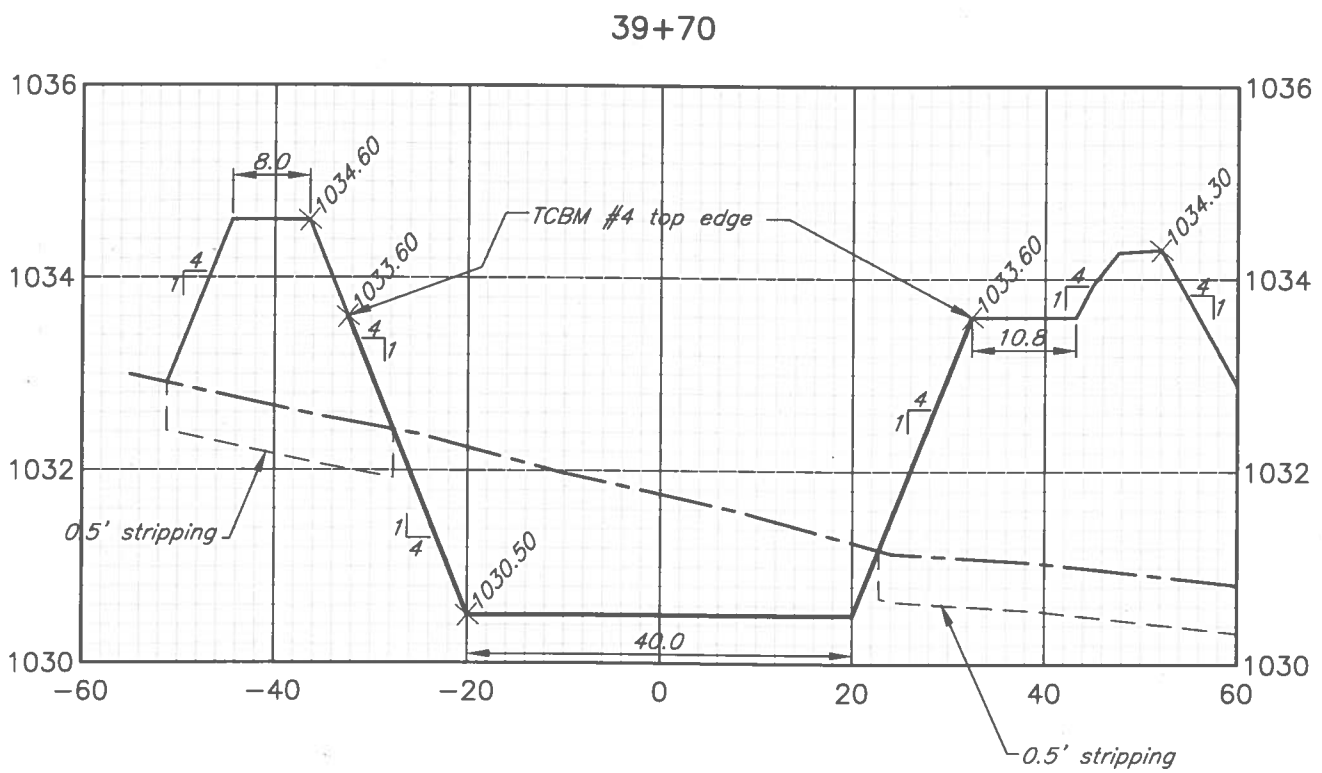

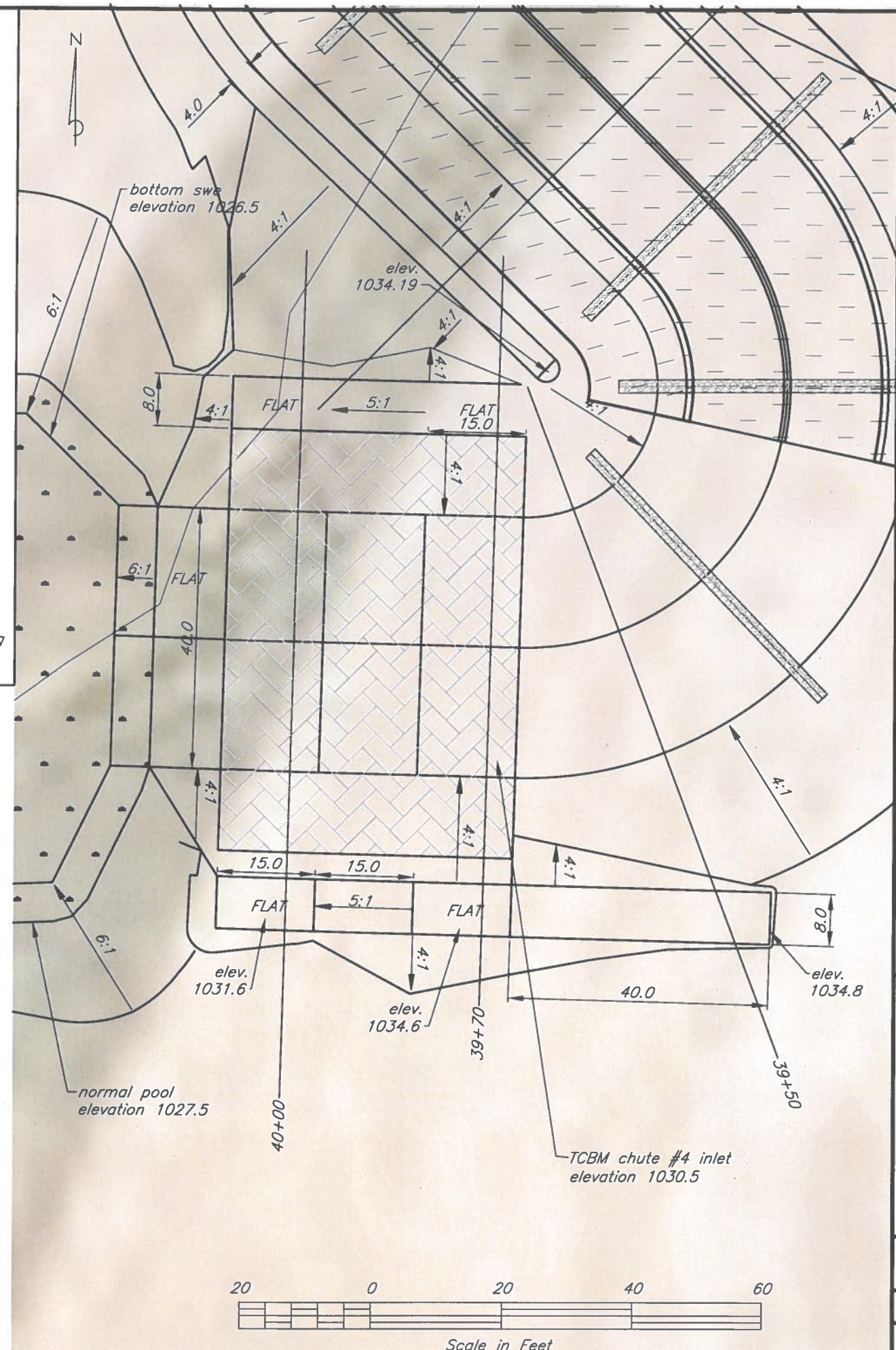

Designed Jeff A. Lutz 8/2025
Drawn Jeff A. Lutz 1/2026
Checked NAK 2/3/2026
Approved

CROSS SECTIONS OUTLET CHANNEL TCBM CHUTE #4
Constructed Wetland
Jim McDowell t8559
NW¼ sec. 21 T.89N.–R.18W. German twp. Grundy County, IA

United States Department of Agriculture
Natural Resources Conservation Service

File No. Jim McDowell t8559 constructed wetland 2025
Drawing No. Grundy.dwg

Sheet 23 of 29

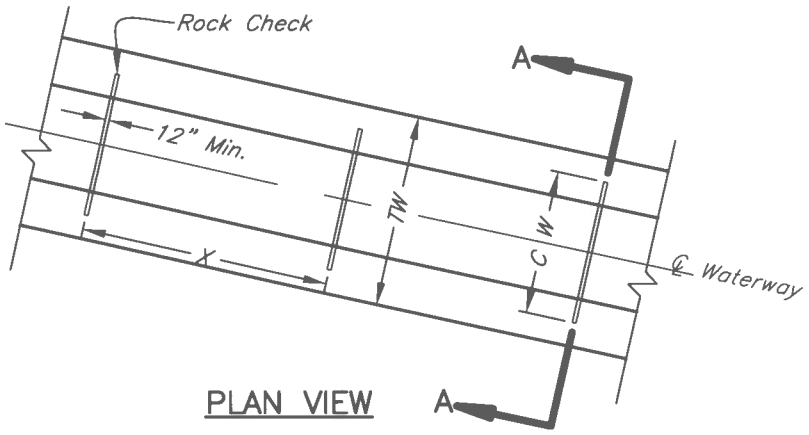

PLAN VIEW

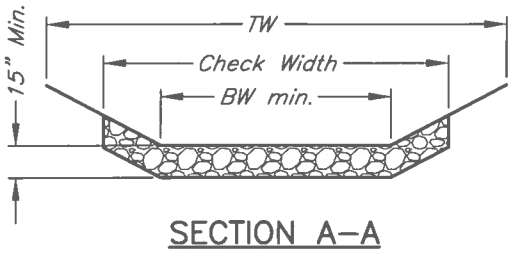

SECTION A–A

Notes:

1. *Excavate trench a minimum 12 inches wide (thickness), not to exceed 18 inches.*
2. *Rock shall be graded according to the table shown.*
3. *Compact rock backfill by rolling with construction equipment.*
4. *Finished rock surface will be flush with the ground surface.*

ROCK GRADATION: D50=3"–4"	
Size	% Passing By Weight
50 lb.	*100*
10 lb.	*30–70*
1 lb.	*0–16*

Check Width

[~~BW~~ 52 ft X THICKNESS 24 in/12 X TRENCH DEPTH 24 in/12] / [27 cu ft/cu yd] X 1.6 tons/cu yd

= 12.33 tons per rock check

Rock Check Data								
Waterway Number	Start Station	End Station	Check Spacing (X)	No. of Checks	Check Width (Section A–A)	Thickness (in)	Depth (in)	Total (Ton)
outlet channel	*36+55*	*37+28*	*73'*	*2*	*52'*	*24*	*24*	*24.7*
outlet channel	*37+60*	*38+11*	*26'*	*3*	*52'*	*24*	*24*	*37.0*
outlet channel	*38+69*	*39+34*	*33'*	*3*	*52'*	*24*	*24*	*37.0*
							Totals:	*98.7*

Waterway Grade	*Maximum Spacing between Checks*
0 to 1.5 percent	*100 Feet*
1.5 to 3.0 percent	*75 Feet*
Greater than 3 percent	*50 Feet*

modified by Jeff A. Lutz, ET(C)
IOWA STANDARD DWG. NO. 1507

DATE Sept. 2009 | PAGE 1 OF 1

USDA United States Department of Agriculture
Natural Resources Conservation Service

TRAPEZOIDAL ROCK CHECK DETAIL

Owner: Jim McDowell t8559

Location: Sec. 21, T 89 N, R 18 W

German Township

Grundy County, Iowa

Date
Designed *Jeff A. Lutz 7/2025*
Drawn *Jeff A. Lutz 7/2025*
Checked *NAK 2/3/2026*
Approved

File Name

Drawing Name

Sheet *24* of *29*

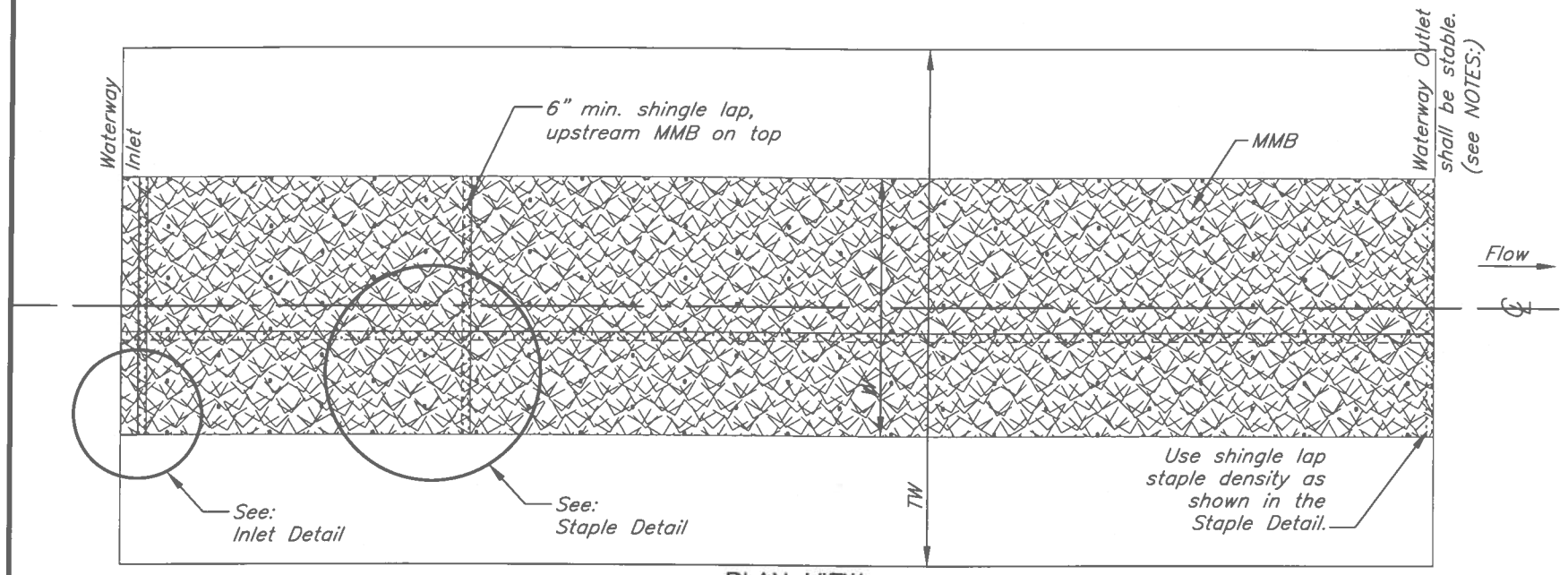

PLAN VIEW

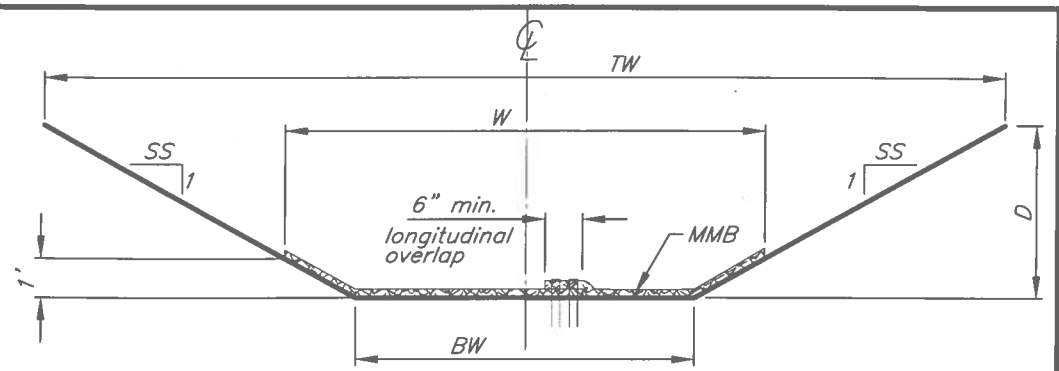

TYPICAL SECTION

NOTES:

1. Products available for manufactured mulch blanket applications are commercially referred to as: ECB – Erosion Control Blanket or RECP – Rolled Erosion Control Product
2. This Standard Drawing complies with NRCS Conservation Practice Standard, 484 Mulching. It shall not be used with NRCS Conservation Practice Standard, 468 Lined Waterway or Outlet.
3. The manufactured mulch blanket (MMB) shall be double netted (top and bottom) with a mulch medium between the nets comprised of one of the following:

   Straw Coconut Fiber Straw/Coconut Fiber Wood Excelsior other:
4. Minimum dry weight per surface area requirements (ASTM D6475) shall be 0.5 lb/sq yd or meet criteria of FHWA FP–03, Rolled Erosion Control Product Type 2.D, short–term double–net erosion control blankets.
5. All constructed finished grades, seedbed preparation, fertilizing, and seeding shall be approved by NRCS before installation of the MMB.
6. MMB shall be laid parallel to the direction of flow. Spread evenly without stretching to allow maximum contact with the soil.
7. U–Staples or Round Top–Single Stem–Wire Staples may be used as directed by the Engineer. U–Staples are to have a 1" crown and be 11 gauge or heavier wire (see Required Staple Length table below for lengths related to soil conditions). Round Top Staples may only be available in 6 inch lengths and not suitable for all soil conditions. Indicate staple to be used:

   U–Staple Round Top–Single Stem Staple
8. Staples shall be inset 1" min. from all blanket edges.
9. Rock backfill shall meet the quality and gradation found in Iowa DOT Standard Specification Section 4130, GABION STONE.

   Compacted earthfill may be used as directed by the Engineer. Earthfill shall be compacted in lifts no greater than 4 inches to a density equivalent to that of the surrounding native soil. Care should be taken to not tear the MMB. Add 1 additional staple row to the top face of the trench backfill, 18" O.C.
10. Lateral waterways with MMB shall be shingle lapped over the Main waterway MMB. Lateral waterways without MMB shall use a shingle lap staple density on the Main waterway MMB edge for a distance equal to the width of the Lateral waterway entering the Main waterway.
11. The Waterway Outlet staple pattern is only allowed for stable outlet conditions (i.e. Lateral into a Main). A waterway requiring a grade stabilization structure shall have the MMB outlet termination anchoring incorporated into the inlet portion of the grade stabilization structure.

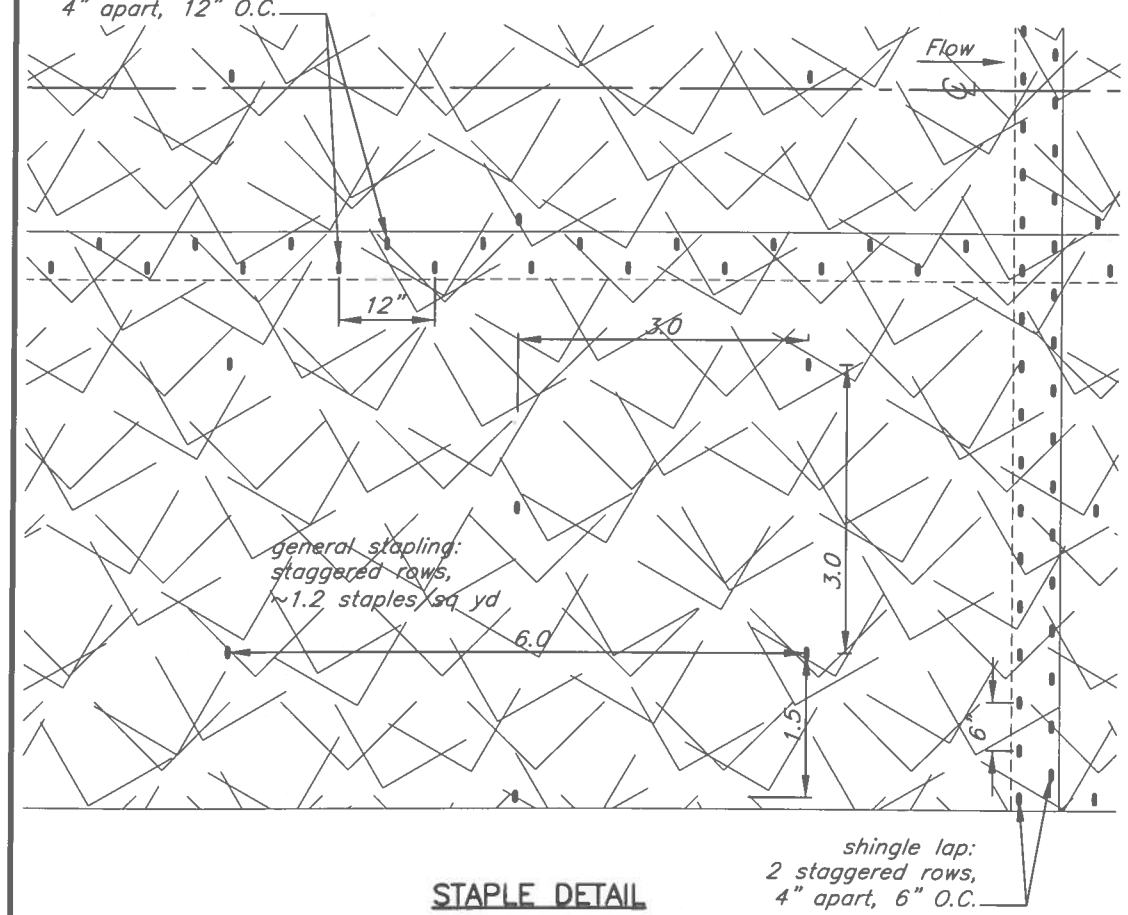

STAPLE DETAIL

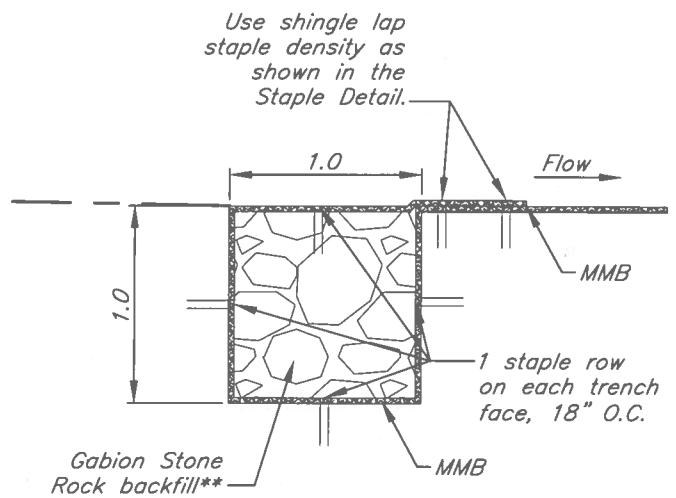

** See Note 9 for earthfill option

INLET DETAIL

Manufactured Mulch Blanket Data

Waterway Number	Start Station	End Station	Staple Length: L (in)	MMB Width: W (ft)	MMB Length (ft)	MMB Plan Area (sq yd)	Staple Quantity (no.)	Rock Quantity (ton)
outlet channel	35+31	35+83	6"	61'	58'	413	1400	3.7
outlet channel	36+30	37+50	6"	61'	126'	896	2400	3.7
outlet channel	37+65	39+10	6"	61'	151'	1074	2700	3.7
					TOTALS:	2383	6500	11.1

Required Staple Length

Soil Condition	L (in)
Highly compacted soils	6
Friable soils	8
Loose or Sandy soils	10

NOT TO SCALE

STANDARD DWG. IA–1521

DATE: June 2019 | SHEET 1 OF 1

Date
Designed Jeff A. Lutz 07/2025
Drawn Jeff A. Lutz 01/2026
Checked JAK 2/2026
Approved

Manufactured Mulch Blanket (MMB) for Trapezoidal Grassed Waterways

Grundy County, Iowa

Jim McDowell t8559

United States Department of Agriculture

Natural Resources Conservation Service

File No.

Drawing No.

Sheet 25 of 29

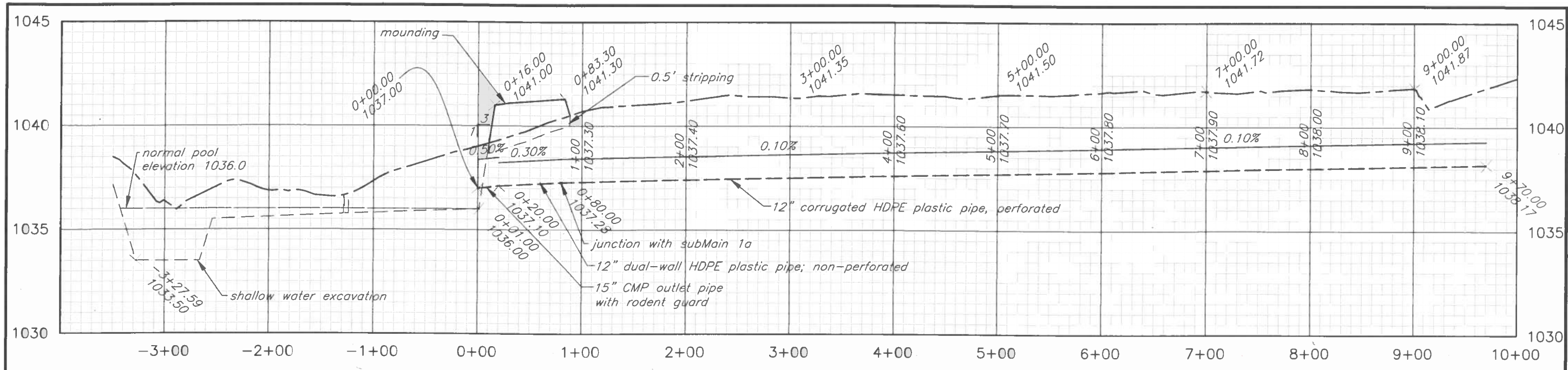

H–H N interception line 1 west N excavation PROFILE

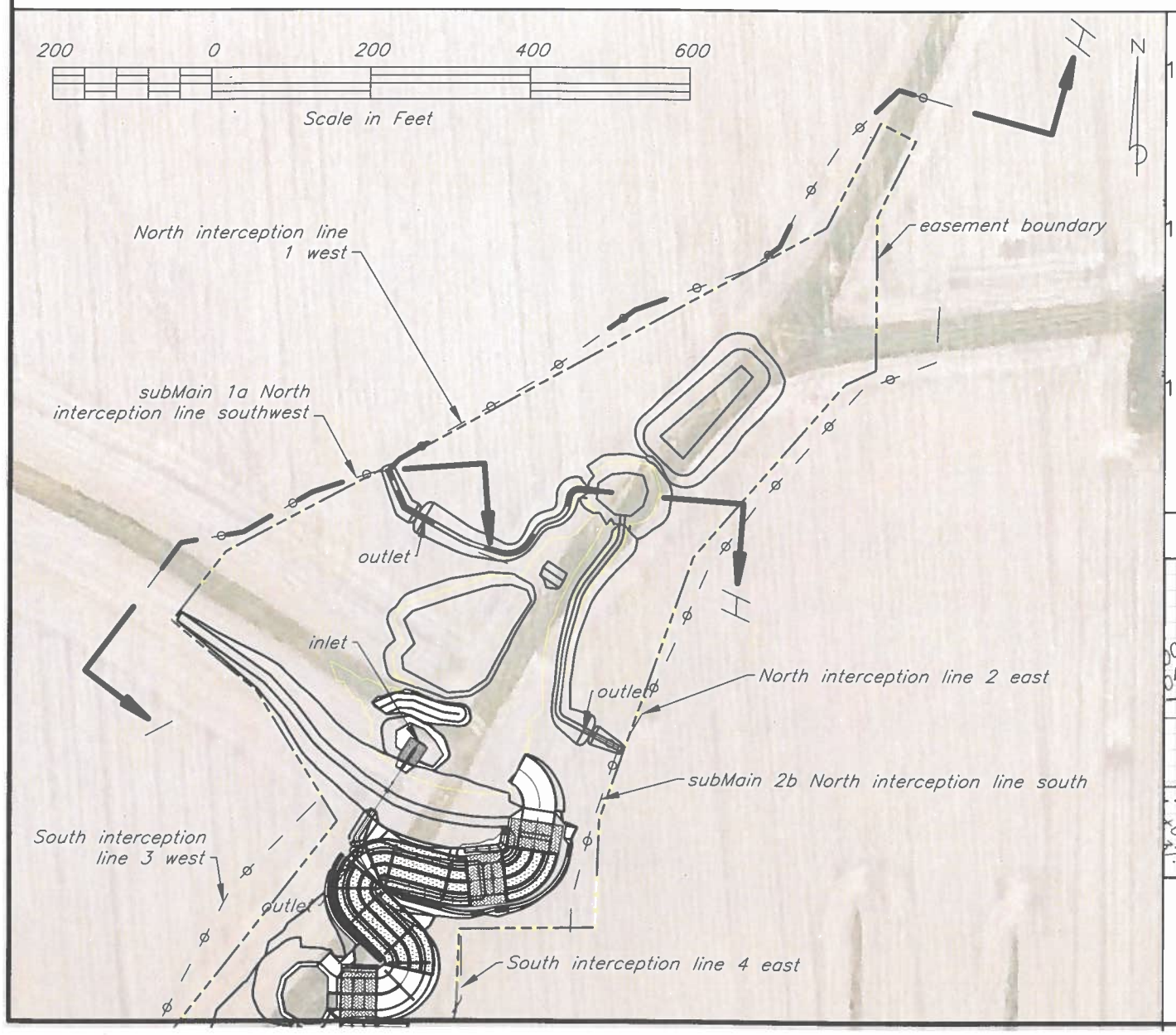

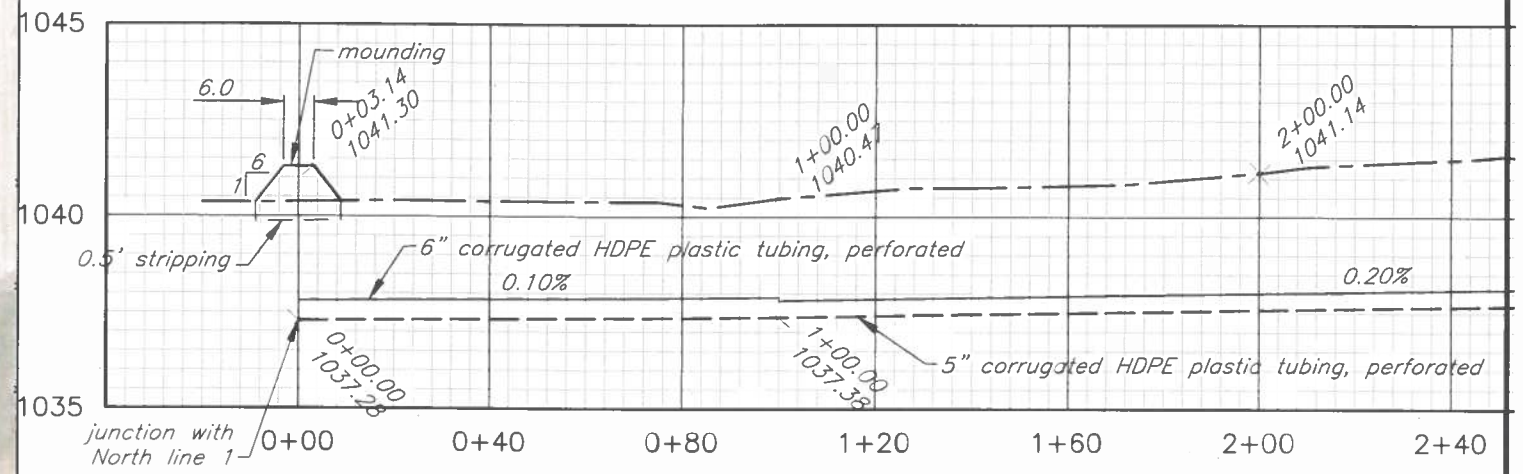

/—/ subMain 1a N interception line southwest PRO

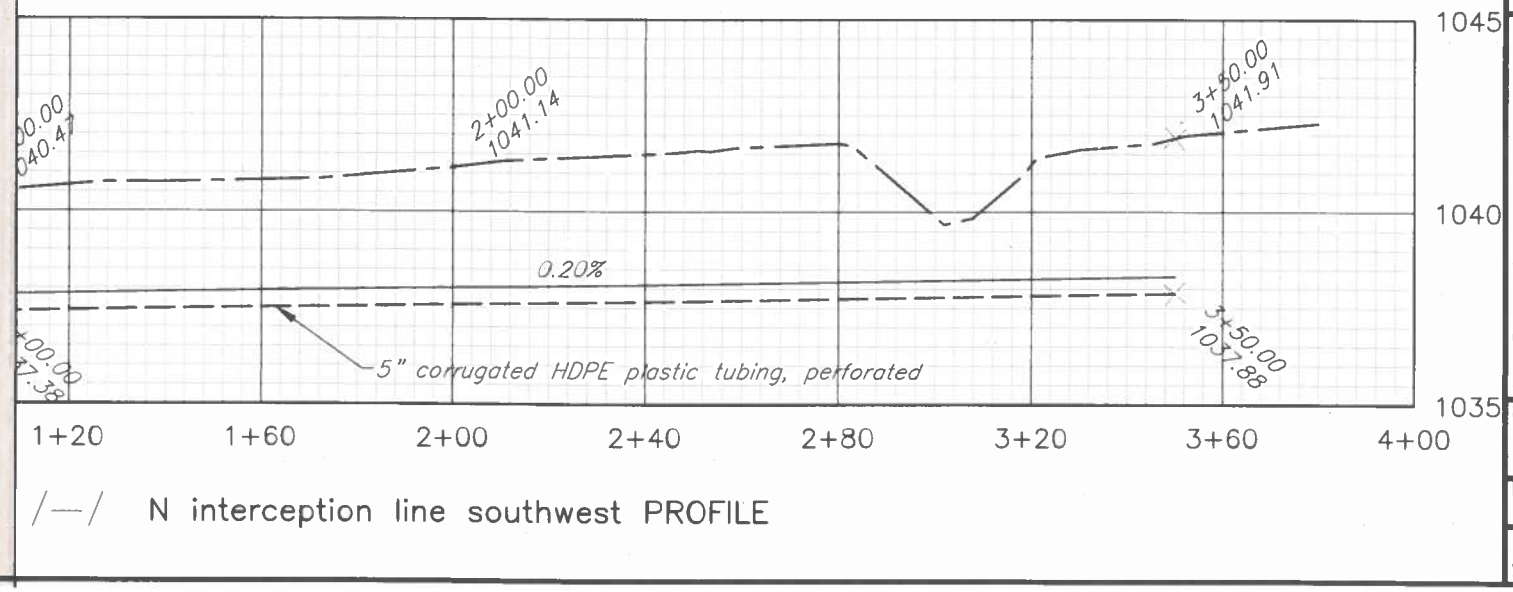

/—/ N interception line southwest PROFILE

Jim McDowell t8559
Constructed Wetland

PROFILES NORTH INTERCEPTION LINE 1 WEST & subMain 1a

NW¼ sec. 21 T.89N.–R.18W. German twp. Grundy County, Iowa

		Date
Designed	Jeff A. Lutz	6/2025
Drawn	Jeff A. Lutz	1/2026
Checked	NAK	2/3/2026
Approved		

United States Department of Agriculture
Natural Resources Conservation Service

File No. Jim McDowell t8559 constructed wetland

Drawing No. GRUNDY.dwg

Sheet 26 of 29

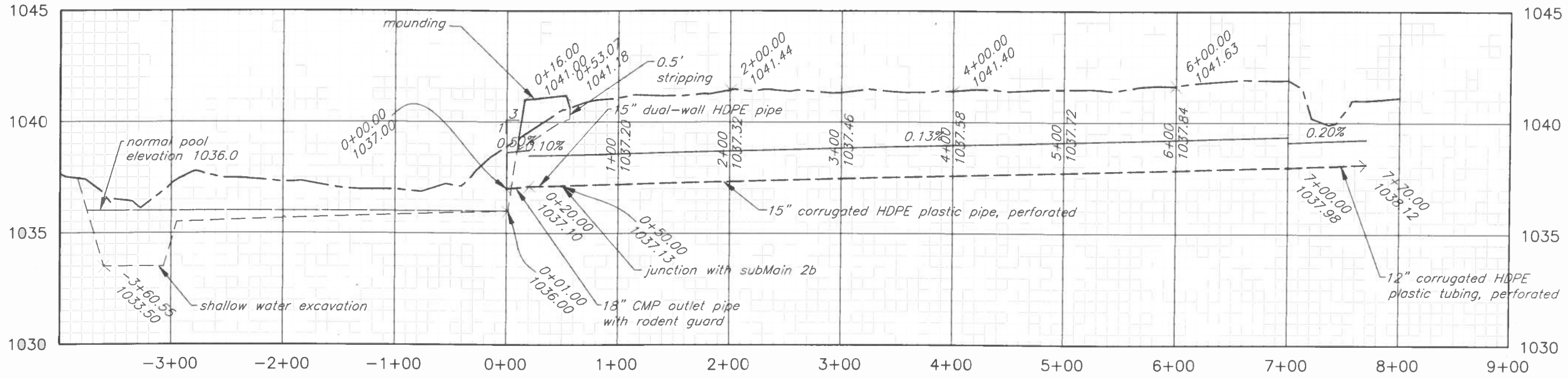

J—J N interception line 2 east N excavation PROFILE

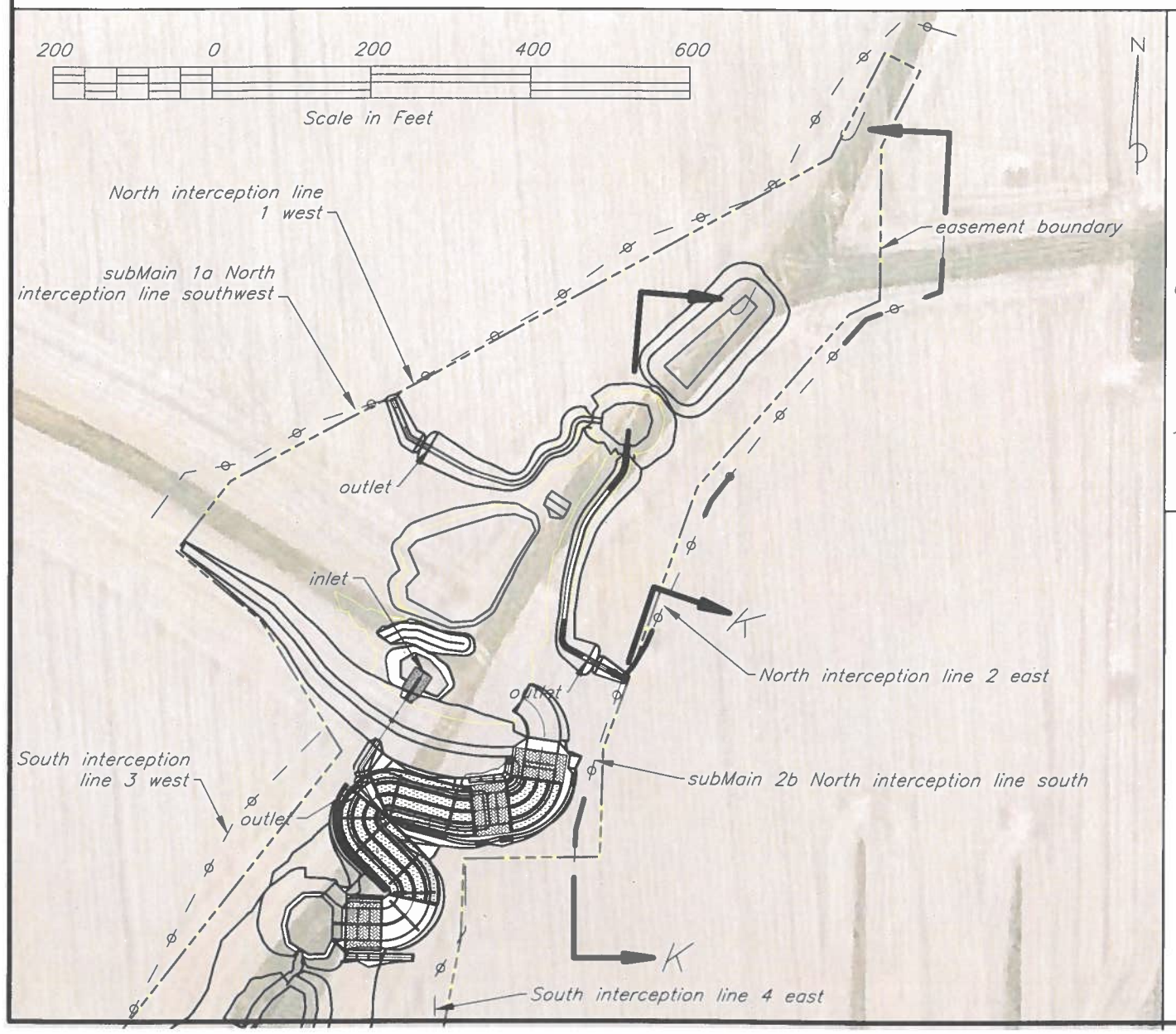

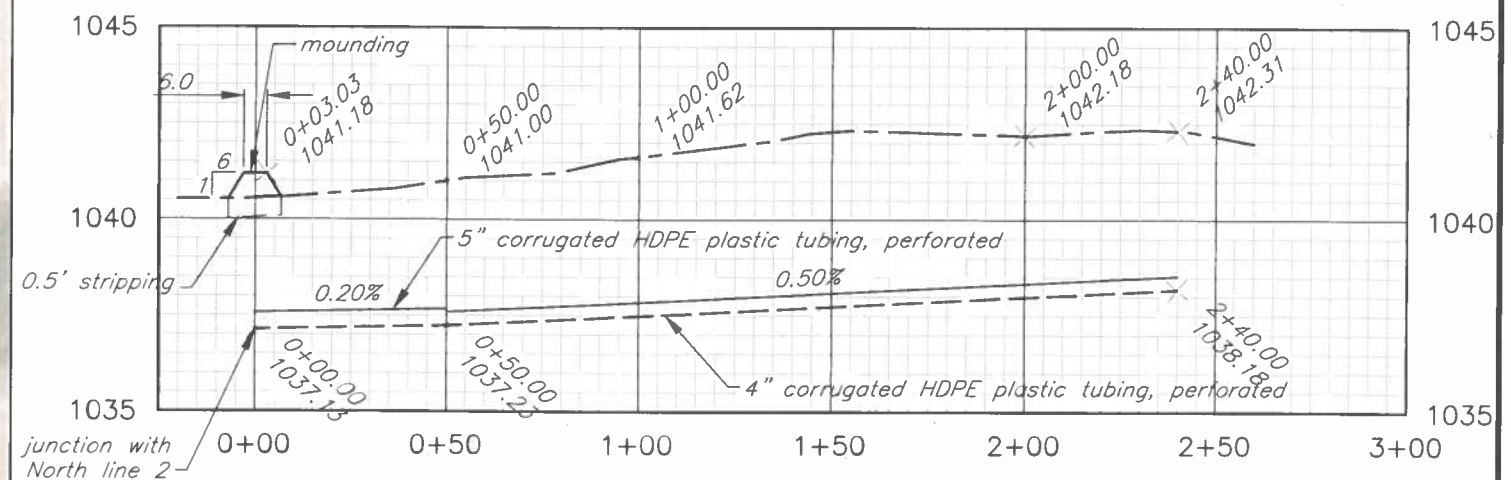

K—K subMain 2b N interception line south PROFILE

Jim McDowell t8559
Constructed Wetland
PROFILES NORTH INTERCEPTION LINE 2 EAST & subMain 2b
NW¼ sec. 21 T.89N.–R.18W. Germon twp. Grundy County, Iowa

	Date
Designed Jeff A. Lutz	6/2025
Drawn Jeff A. Lutz	1/2026
Checked NAK	2/3/2026
Approved	

United States Department of Agriculture
Natural Resources Conservation Service

File No. Jim McDowell t8559 constructed wetland
Drawing No. GRUNDY.dwg

Sheet 27 of 29

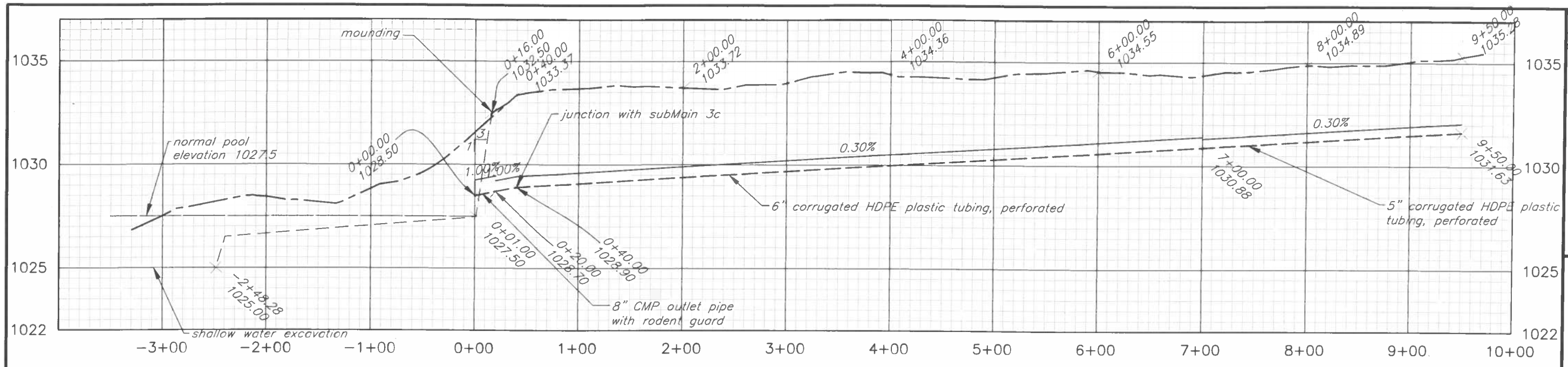

L—L S interception line 3 west S excavation PROFILE

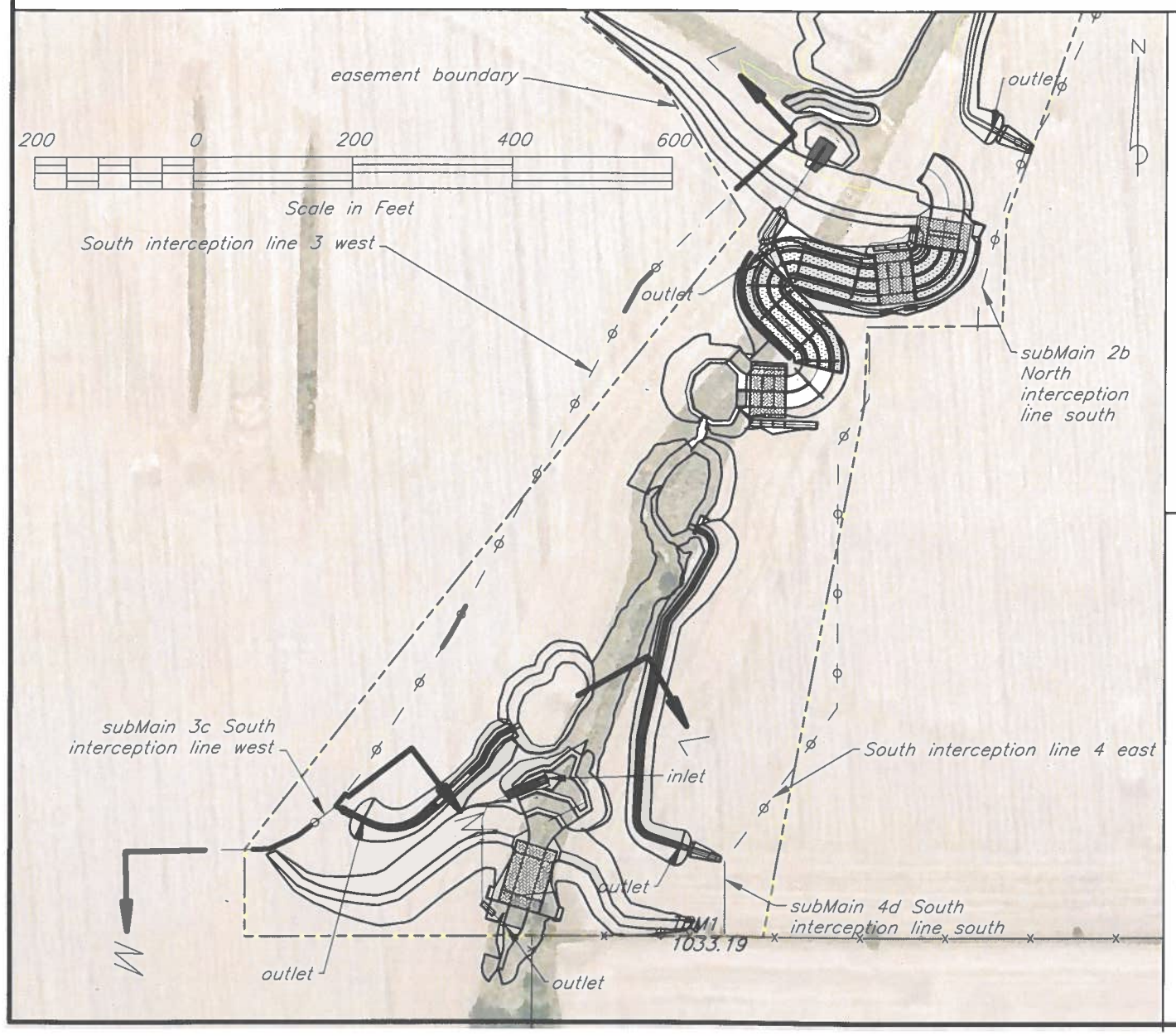

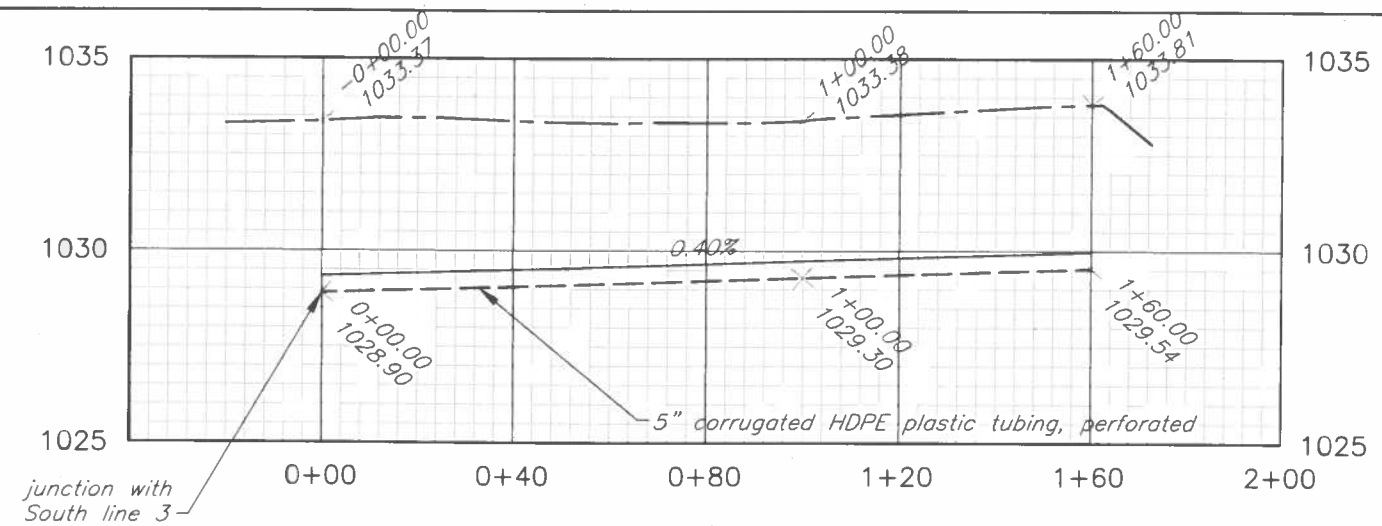

M—M subMain 3c S interception line west PROFILE

Jim McDowell t8559
Constructed Wetland

PROFILES SOUTH INTERCEPTION LINE 3 WEST & subMain 3c

NW¼ sec. 21 T.89N.–R.18W. German twp. Grundy County, Iowa

		Date
Designed	Jeff A. Lutz	7/2025
Drawn	Jeff A. Lutz	1/2026
Checked	NAK	2/3/2026
Approved		

United States Department of Agriculture
Natural Resources Conservation Service

File No. Jim McDowell t8559 constructed wetland
Drawing No. GRUNDY.dwg

Sheet 28 of 29

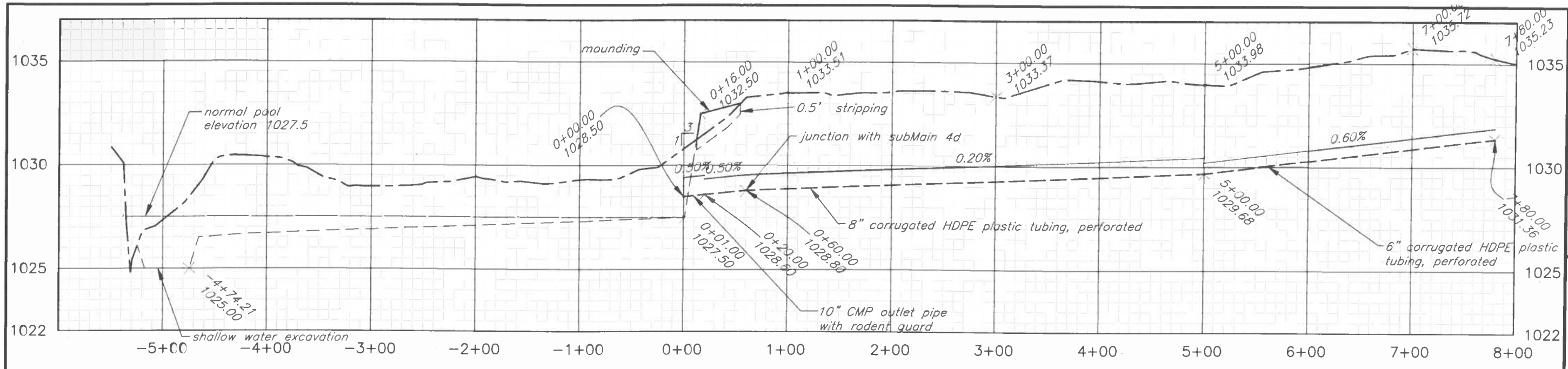

N—N S interception line 4 east S excavation PROFILE

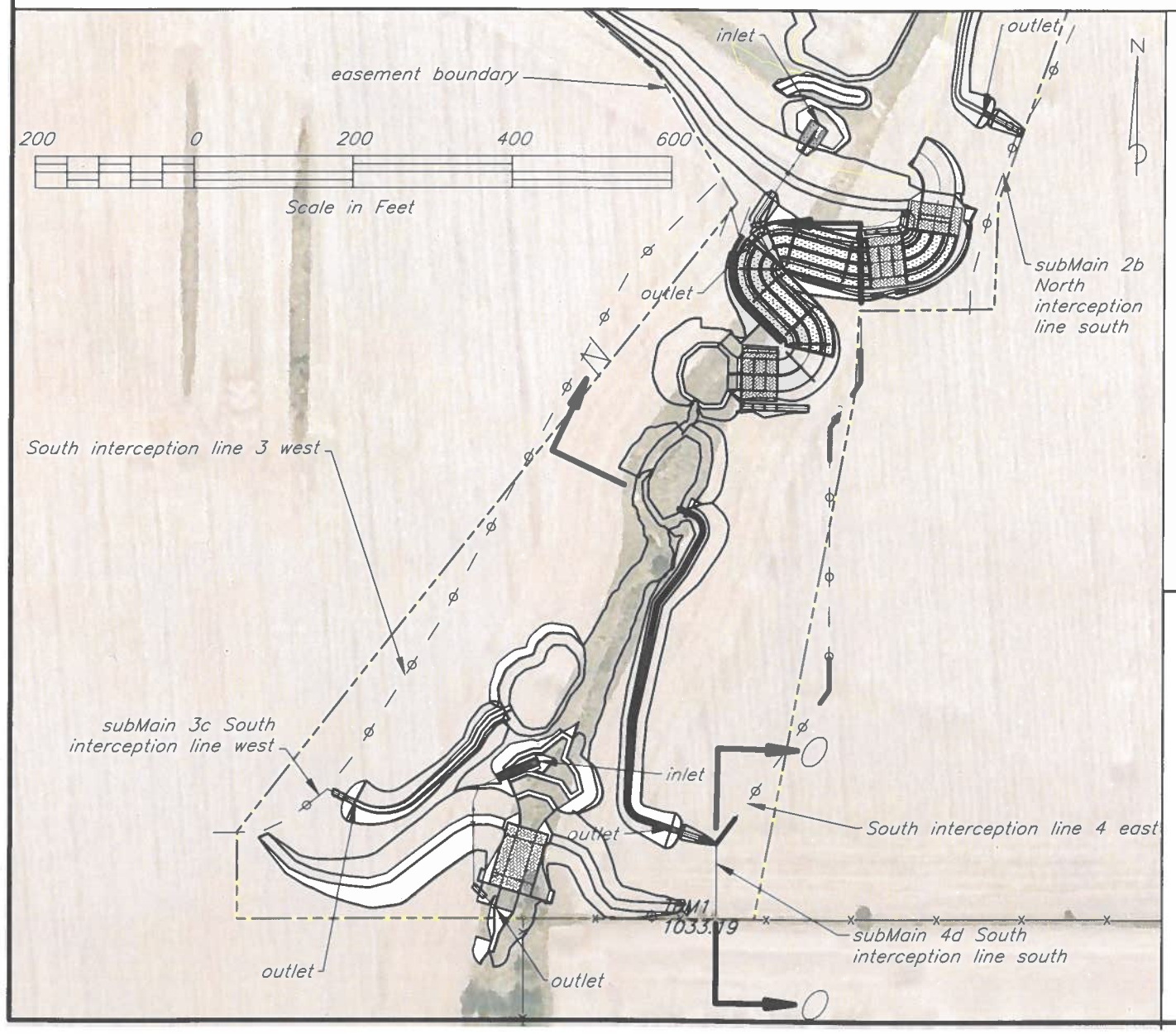

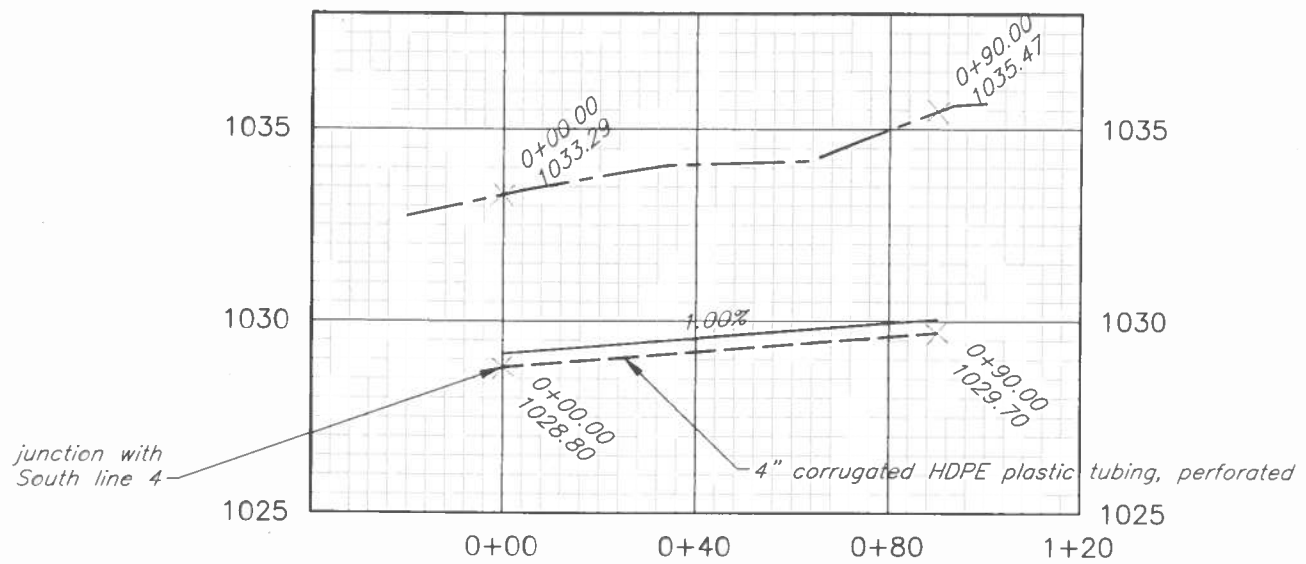

O—O subMain 4d S interception line south PROFILE

Jim McDowell t8559
Constructed Wetland
PROFILES SOUTH INTERCEPTION LINE 4 EAST & subMain 4d
NW¼ sec. 21 T.89N.–R.18W. German twp. Grundy County, Iowa

Date	
Designed Jeff A. Lutz	7/2025
Drawn Jeff A. Lutz	1/2026
Checked NAK	2/3/2026
Approved	

United States Department of Agriculture
Natural Resources Conservation Service

File No. Jim McDowell t8559 constructed wetland
Drawing No. GRUNDY.dwg

Sheet 29 of 29

USDA NRCS
Natural Resources Conservation Service

IA - CPA - 4 REV.
May-03
(File Code 180-12-12)

Seeding Plan

Name Jim McDowell (Structural Areas) Date 11-18-2025 Tract No. 8559
Field No.
Contract No.

Type of Seeding: **Introduced Grasses (Critical Area)** Prepared by Heather Kitzman, RC

PROGRAM:

***Seeding Percent Pure Live Seed=(% Germination + Hard Seed) * % Purity**
100

SUBSTITUTION OF SPECIES OR OTHER VARIATIONS FROM THE SEEDING PLAN NEED TO BE APPROVED IN ADVANCE

Enter Acres: → 3.03

Species	Acres	Pounds Per Acre - Circle One Below (Bulk) - PLS*		Total Needed	
Smooth Bromegrass (80%)	3.03	20	Pounds	61	Pounds
Red Top (20%)	3.03	2	Pounds	6	Pounds
Oats	3.03	1.5	Bushels	5	Bushels
		x	General		
Fertilizer & Lime			Soil Test		
Lime (ECCE)		1000	Pounds	0	Pounds
Nitrogen		50	Pounds	0	Pounds
Phosphate (P205)		50	Pounds	0	Pounds
Potash (K20)		50	Pounds	0	Pounds

Seeding will be completed: ☑ March 1 - May 15 ☐ August 1 - September 15 ☐ November 15 - Freeze-up

Additional Seeding Criteria Seed approximately 1/4" deep into a firm seedbed.

Seeding was completed by _____ (Date)

_____ (Producer's Signature) _____ (Date)

Field Office _____ **Certified by** _____ (NRCS Representative)

When seeding is completed, return seeding plan to the Natural Resources Conservation Services. For state cost-share projects, attach receipts for seed, fertilizer, lime and mulch. For Federal cost-share, return receipts to Farm Service Agency.

Iowa NRCS
Supplement to Seeding Plan (IA-CPA-4)
Conservation Cover (327) Native Plant Seeding

Name: Jim McDowell (Wetland Buffer Mix) County: Grundy

Field Number(s): _____ Acres: 2.72 Tract: 8559

The client is responsible to ensure the seeding mix meets the conservation practice standard and conservation program requirements (if applicable). If the seeding mix is changed in any way, the client is responsible to ensure the updated seeding mix is approved by an NRCS Planner. Seeding mixes can be emailed to the conservation planner listed below. Clients are encouraged to work with their seed dealer to use the Iowa Native Seeding Calculator to make the approval process more efficient. The Iowa Native Seeding Calculator can be found at https://bit.ly/IANRCSNativeSeedingCalculator. Seeding a mixture that is not approved and does not meet conservation and/or program requirements could be denied financial assistance (cost share) and may result in a conservation program violation.

By signing, you are acknowledging:

a. **I received a seeding plan from NRCS.**
b. **I understand if changes to the plan are made, the changes need to be approved by an NRCS planner prior to purchase.**
c. **Updated seeding mixes can be sent by you or your seed dealer to the NRCS planner below.**
d. **If an unapproved seeding mix is planted, eligible cost share assistance may be denied.**

Client Signature **Date**

Conservation Program (if applicable): _____

Contract # (if applicable): _____

CRP Practice (if applicable): _____

Seeding Purpose(s): Wetland Restoration _____

Moisture Regime: Wet/Mesic

Local Ecotype Required*: No

***As defined by Iowa Agronomy Technical Note #28**

Nurse Crop Required: No

Full Seeding or Interseeding: Full Seeding

Seeding Rate (seeds/sq. ft.): 40

Grass to Forb Ratio (seeds/sq. ft.): 30:10

Minimum Number of Forb Species: 2

Non-Native Forbs Allowed: No

Minimum Number of Grass Species: 3

Preferred Growth Form: Mix (Tall and Short)

Planned Seeding Date: Spring (April 1 - July 1)

Seeding Dates for Native Species

Spring	April 1 - July 1
Dormant	November 15 - March 31
Frost*	February 1 - March 31

*Debearded or smooth seed required for frost seeding.

USDA is an equal opportunity provider, employer, and lender

Requirements for all seedings:

- Minimum full seeding rate for native plants is 40 seeds/sq. ft.
- Minimum of 10 seeds/sq. ft. of the mixture must be grass.
- Maximum of 4 switchgrass and 8 canada wildrye seeds/sq. ft. unless otherwise specified.
- When allowed, mixtures may include up to 20% introduced forbs, which no one species will comprise more that 10% of the total mix.
- Introduced forbs are not recommended for prairie restoration efforts.
- Maximum of 20% of the forb component may be annual/biennial forbs.

Select Additional Requirement(s) (if applicable):

Additional Seeding Plan Information:

Conservation Planner: Heather Kitzman, Resource Conservationist Date: **11/18/2025**

Phone Number: 319-541-7013 email: heather.kitzman@usda.gov

Sheet 2A of 4

USDA is an equal opportunity provider, employer, and lender

USDA NRCS
Natural Resources Conservation Service

IA - CPA - 4 REV
September 2022
(File Code 180-12-12)

Seeding Plan

Name Prepared by: **Jim McDowell (Wetland Buffer Mix)**, **Heather Kitzman, Resource Conservationist**

Program: _____

Acres: 2.72

Date: **11/18/2025**
Tract No.: **8559**
Field No.: _____
Contract No: _____
Moisture Regime: Wet/Mesic

Seeding Mix Summary

Grasses	Scientific Name	Common Name	Seeds/Ft²	PLS Lbs/Acre	PLS Lbs Total
1	*Andropogon gerardii*	Big Bluestem	3.000	0.817	2.22
2	*Elymus virginicus*	Virginia Wildrye	1.500	0.972	2.64
3	*Carex hystericina*	Porcupine Sedge	0.100	0.009	0.025
4	*Carex bebbii*	Bebb's Sedge	0.100	0.008	0.022
5	*Carex annectens*	Yellow Fox Sedge	0.500	0.015	0.041
6	*Carex lurida*	Lurid Sedge	0.050	0.011	0.031
7	*Carex vulpinoidea*	Fox Sedge	8.000	0.218	0.59
8	*Poa palustris*	Fowl Bluegrass	5.165	0.108	0.29
9	*Glyceria striata*	Fowl Mannagrass	0.500	0.009	0.023
10	*Leersia oryzoides*	Rice Cutgrass	0.050	0.004	0.011
11	*Spartina pectinata*	Prairie Cordgrass	0.050	0.021	0.056
12	*Scirpus atrovirens*	Dark Green Bulrush	5.000	0.030	0.080
13	*Scirpus cyperinus*	Woolgrass	5.000	0.008	0.022
14	*Muhlenbergia racemosa*	Marsh Muhly	1.000	0.034	0.093
		SUBTOTAL GRASSES	**30.015**	**2.263**	**6.156**

Forbs/Legumes	Scientific Name	Common Name	Seeds/Ft²	PLS Lbs/Acre	PLS Lbs Total
1	*Verbena hastata*	Blue Vervain	1.000	0.029	0.080
2	*Helenium autumnale*	Sneezeweed	1.000	0.021	0.057
3	*Lobelia cardinalis*	Cardinal Flower	0.500	0.003	0.0093
4	*Ludwigia alternifolia*	Seedbox	1.740	0.004	0.0099
5	*Silphium perfoliatum*	Cup Plant	0.010	0.019	0.053
6	*Lythrum alatum*	Winged Loosestrife	1.500	0.001	0.0037
7	*Hypericum ascyron*	Great St. John's Wort	1.500	0.021	0.058
8	*Lobelia siphilitica*	Great Blue Lobelia	0.500	0.003	0.0074
9	*Bidens cernua*	Nodding Bur Marigold	0.050	0.006	0.018
10	*Mimulus ringens*	Square-stemmed Monkeyflower	1.500	0.002	0.0048
11	*Vernonia fasciculata*	Ironweed	0.200	0.023	0.062
12	*Symphyotrichum novae-angliae*	New England Aster	0.100	0.004	0.011
13	*Oligoneuron riddellii*	Riddell's Goldenrod	0.100	0.003	0.0080
14	*Eupatorium perfoliatum*	Boneset	0.100	0.002	0.0046
15	*Helianthus grosseserratus*	Saw-tooth Sunflower	0.050	0.009	0.025
16	*Eutrochium maculatum*	Spotted Joe Pye Weed	0.100	0.003	0.0078
17	*Asclepias incarnata*	Swamp Milkweed	0.050	0.028	0.077
		SUBTOTAL FORBS	**10.000**	**0.182**	**0.496**

Woody	Scientific Name	Common Name	Seeds/Ft²	PLS Lbs/Acre	PLS Lbs Total
		SUBTOTAL VINES/WOODY	**0.000**	**0.000**	**0.000**
		TOTAL	**40.015**	**2.446**	**6.652**

Estimated Cost/Acre _____ **Estimated Total Cost** $0.00

	Soil Test Information	Total Needed lbs
Lime (ECCE) (Actual Lime)		
Nitrogen		
Phosphate (P205)		
Potash (K20)		

Seeding Dates: Spring (April 1 - July 1)

Additional Seeding Criteria: Seed approximately 1/4" deep into a firm seedbed. Mow 2-3 times each year for the first 2 years to control weeds.

Seeding was completed by _____ (Date) **according to the above requirements.**

_____ (Producer's Signature)

_____ (Date)

Field Office _____

Certified by _____ (NRCS Representative)

When seeding is completed, return seeding plan to the Natural Resources Conservation Services.
For CRP cost-share, return receipts to Farm Service Agency.
For all other cost-share projects, attach seed tags and receipts for seed, fertilizer, lime, etc.

Iowa NRCS
Supplement to Seeding Plan (IA-CPA-4)
Conservation Cover (327) Native Plant Seeding

Name: Jim McDowell (Uplands Mix) County: Grundy

Field Number(s): _____ Acres: 8.72 Tract: 8559

The client is responsible to ensure the seeding mix meets the conservation practice standard and conservation program requirements (if applicable). If the seeding mix is changed in any way, the client is responsible to ensure the updated seeding mix is approved by an NRCS Planner. Seeding mixes can be emailed to the conservation planner listed below. Clients are encouraged to work with their seed dealer to use the Iowa Native Seeding Calculator to make the approval process more efficient. The Iowa Native Seeding Calculator can be found at https://bit.ly/IANRCSNativeSeedingCalculator. Seeding a mixture that is not approved and does not meet conservation and/or program requirements could be denied financial assistance (cost share) and may result in a conservation program violation.

By signing, you are acknowledging:

a. **I received a seeding plan from NRCS.**
b. **I understand if changes to the plan are made, the changes need to be approved by an NRCS planner prior to purchase.**
c. **Updated seeding mixes can be sent by you or your seed dealer to the NRCS planner below.**
d. **If an unapproved seeding mix is planted, eligible cost share assistance may be denied.**

_____ _____
Client Signature **Date**

Conservation Program (if applicable): _____
Contract # (if applicable): _____

CRP Practice (if applicable): _____

Seeding Purpose(s): Wetland Restoration _____

Moisture Regime: Dry/Mesic

Local Ecotype Required*: No
***As defined by Iowa Agronomy Technical Note #28**

Nurse Crop Required: No

Full Seeding or Interseeding: Full Seeding

Seeding Rate (seeds/sq. ft.): 40

Grass to Forb Ratio (seeds/sq. ft.): 30:10

Minimum Number of Forb Species: 2

Non-Native Forbs Allowed: No

Minimum Number of Grass Species: 3

Preferred Growth Form: Mix (Tall and Short)

Planned Seeding Date: Spring (April 1 - July 1)

Seeding Dates for Native Species

Spring	April 1 - July 1
Dormant	November 15 - March 31
Frost*	February 1 - March 31

*Debearded or smooth seed required for frost seeding.

USDA is an equal opportunity provider, employer, and lender

Requirements for all seedings:

- Minimum full seeding rate for native plants is 40 seeds/sq. ft.
- Minimum of 10 seeds/sq. ft. of the mixture must be grass.
- Maximum of 4 switchgrass and 8 canada wildrye seeds/sq. ft. unless otherwise specified.
- When allowed, mixtures may include up to 20% introduced forbs, which no one species will comprise more that 10% of the total mix.
- Introduced forbs are not recommended for prairie restoration efforts.
- Maximum of 20% of the forb component may be annual/biennial forbs.

Select Additional Requirement(s) (if applicable):

Additional Seeding Plan Information:

Conservation Planner: Heather Kitzman, Resource Conservationist Date: **11/18/2025**

Phone Number: 319-541-7013 email: heather.kitzman@usda.gov

Sheet 3.A of 4

USDA is an equal opportunity provider, employer, and lender

USDA NRCS
Natural Resources Conservation Service

IA - CPA - 4 REV.
September 2022
(File Code 180-12-12)

Seeding Plan

Name: **Jim McDowell (Uplands Mix)**
Prepared by: **Heather Kitzman, Resource Conservationist**
Program: _____
Acres: 8.72

Date: **11/18/2025**
Tract No.: **8559**
Field No.: _____
Contract No.: _____
Moisture Regime: Dry/Mesic

Seeding Mix Summary

Grasses	Scientific Name	Common Name	Seeds/Ft²	PLS Lbs/Acre	PLS Lbs Total
1	*Andropogon gerardii*	Big Bluestem	4.000	1.089	9.50
2	*Sorghastrum nutans*	Indiangrass	3.000	0.681	5.94
3	*Elymus virginicus*	Virginia Wildrye	1.500	0.972	8.48
4	*Panicum virgatum*	Switchgrass	4.000	0.778	6.78
5	*Sporobolus compositus*	Rough Dropseed	8.000	0.726	6.33
6	*Carex annectens*	Yellow Fox Sedge	1.500	0.045	0.40
7	*Carex vulpinoidea*	Fox Sedge	8.000	0.218	1.90
		SUBTOTAL GRASSES	**30.000**	**4.509**	**39.318**

Forbs/Legumes	Scientific Name	Common Name	Seeds/Ft²	PLS Lbs/Acre	PLS Lbs Total
1	*Rudbeckia hirta*	Black-eyed Susan	2.000	0.059	0.52
2	*Ratibida pinnata*	Gray-headed Coneflower	1.000	0.091	0.79
3	*Helenium autumnale*	Sneezeweed	2.190	0.046	0.40
4	*Lythrum alatum*	Winged Loosestrife	1.500	0.001	0.012
5	*Physostegia virginiana*	Obedient Plant	0.100	0.012	0.11
6	*Pycnanthemum virginianum*	Virginia Mountain Mint	0.300	0.004	0.032
7	*Verbena hastata*	Blue Vervain	0.200	0.006	0.051
8	*Silphium perfoliatum*	Cup Plant	0.010	0.019	0.17
9	*Hypericum ascyron*	Great St. John's Wort	1.500	0.021	0.19
10	*Zizia aurea*	Golden Alexander's	0.200	0.050	0.43
11	*Penstemon digitalis*	Foxglove Beardtongue	0.300	0.006	0.055
12	*Parthenium integrifolium*	Wild Quinine	0.050	0.019	0.17
13	*Eryngium yuccifolium*	Rattlesnake Master	0.050	0.018	0.16
14	*Coreopsis tripteris*	Tall Coreopsis	0.050	0.010	0.085
15	*Rudbeckia subtomentosa*	Sweet Coneflower	0.300	0.019	0.17
16	*Gentiana alba*	Cream Gentian	0.050	0.001	0.0085
17	*Asclepias incarnata*	Swamp Milkweed	0.100	0.057	0.49
18	*Vernonia fasciculata*	Ironweed	0.100	0.011	0.099
		SUBTOTAL FORBS	**10.000**	**0.451**	**3.934**

Woody	Scientific Name	Common Name	Seeds/Ft²	PLS Lbs/Acre	PLS Lbs Total
		SUBTOTAL VINES/WOODY	**0.000**	**0.000**	**0.000**
		TOTAL	**40.000**	**4.960**	**43.253**

Estimated Cost/Acre _____ **Estimated Total Cost** $0.00

	Soil Test Information	Total Needed lbs
Lime (ECCE) (Actual Lime)		
Nitrogen		
Phosphate (P205)		
Potash (K20)		

Seeding Dates: Spring (April 1 - July 1)

Additional Seeding Criteria: Seed approximately 1/4" deep into a firm seedbed. Mow 2-3 times each year for the first 2 years to control weeds.

Seeding was completed by _____ **according to the above requirements.**
(Date)

_____ _____
(Producer's Signature) (Date)

Field Office _____ **Certified by** _____
(NRCS Representative)

When seeding is completed, return seeding plan to the Natural Resources Conservation Services.
For CRP cost-share, return receipts to Farm Service Agency.
For all other cost-share projects, attach seed tags and receipts for seed, fertilizer, lime, etc.

N

pool elevation 1036.0
area 12,388 sq. ft.
0.28 acre

easement area 758,952 sq. ft.
17.42 acres

pool elevation 1036.0
area 64,359 sq. ft.
1.48 acres

pool elevation 1027.5
area 54,884 sq. ft.
1.26 acres

1033.19

distrubed area outside of easement 0.07 acre

Critical Area Planting (structural areas)	green	3.03 acres
Wet Mesic (buffer mix)	blue	2.72 acres
Dry Mesic (uplands mix)	orange	8.72 acres
Pool areas (not to be seeded)	pink	3.02 acres

200 0 200 400 600

Scale in Feet

PLAN VIEW SEEDINGS

Constructed Wetland for nitrate reduction day-lighted tile

Jim McDowell t8559

NW¼ sec. 21 T.89N.-R.18W. German twp. Grundy County, IA

		Date
Designed	Jeff A. Lutz	9/2025
Drawn	Jeff A. Lutz	9/2025
Checked		
Approved		

United States Department of Agriculture

Natural Resources Conservation Service

File No. Jim McDowell t8559 constructed wetland 2025 Grundy.dwg

Drawing No.

Sheet 4 of 4