FOODSERVICE EQUIPMENT SCHEDULE - AREA C

ITEM #	QTY	DESCRIPTION	REMARKS
100	7	HAND SINK	
101A	5	PAN STORAGE SHELVING	
101B	6	PAN STORAGE SHELVING	EXISTING/OWNER TO RELOCATE
102	3	MOBILE LUG RACK	
103	1	UTILITY CART	EXISTING/OWNER TO RELOCATE
104	1	WORKCOUNTER W/SINKS	
105	8	MOBILE TRASH BIN	EXISTING/OWNER TO RELOCATE
106	1	OPEN NUMBER	
107	1	SPRAY RINSE	
108	1	WALL SHELF	
109	1	FOOD PROCESSOR	EXISTING/OWNER TO RELOCATE
110	1	OPEN NUMBER	
111	21	STAINLESS STEEL CORNER GUARD	
112	1	REACH-IN REFRIGERATOR, 2-SEC.	EXISTING/RELOCATE
113	1	MOBILE EQUIPMENT STAND	
114	1	SLICER	EXISTING/OWNER TO RELOCATE
115	2	DOUBLE WIDE WORKTABLE	
116	1	HORIZONTAL CUTTER/MIXER	ADD ALTERNATE
117	1	FLOOR TROUGH	
118	1	HOSE STATION	
119	1	HOSE STATION SECURITY CABINET	
120-127	1	OPEN NUMBER	
128	5	CHEMICAL STORAGE SHELVING	
129	1	MOBILE WORKTABLE	
130	1	OPEN NUMBER	
131	2	CHEMICAL STORAGE SHELVING	EXISTING/OWNER TO RELOCATE
132	1	STACKED WASHER/DRYER	
133	1	OPEN NUMBER	
134	3	STAINLESS STEEL WALL CAP	
135-139	1	OPEN NUMBER	
140	2	MOBILE WORKTABLE	
141	2	WORKCOUNTER	EXISTING/RELOCATE/MODIFY
142	5	MOBILE WARMING CABINET	
143	16	MOBILE RACK	EXISTING/OWNER TO RELOCATE
144	1	80 QUART MIXER	EXISTING/RELOCATE
145	1	WORKCOUNTER W/SINKS	
146	1	WORKCOUNTER W/SINKS	
147	2	SHEET PAN DOLLY	
148	1	EXHAUST HOOD (TYPE I)	
149	1	STAINLESS STEEL WALL PANEL	
150	1	UTILITY DISTRIBUTION SYSTEM	
151	1	FIRE PROTECTION SYSTEM	
152	1	OPEN NUMBER	
153	1	DEMAND CONTROL VENTILATION SYSTEM	
154	2	60 GALLON KETTLE	
155	2	80 GALLON KETTLE	
156	1	FLOOR TROUGH	
157	1	OPEN NUMBER	
158	2	STEAMER, 2-SEC.	EXISTING/RELOCATE
159	1	OPEN NUMBER	
160	1	STEAMER, 2-SEC.	EXISTING/RELOCATE
161	1	STEAMER, 2-SEC.	
162	1	HOSE REEL	
163	2	RACK OVEN, 2-SEC.	
164	2	OVEN RACK, DOUBLE	
165-167	1	OPEN NUMBER	
168	3	HOSE REEL SECURITY CABINET	
169	1	FIRE PROTECTION SYSTEM	
170	1	FIRE PROTECTION SYSTEM	
171	1	OPEN NUMBER	
172	2	POT AND PAN CART	
173	1	POT & PAN SINK	
174	1	DISPOSER	
175	1	SPRAY RINSE	
176-180	1	OPEN NUMBER	
181	1	CART WASH STAINLESS STEEL WALL PANEL	
182	1	HOSE STATION	
183	1	FLOOR TROUGH	
184	2	HOSE REEL	
185	2	EYE/FACE WASH STATION	
186	1	SOILED DISHTABLE	
187	2	DISPOSER	
188	1	HOSE STATION SECURITY CABINET	
189	1	FLIGHT-TYPE DISHMACHINE W/DRYER	
190	1	EXHAUST DUCT RISER	
191	2	SPRAY RINSE	
192	1	FLOOR TROUGH	
193	12	DRYING RACK	EXISTING/OWNER TO RELOCATE
194	1	FLOOR TROUGH	
195	1	CONDENSATE HOOD	

LEGEND

DENOTES EXISTING EQUIPMENT

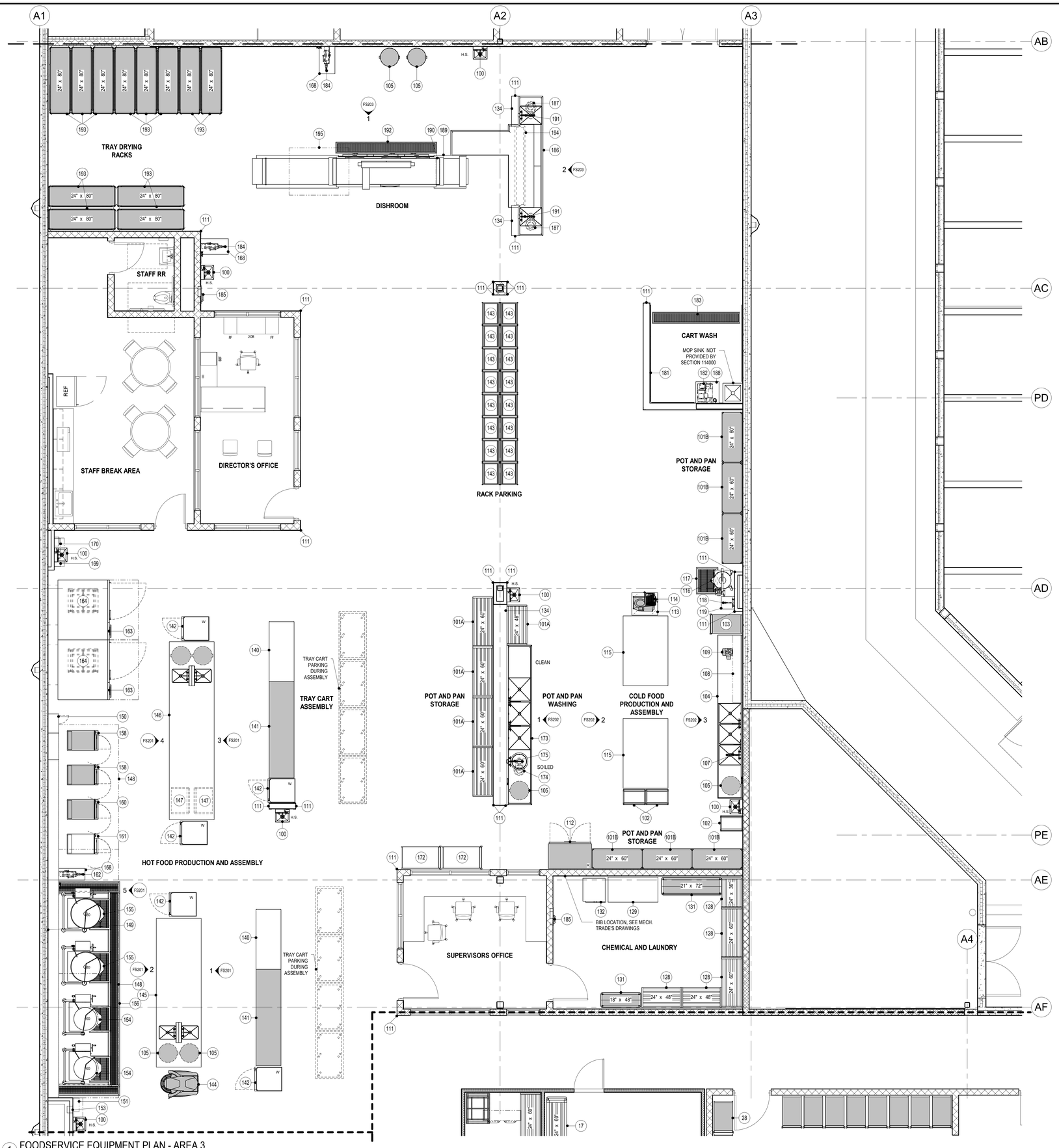

1 FOODSERVICE EQUIPMENT PLAN - AREA 3
1/4" = 1'-0"

Farnsworth GROUP
14225 UNIVERSITY AVENUE, SUITE 110
WALKEE, IOWA 50263
(515) 225-3469 / info@f-w.com
www.f-w.com
Engineers | Architects | Surveyors | Scientists

RIPPE ASSOCIATES
FOODSERVICE DESIGN + CONSULTING

kpff

IMEG

Bishop Engineering

ISSUE:

#	DATE:	DESCRIPTION:

BID SET

PROJECT:
STATE OF IOWA DEPARTMENT OF CORRECTIONS

CLARINDA CORRECTIONAL FACILITY - KITCHEN & LAUNDRY ADDITION

2000 N 16TH ST, CLARINDA, IA 51632

DATE:	02/09/2024
DESIGNED:	EG/TP
DRAWN:	MM/BB
REVIEWED:	EG/RB

SHEET TITLE:

FOODSERVICE EQUIPMENT PLAN AND SCHEDULE - AREA 3

SHEET NUMBER:

FS103

PROJECT NO.: 0240202.00
RFB922300-02

2/2/2024 12:14:18 PM

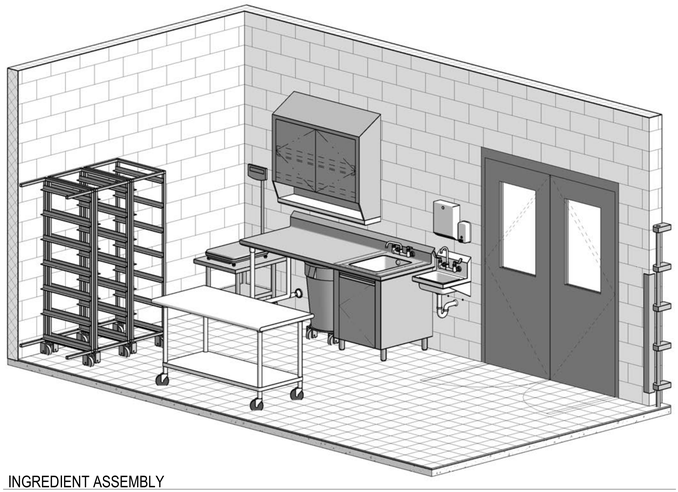

INGREDIENT ASSEMBLY

RRA KEYNOTE LEGEND	
KEYNOTE	KEYNOTE TEXT
SD-1a	TABLE EDGE - TURN DOWN
SD-2a	BACKSPLASH - AT WALL
SD-3	FRAMEWORK
SD-4	TABLE & SINK LEGS
SD-6	REMOVABLE UNDERSHELF
SD-7	CABINET CONSTRUCTION
SD-9a	GENERAL USE 16"x20"x10" DP.
SD-17	HINGED SOLID DOOR - INTEGRAL PULL
SD-28	WALL CABINET W/SHELF
SD-30	UTILITY CURB
SD-39	STAINLESS STEEL CORNER GUARD
SD-70	SHEET PAN DOLLY

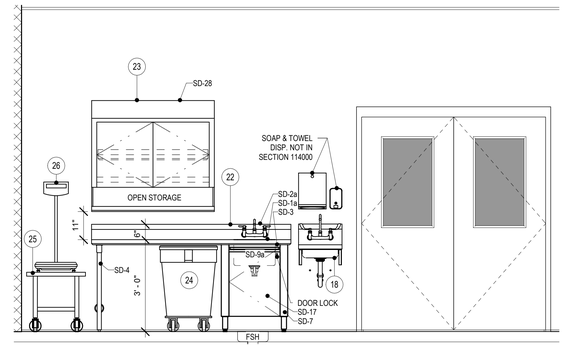

1 ITEM 22 - WORKCOUNTER W/ SINK
1/2" = 1'-0"

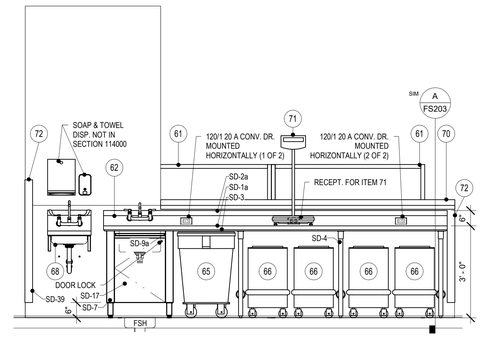

2 ITEM 62 - WORKCOUNTER W/ SINK
1/2" = 1'-0"

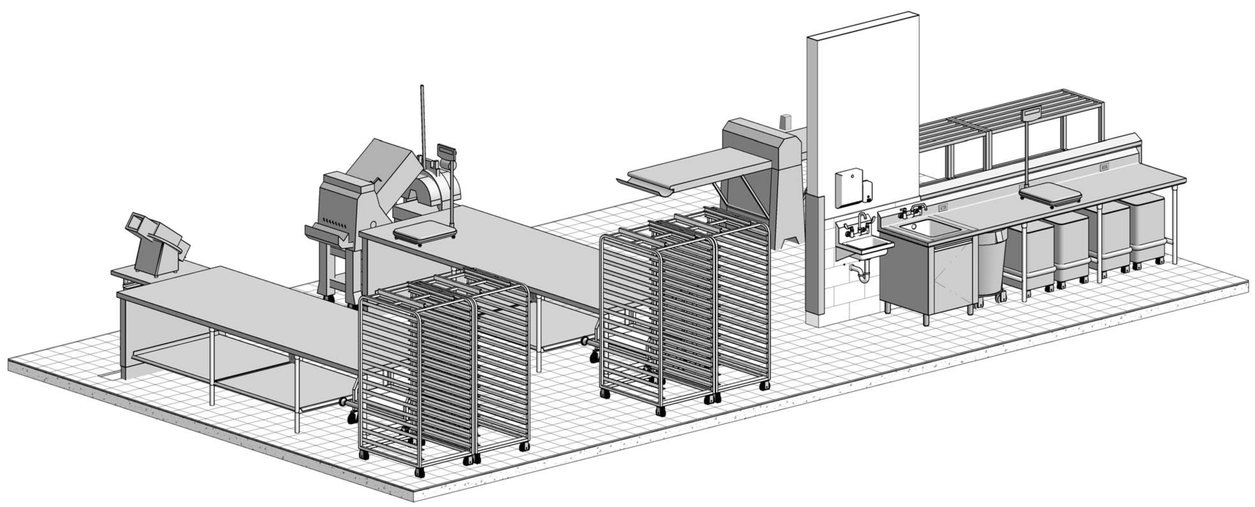

BAKERY PREP

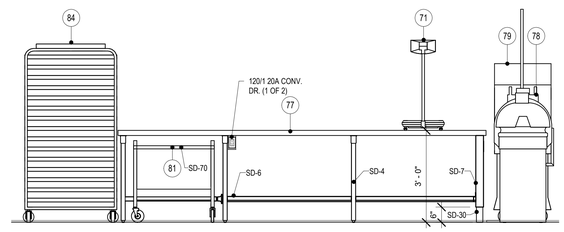

3 ITEM 77 - WORKCOUNTER 1
1/2" = 1'-0"

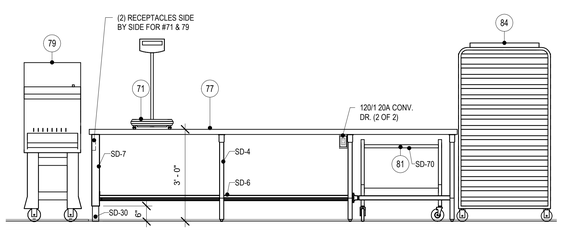

4 ITEM 77 - WORKCOUNTER 2
1/2" = 1'-0"

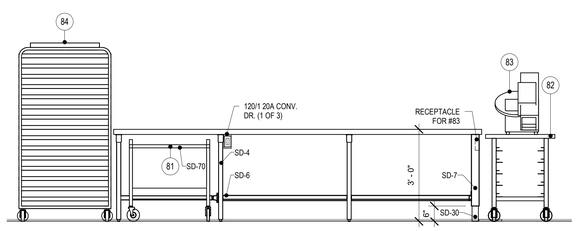

5 ITEM 77 - WORKCOUNTER 3
1/2" = 1'-0"

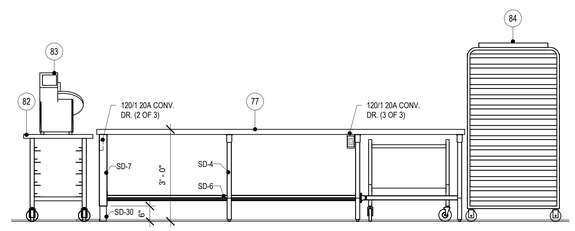

6 ITEM 77 - WORKCOUNTER 4
1/2" = 1'-0"

Farnsworth GROUP
14225 UNIVERSITY AVENUE, SUITE 110
WALKEE, IOWA 50263
(515) 225-3469 / info@f-w.com
www.f-w.com
Engineers | Architects | Surveyors | Scientists

RIPPE ASSOCIATES
FOODSERVICE DESIGN + CONSULTING

kpff

IMEG

Bishop Engineering

ISSUE:

#	DATE:	DESCRIPTION:

BID SET

PROJECT:
STATE OF IOWA DEPARTMENT OF CORRECTIONS

CLARINDA CORRECTIONAL FACILITY - KITCHEN & LAUNDRY ADDITION

2000 N 16TH ST, CLARINDA, IA 51632

DATE:	02/09/2024
DESIGNED:	EG/TP
DRAWN:	MM/BB
REVIEWED:	EG/RB

SHEET TITLE:

FOODSERVICE EQUIPMENT ELEVATIONS AND SECTIONS

SHEET NUMBER:

FS200

PROJECT NO.: 0240202.00
RFB922300-02

2/22/2024 12:14:53 PM

RRA KEYNOTE LEGEND	
KEYNOTE	KEYNOTE TEXT
SD-1a	TABLE EDGE - TURN DOWN
SD-2d	BACKSPLASH - COMMON
SD-3	FRAMEWORK
SD-7	CABINET CONSTRUCTION
SD-9a	GENERAL USE 16"x20"x10" DP.
SD-17	HINGED SOLID DOOR - INTEGRAL PULL
SD-30	UTILITY CURB
SD-38	STAINLESS STEEL WALL PANEL
SD-70	SHEET PAN DOLLY

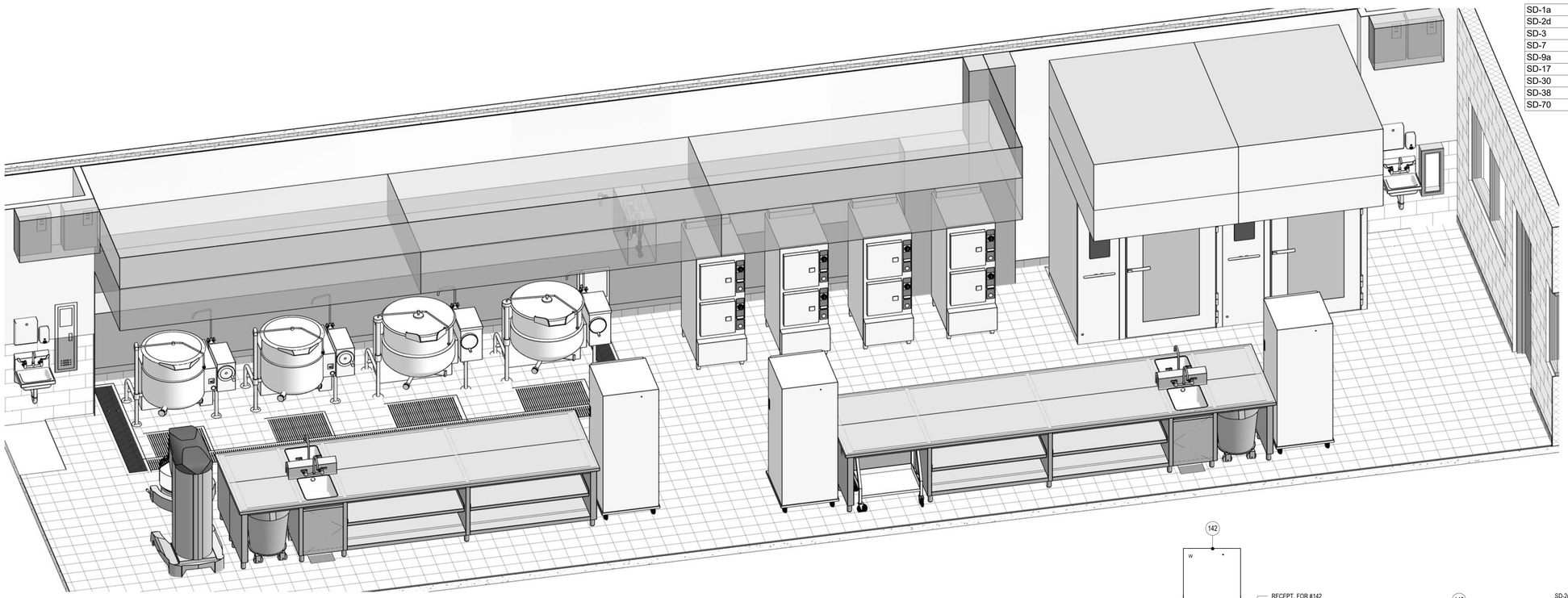

HOT FOOD PREP

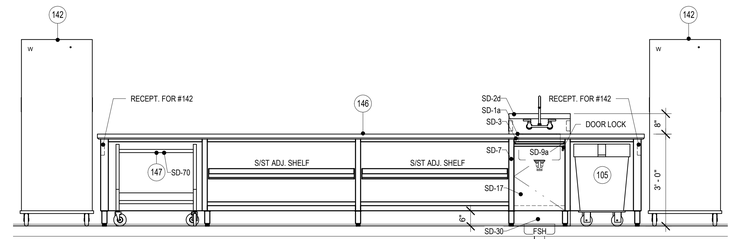

3 ITEM 146 - WORKCOUNTER W/ SINKS 1
1/2" = 1'-0"

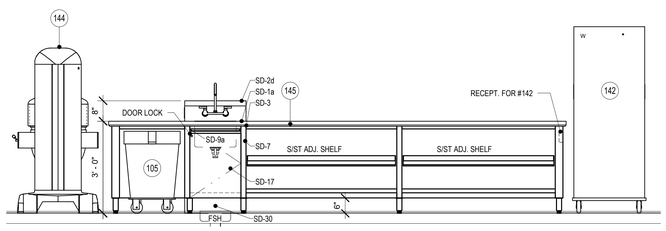

1 ITEM 145 - WORKCOUNTER W/ SINKS 1
1/2" = 1'-0"

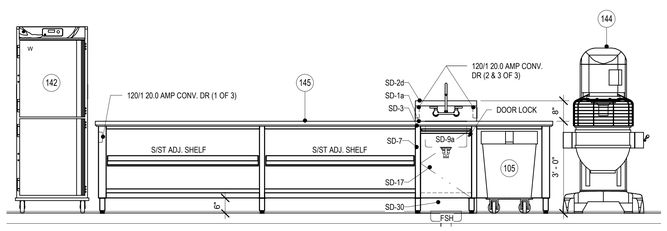

2 ITEM 145 - WORKCOUNTER W/ SINKS 2
1/2" = 1'-0"

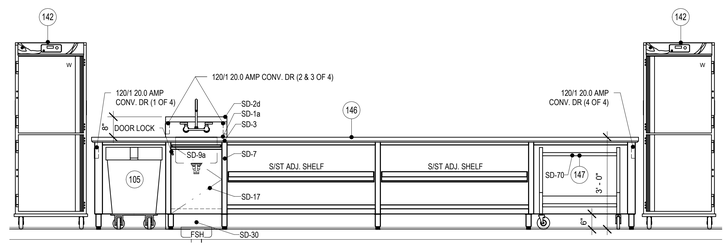

4 ITEM 146 - WORKCOUNTER W/ SINKS 2
1/2" = 1'-0"

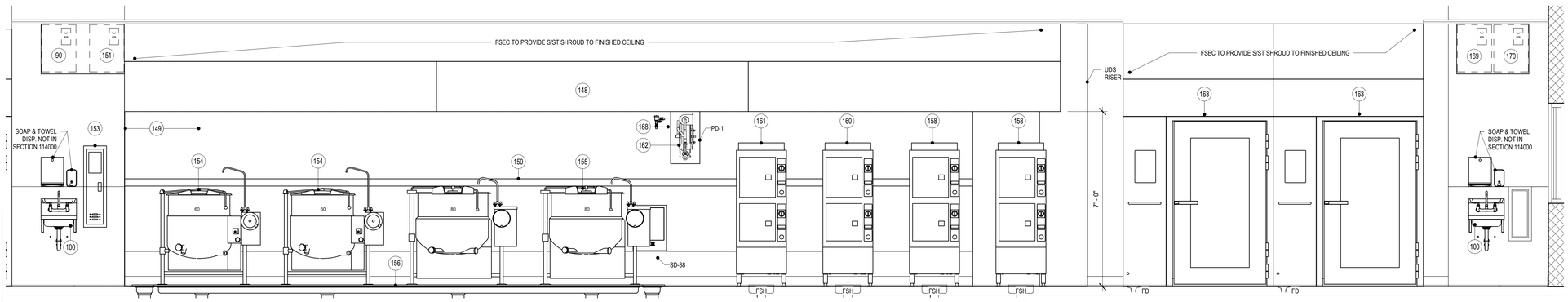

5 ITEM 148 - EXHAUST HOOD (TYPE I)
1/2" = 1'-0"

Farnsworth GROUP
14225 UNIVERSITY AVENUE, SUITE 110
WALKEE, IOWA 50263
(515) 225-3469 / info@f-w.com
www.f-w.com
Engineers | Architects | Surveyors | Scientists

RIPPE ASSOCIATES
FOODSERVICE DESIGN + CONSULTING

kpff

IMEG

Bishop Engineering

ISSUE:

#	DATE:	DESCRIPTION:

BID SET

PROJECT:
STATE OF IOWA DEPARTMENT OF CORRECTIONS

CLARINDA CORRECTIONAL FACILITY - KITCHEN & LAUNDRY ADDITION

2000 N 16TH ST, CLARINDA, IA 51632

DATE:	02/09/2024
DESIGNED:	EG/TP
DRAWN:	MM/BB
REVIEWED:	EG/RB

SHEET TITLE:

FOODSERVICE EQUIPMENT ELEVATIONS AND SECTIONS

SHEET NUMBER:

FS201

PROJECT NO.: 0240202.00
RFB922300-02

2/2/2024 12:14:52 PM

RRA KEYNOTE LEGEND	
KEYNOTE	KEYNOTE TEXT
SD-1a	TABLE EDGE - TURN DOWN
SD-1b	TABLE EDGE - RAISED ROLLED
SD-1c	TABLE EDGE - INVERTED "V"
SD-2a	BACKSPLASH - AT WALL
SD-3	FRAMEWORK
SD-4	TABLE & SINK LEGS
SD-6	REMOVABLE UNDERSHELF
SD-10f	PREP 24"x26 1/2"x12" DP.
SD-10j	POT & PAN 28"x26 1/2"x12" DP.
SD-25b	WALL SHELVES
SD-39	STAINLESS STEEL CORNER GUARD

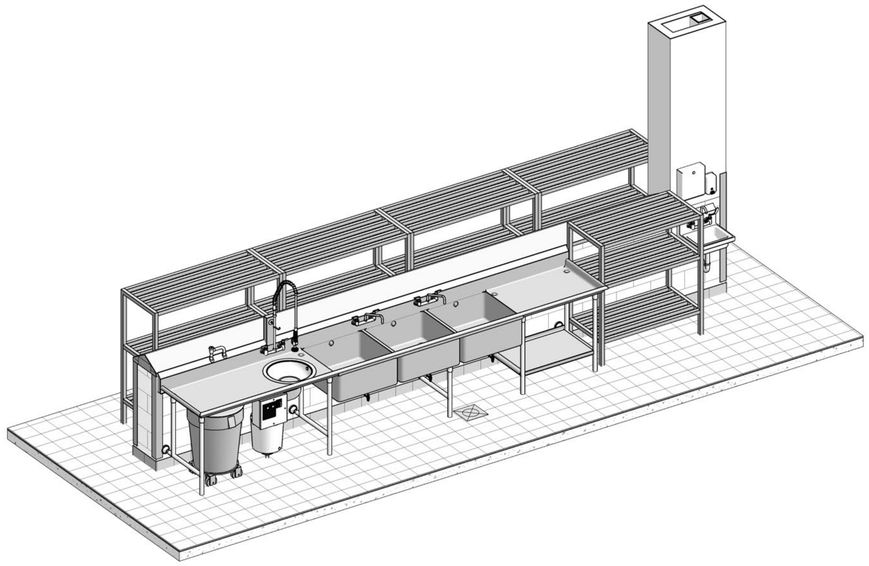

POT AND PAN WASH

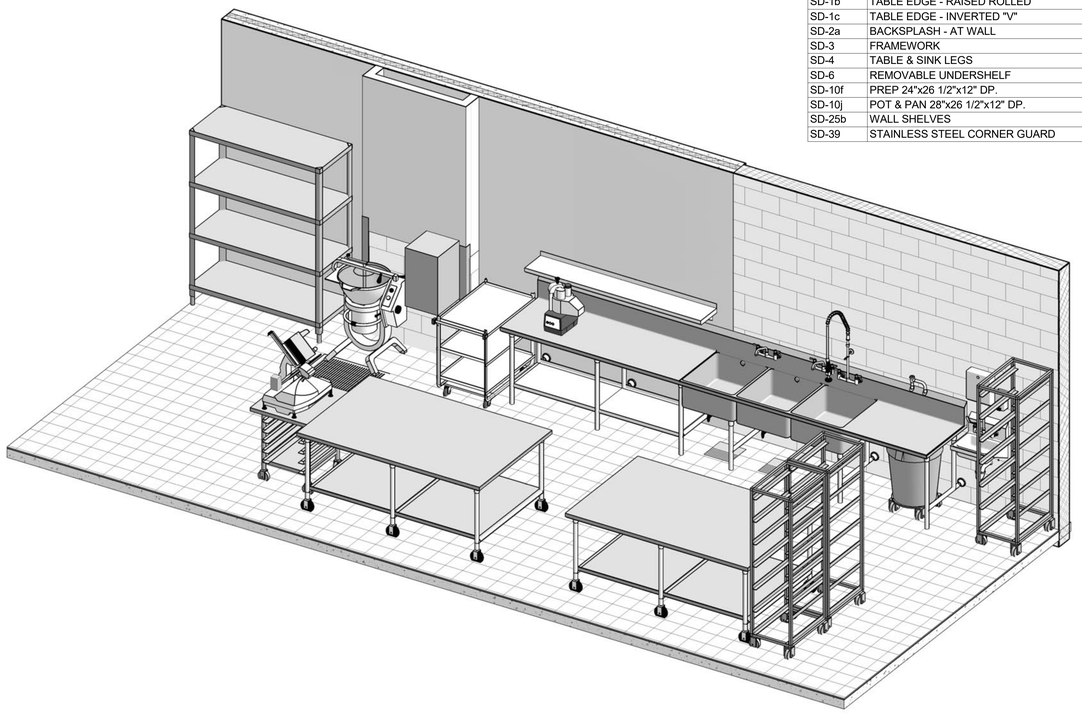

COLD FOOD PREP

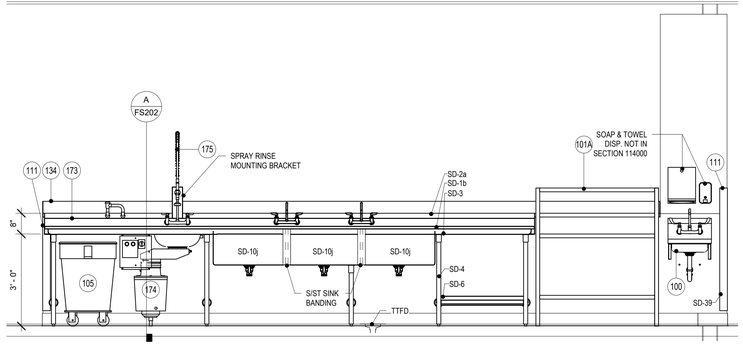

1 ITEM 173 - POT & PAN SINK
1/2" = 1'-0"

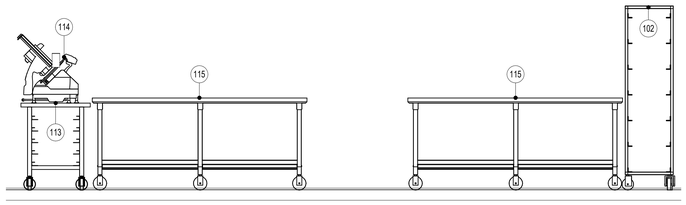

2 ITEM 115 - WORKCOUNTERS
1/2" = 1'-0"

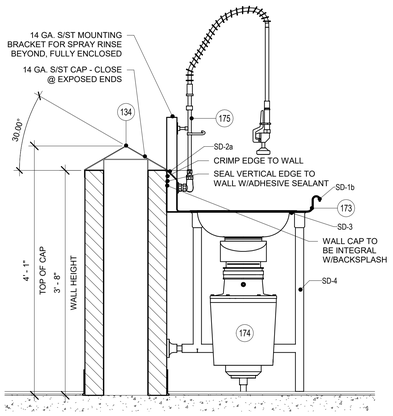

A SECTION THRU WALL CAP 1
1" = 1'-0"

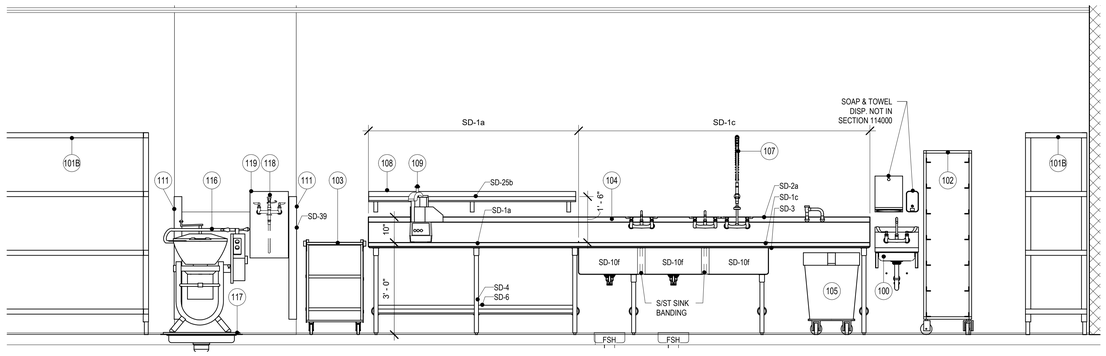

3 ITEM 104 - WORKCOUNTER W/ SINKS
1/2" = 1'-0"

Farnsworth GROUP
14225 UNIVERSITY AVENUE, SUITE 110
WALKEE, IOWA 50263
(515) 225-3469 / info@f-w.com
www.f-w.com
Engineers | Architects | Surveyors | Scientists
RIPPE ASSOCIATES
FOODSERVICE DESIGN + CONSULTING
kpff
IMEG
Bishop Engineering

ISSUE:

#	DATE:	DESCRIPTION:

BID SET

PROJECT:
STATE OF IOWA DEPARTMENT OF CORRECTIONS

CLARINDA CORRECTIONAL FACILITY - KITCHEN & LAUNDRY ADDITION

2000 N 16TH ST, CLARINDA, IA 51632

DATE:	02/09/2024
DESIGNED:	EG/TP
DRAWN:	MM/BB
REVIEWED:	EG/RB

SHEET TITLE:

FOODSERVICE EQUIPMENT ELEVATIONS AND SECTIONS

SHEET NUMBER:

FS202

PROJECT NO.: 0240202.00
RFB922300-02

2/2/2024 12:15:07 PM

RRA KEYNOTE LEGEND	
KEYNOTE	KEYNOTE TEXT
SD-1b	TABLE EDGE - RAISED ROLLED
SD-2a	BACKSPLASH - AT WALL
SD-3	FRAMEWORK
SD-4	TABLE & SINK LEGS
SD-39	STAINLESS STEEL CORNER GUARD

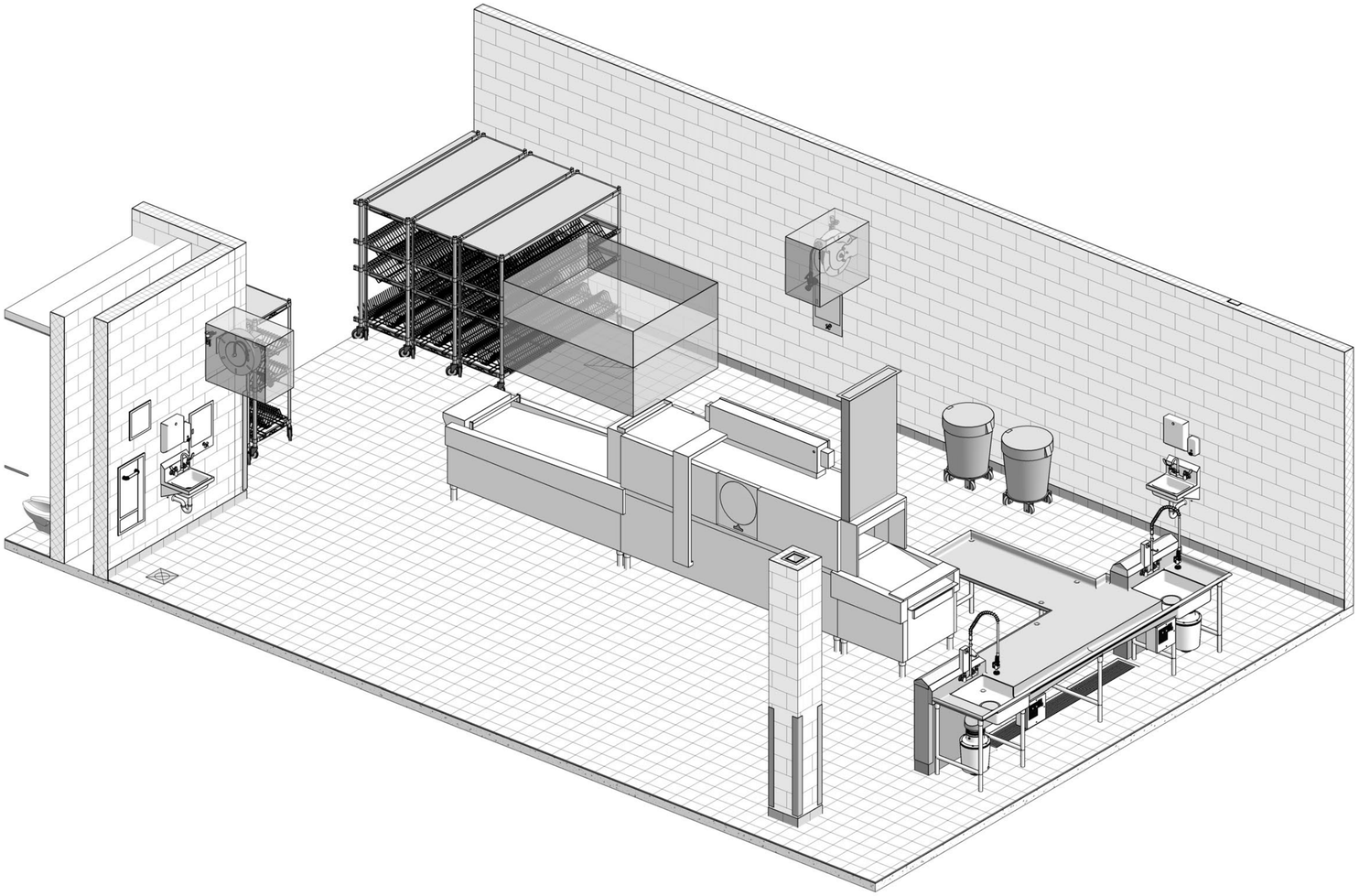

DISHROOM

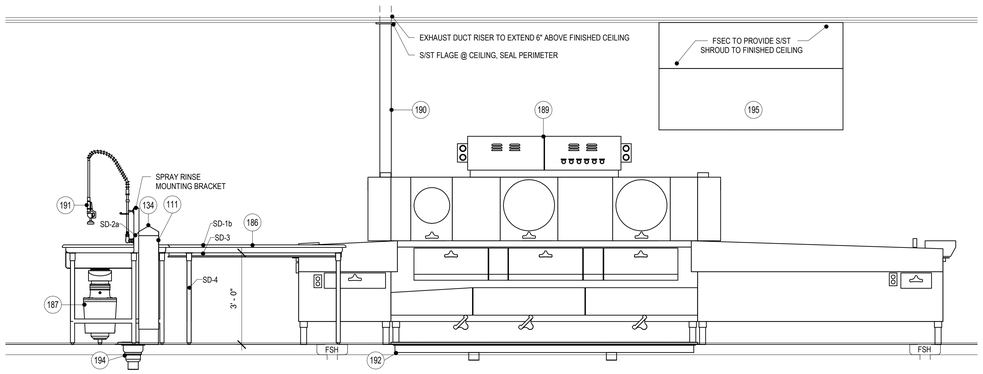

1 ITEM 186 - WORKCOUNTER W/ SINK & VENT DUCT RISERS
1/2" = 1'-0"

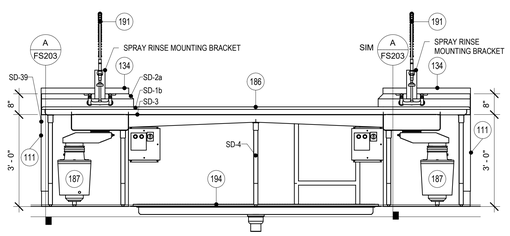

2 ITEM 186 - WORKCOUNTER W/ SINK
1/2" = 1'-0"

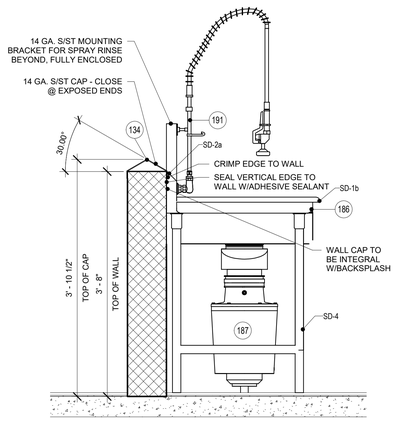

A SECTION THRU WALL CAP 2
1" = 1'-0"

Farnsworth GROUP
14225 UNIVERSITY AVENUE, SUITE 110
WALKEE, IOWA 50263
(515) 225-3469 / info@f-w.com
www.f-w.com
Engineers | Architects | Surveyors | Scientists

RIPPE ASSOCIATES
FOODSERVICE DESIGN + CONSULTING

kpff

IMEG

Bishop Engineering

ISSUE:

#	DATE:	DESCRIPTION:

BID SET

PROJECT:

STATE OF IOWA DEPARTMENT OF CORRECTIONS

CLARINDA CORRECTIONAL FACILITY - KITCHEN & LAUNDRY ADDITION

2000 N 16TH ST, CLARINDA, IA 51632

DATE:	02/09/2024
DESIGNED:	EG/TP
DRAWN:	MM/BB
REVIEWED:	EG/RB

SHEET TITLE:

FOODSERVICE EQUIPMENT ELEVATIONS AND SECTIONS

SHEET NUMBER:

FS203

PROJECT NO.: 0240202.00
RFB922300-02

2/2/2024 12:13:26 PM

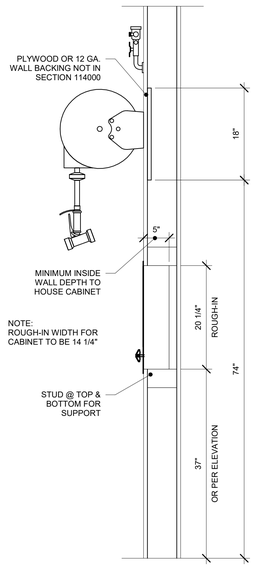

3 RECESSED HOSE REEL CABINET
1" = 1'-0"

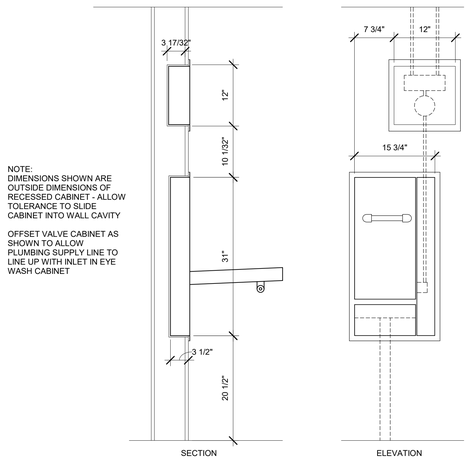

NOTE:
DIMENSIONS SHOWN ARE OUTSIDE DIMENSIONS OF RECESSED CABINET - ALLOW TOLERANCE TO SLIDE CABINET INTO WALL CAVITY

OFFSET VALVE CABINET AS SHOWN TO ALLOW PLUMBING SUPPLY LINE TO LINE UP WITH INLET IN EYE WASH CABINET

4 RECESSED EYE/FACE WASH - GUARDIAN
1" = 1'-0"

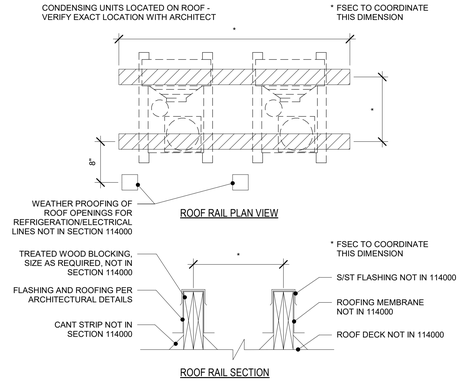

NOTES:
1. ROOF RAILS TO SUPPORT CONDENSING UNIT NOT IN SECTION 114000
2. SLEEVES, WEATHERPROOF SHROUDS AND SEALING OF ALL OPENINGS IN ROOF, CEILINGS AND WALLS TO BE IN ACCORDANCE WITH LOCAL FIRE AND BUILDING CODES NOT IN SECTION 114000
3. TRADE CONTRACTORS TO COORDINATE ALL DIMENSIONS WITH FSEC SINCE SIZE, LOCATION AND QUANTITIES OF CURBS WILL VARY

5 ROOF RAIL
1" = 1'-0"

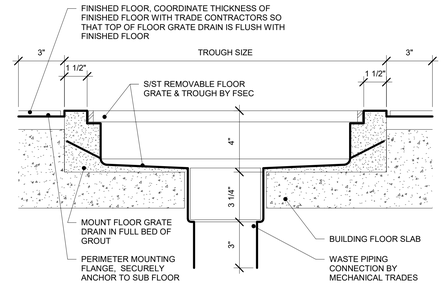

NOTE:
FLOOR TROUGHS BY MECHANICAL TRADES LOCATED IN THE FOODSERVICE AREAS SHOULD BE CONSTRUCTED IDENTICALLY.

6 FLOOR TROUGH
3" = 1'-0"

SPECIAL CONDITIONS LEGEND

	WALL BACKING
	CHANNEL BASE
	DEPRESSED FLOOR (SEE DETAIL)
	DEPRESSED FLOOR WITH IN FLOOR HEAT (SEE DETAIL)
C.G.	4'-0" HIGH CORNER GUARD (NOT BY FSEC)
K.P.	KICKPLATE (NOT BY FSEC)
FSEC	FOODSERVICE EQUIPMENT CONTRACTOR

NOTE:
1. DIMENSIONS SHOWN ARE APPROXIMATE. FSEC TO COORDINATE AND VERIFY ALL DIMENSIONS IN THE FIELD WITH APPROPRIATE TRADES PRIOR TO CONSTRUCTION.
2. THE WALK-IN REFRIGERATOR/FREEZER CONDENSING UNITS ARE LOCATED APPROXIMATELY WHERE SHOWN ON PLAN. VERIFY THE EXACT LOCATION WITHE ARCHITECT/ ENGINEER. ROOF CURBS/CONCRETE PADS FOR CONDENSING UNITS & SLEEVED, SEALED PENETRATIONS IN ROOFS, FLOORS/ CEILINGS & WALLS FOR CONDENSING UNIT REFRIGERATION & UTILITY LINES ARE NOT BY THE FSEC.
3. THE FSEC WILL FURNISH AND INSTALL THE REFRIGERATION LINES BETWEEN THE CONDENSING UNITS AND SPECIFIED REFRIGERATED EQUIPMENT. IT IS THE FSEC's RESPONSIBILITY TO COORDINATE THE EXACT ROUTE TO EACH ITEM WITH THE APPROPRIATE TRADES.

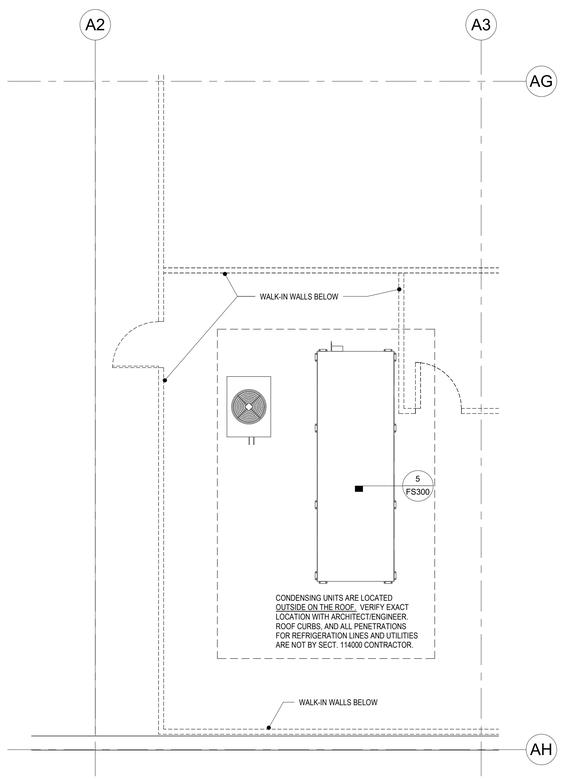

2 FOODSERVICE SPECIAL CONDITIONS PLAN - ROOF
1/4" = 1'-0"

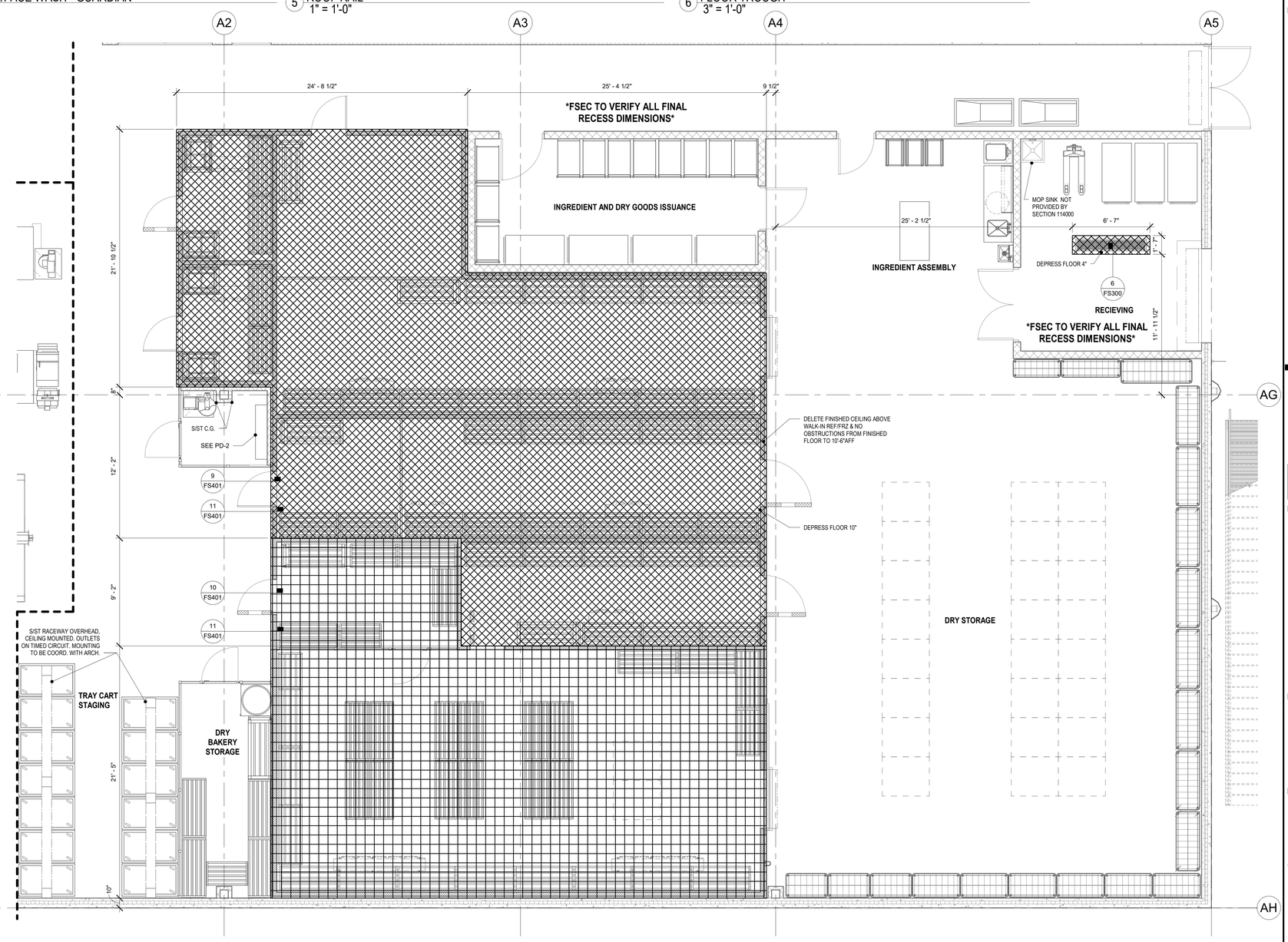

1 FOODSERVICE SPECIAL CONDITIONS PLAN - AREA 1
1/4" = 1'-0"

Farnsworth GROUP
14225 UNIVERSITY AVENUE, SUITE 110
WALKEE, IOWA 50263
(515) 225-3469 / info@f-w.com
www.f-w.com
Engineers | Architects | Surveyors | Scientists
RIPPE ASSOCIATES
FOODSERVICE DESIGN + CONSULTING
kpff
IMEG
Bishop Engineering

ISSUE:

#	DATE:	DESCRIPTION:

BID SET

PROJECT:
STATE OF IOWA DEPARTMENT OF CORRECTIONS

CLARINDA CORRECTIONAL FACILITY - KITCHEN & LAUNDRY ADDITION

2000 N 16TH ST, CLARINDA, IA 51632

DATE:	02/09/2024
DESIGNED:	EG/TP
DRAWN:	MM/BB
REVIEWED:	EG/RB

SHEET TITLE:
FOODSERVICE EQUIPMENT SPECIAL CONDITIONS DETAILS AND PLAN - AREA 1

SHEET NUMBER:
FS300

PROJECT NO.: 0240202.00
RFB922300-02

2/2/2024 12:15:55 PM

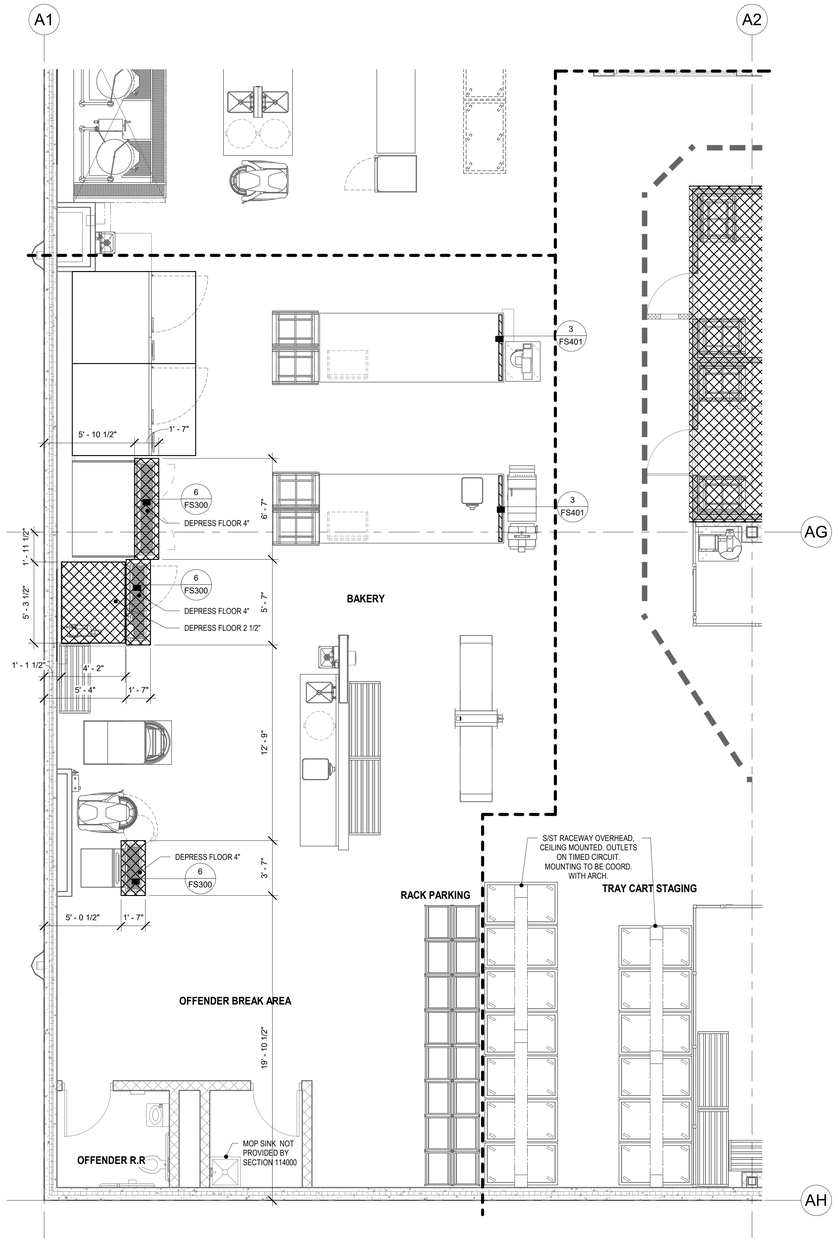

1 FOODSERVICE SPECIAL CONDITIONS PLAN - AREA 2
1/4" = 1'-0"

SPECIAL CONDITIONS LEGEND

----------	WALL BACKING
	CHANNEL BASE
	DEPRESSED FLOOR (SEE DETAIL)
	DEPRESSED FLOOR WITH IN FLOOR HEAT (SEE DETAIL)
C.G.	4'-0" HIGH CORNER GUARD (NOT BY FSEC)
K.P.	KICKPLATE (NOT BY FSEC)
FSEC	FOODSERVICE EQUIPMENT CONTRACTOR

NOTE:

1. DIMENSIONS SHOWN ARE APPROXIMATE. FSEC TO COORDINATE AND VERIFY ALL DIMENSIONS IN THE FIELD WITH APPROPRIATE TRADES PRIOR TO CONSTRUCTION.
2. THE WALK-IN REFRIGERATOR/FREEZER CONDENSING UNITS ARE LOCATED APPROXIMATELY WHERE SHOWN ON PLAN. VERIFY THE EXACT LOCATION W/THE ARCHITECT/ ENGINEER. ROOF CURBS/CONCRETE PADS FOR CONDENSING UNITS & SLEEVED, SEALED PENETRATIONS IN ROOFS, FLOORS/ CEILINGS & WALLS FOR CONDENSING UNIT REFRIGERATION & UTILITY LINES ARE NOT BY THE FSEC.
3. THE FSEC WILL FURNISH AND INSTALL THE REFRIGERATION LINES BETWEEN THE CONDENSING UNITS AND SPECIFIED REFRIGERATED EQUIPMENT. IT IS THE FSEC's RESPONSIBILITY TO COORDINATE THE EXACT ROUTE TO EACH ITEM WITH THE APPROPRIATE TRADES.

Farnsworth GROUP
14225 UNIVERSITY AVENUE, SUITE 110
WALKEE, IOWA 50263
(515) 225-3469 / info@f-w.com
www.f-w.com
Engineers | Architects | Surveyors | Scientists

RIPPE ASSOCIATES
FOODSERVICE DESIGN + CONSULTING

kpff

IMEG

Bishop Engineering

ISSUE:

#	DATE:	DESCRIPTION:

BID SET

PROJECT:
STATE OF IOWA DEPARTMENT OF CORRECTIONS

CLARINDA CORRECTIONAL FACILITY - KITCHEN & LAUNDRY ADDITION

2000 N 16TH ST, CLARINDA, IA 51632

DATE:	02/09/2024
DESIGNED:	EG/TP
DRAWN:	MM/BB
REVIEWED:	EG/RB

SHEET TITLE:

FOODSERVICE EQUIPMENT SPECIAL CONDITIONS PLAN - AREA 2

SHEET NUMBER:

FS301

PROJECT NO.: 0240202.00
RFB922300-02

2/2/2024 12:15:43 PM

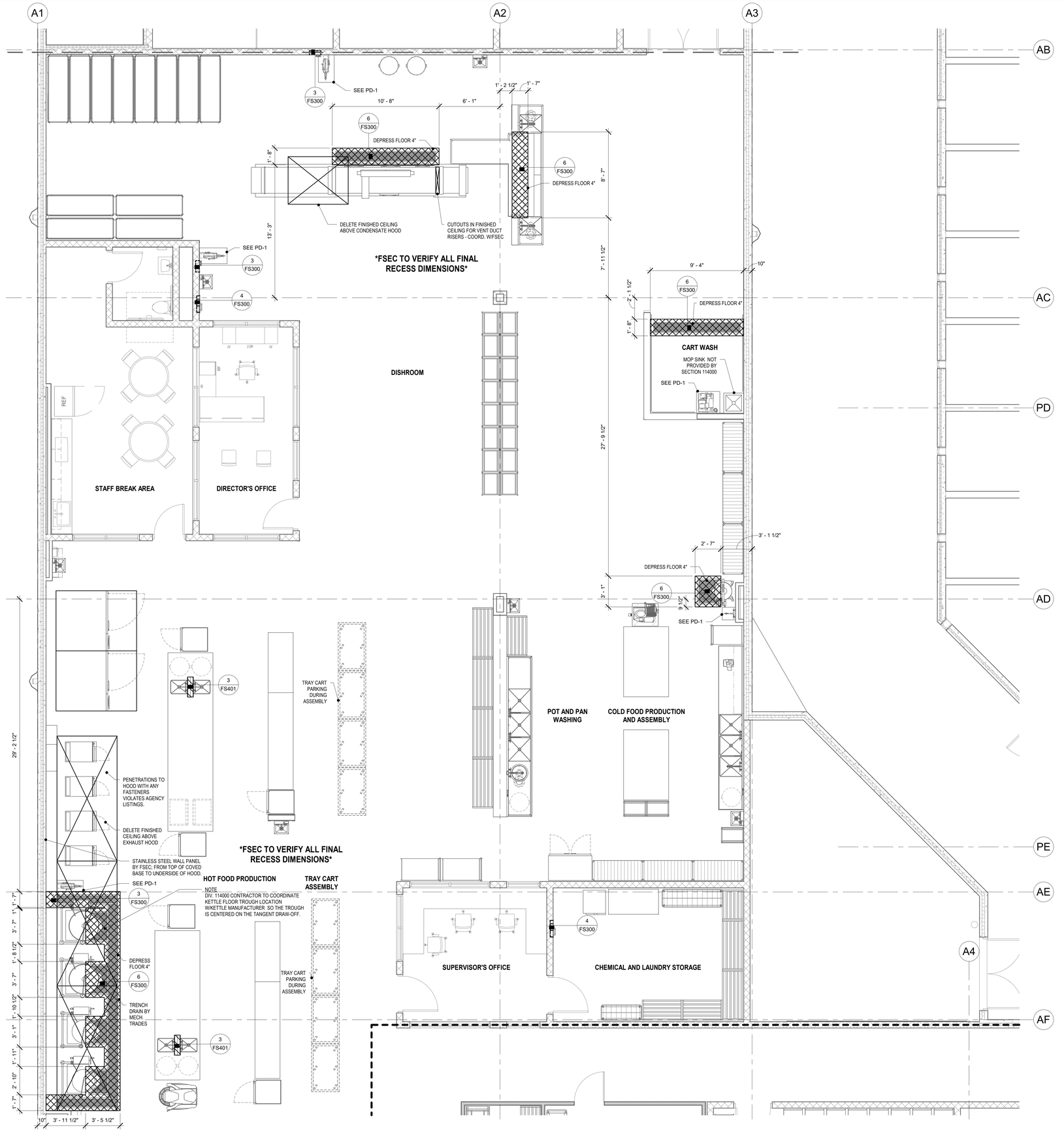

1 FOODSERVICE SPECIAL CONDITIONS PLAN - AREA 3
1/4" = 1'-0"

SPECIAL CONDITIONS LEGEND

----------	WALL BACKING
	CHANNEL BASE
	DEPRESSED FLOOR (SEE DETAIL)
	DEPRESSED FLOOR WITH IN FLOOR HEAT (SEE DETAIL)
C.G.	4'-0" HIGH CORNER GUARD (NOT BY FSEC)
K.P.	KICKPLATE (NOT BY FSEC)
FSEC	FOODSERVICE EQUIPMENT CONTRACTOR

NOTE:

1. DIMENSIONS SHOWN ARE APPROXIMATE. FSEC TO COORDINATE AND VERIFY ALL DIMENSIONS IN THE FIELD WITH APPROPRIATE TRADES PRIOR TO CONSTRUCTION.
2. THE WALK-IN REFRIGERATOR/FREEZER CONDENSING UNITS ARE LOCATED APPROXIMATELY WHERE SHOWN ON PLAN. VERIFY THE EXACT LOCATION W/THE ARCHITECT/ ENGINEER. ROOF CURBS/CONCRETE PADS FOR CONDENSING UNITS & SLEEVED, SEALED PENETRATIONS IN ROOFS, FLOORS/ CEILINGS & WALLS FOR CONDENSING UNIT REFRIGERATION & UTILITY LINES ARE NOT BY THE FSEC.
3. THE FSEC WILL FURNISH AND INSTALL THE REFRIGERATION LINES BETWEEN THE CONDENSING UNITS AND SPECIFIED REFRIGERATED EQUIPMENT. IT IS THE FSEC's RESPONSIBILITY TO COORDINATE THE EXACT ROUTE TO EACH ITEM WITH THE APPROPRIATE TRADES.

2/2/2024 12:15:03 PM

Farnsworth GROUP
14225 UNIVERSITY AVENUE, SUITE 110
WALKEE, IOWA 50263
(515) 225-3469 / info@f-w.com
www.f-w.com
Engineers | Architects | Surveyors | Scientists

RIPPE ASSOCIATES
FOODSERVICE DESIGN + CONSULTING

kpff

IMEG

Bishop Engineering

ISSUE:

#	DATE:	DESCRIPTION:

BID SET

PROJECT:
STATE OF IOWA DEPARTMENT OF CORRECTIONS

CLARINDA CORRECTIONAL FACILITY - KITCHEN & LAUNDRY ADDITION

2000 N 16TH ST, CLARINDA, IA 51632

DATE:	02/09/2024
DESIGNED:	EG/TP
DRAWN:	MM/BB
REVIEWED:	EG/RB

SHEET TITLE:

FOODSERVICE EQUIPMENT SPECIAL CONDITIONS PLAN - AREA 3

SHEET NUMBER:

FS302

PROJECT NO.: 0240202.00
RFB922300-02

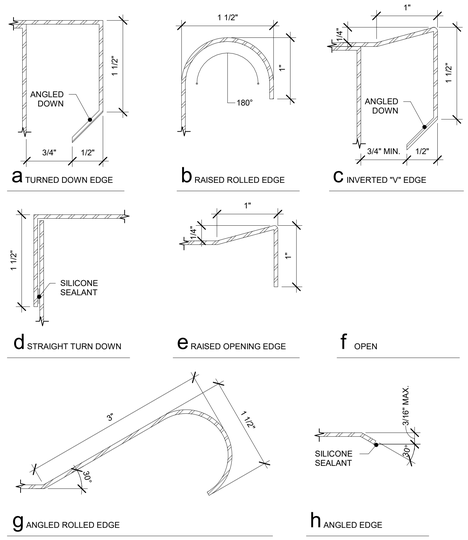

SD-1 TABLE EDGES

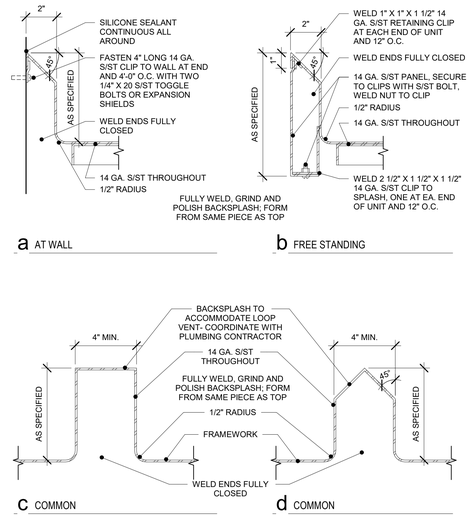

SD-2 BACKSPLASHES

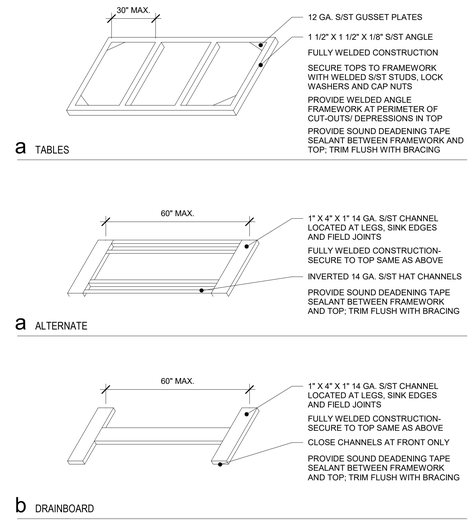

SD-3 FRAMEWORK

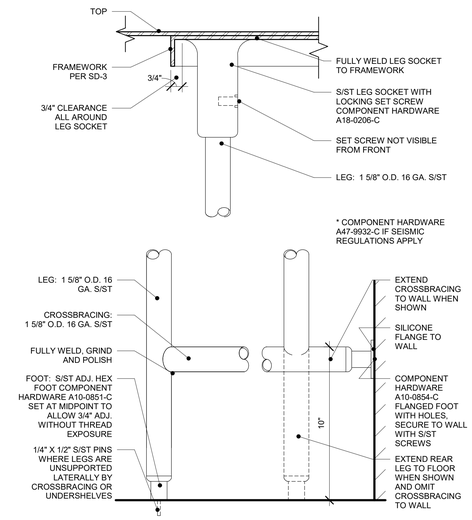

SD-4 TABLE & SINK LEGS

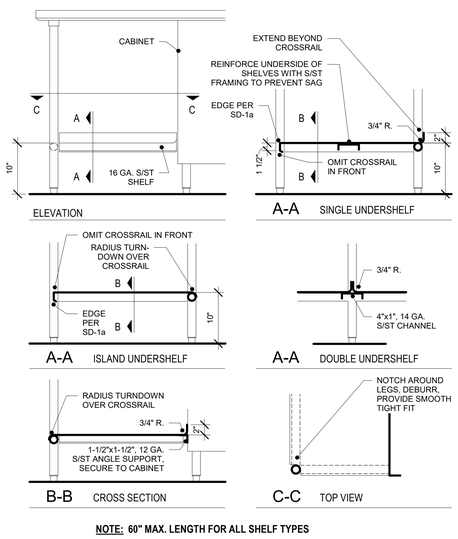

NOTE: 60" MAX. LENGTH FOR ALL SHELF TYPES

SD-6 REMOVABLE UNDERSHELF

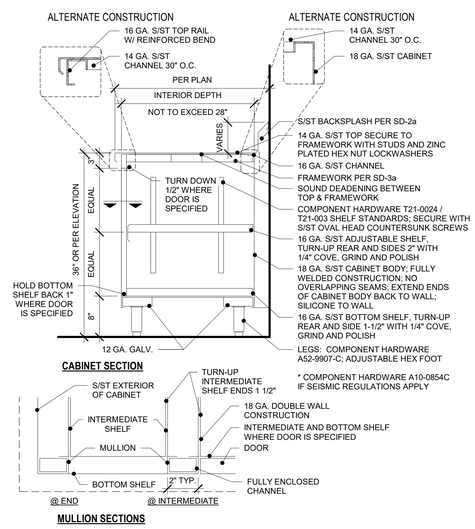

SD-7 CABINET CONSTRUCTION

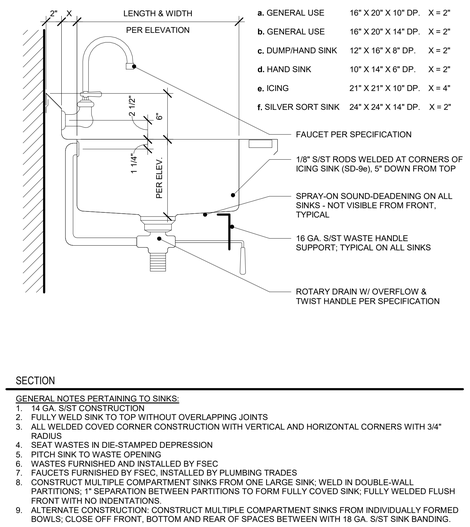

a. GENERAL USE	16" X 20" X 10" DP.	X = 2"
b. GENERAL USE	16" X 20" X 14" DP.	X = 2"
c. DUMP/HAND SINK	12" X 16" X 8" DP.	X = 2"
d. HAND SINK	10" X 14" X 6" DP.	X = 2"
e. ICING	21" X 21" X 10" DP.	X = 4"
f. SILVER SORT SINK	24" X 24" X 14" DP.	X = 2"

SECTION

GENERAL NOTES PERTAINING TO SINKS:
1. 14 GA. S/ST CONSTRUCTION
2. FULLY WELD SINK TO TOP WITHOUT OVERLAPPING JOINTS
3. ALL WELDED COVED CORNER CONSTRUCTION WITH VERTICAL AND HORIZONTAL CORNERS WITH 3/4" RADIUS
4. SEAT WASTES IN DIE-STAMPED DEPRESSION
5. PITCH SINK TO WASTE OPENING
6. WASTES FURNISHED AND INSTALLED BY FSEC
7. FAUCETS FURNISHED BY FSEC, INSTALLED BY PLUMBING TRADES
8. CONSTRUCT MULTIPLE COMPARTMENT SINKS FROM ONE LARGE SINK; WELD IN DOUBLE-WALL PARTITIONS; 1" SEPARATION BETWEEN PARTITIONS TO FORM FULLY COVED SINK; FULLY WELDED FLUSH FRONT WITH NO INDENTATIONS.
9. ALTERNATE CONSTRUCTION: CONSTRUCT MULTIPLE COMPARTMENT SINKS FROM INDIVIDUALLY FORMED BOWLS; CLOSE OFF FRONT, BOTTOM AND REAR OF SPACES BETWEEN WITH 18 GA. S/ST SINK BANDING.

SD-9 SINKS

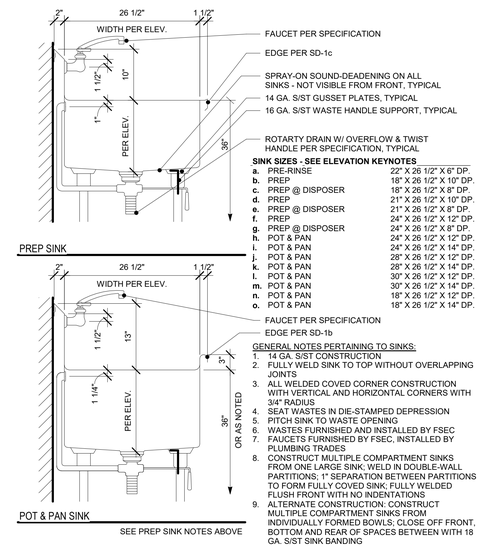

SINK SIZES - SEE ELEVATION KEYNOTES		
a.	PRE-RINSE	22" X 26 1/2" X 6" DP.
b.	PREP	18" X 26 1/2" X 10" DP.
c.	PREP @ DISPOSER	18" X 26 1/2" X 8" DP.
d.	PREP	21" X 26 1/2" X 10" DP.
e.	PREP @ DISPOSER	21" X 26 1/2" X 8" DP.
f.	PREP	24" X 26 1/2" X 12" DP.
g.	PREP @ DISPOSER	24" X 26 1/2" X 8" DP.
h.	POT & PAN	24" X 26 1/2" X 12" DP.
i.	POT & PAN	24" X 26 1/2" X 14" DP.
j.	POT & PAN	28" X 26 1/2" X 12" DP.
k.	POT & PAN	28" X 26 1/2" X 14" DP.
l.	POT & PAN	30" X 26 1/2" X 12" DP.
m.	POT & PAN	30" X 26 1/2" X 14" DP.
n.	POT & PAN	18" X 26 1/2" X 12" DP.
o.	POT & PAN	18" X 26 1/2" X 14" DP.

GENERAL NOTES PERTAINING TO SINKS:
1. 14 GA. S/ST CONSTRUCTION
2. FULLY WELD SINK TO TOP WITHOUT OVERLAPPING JOINTS
3. ALL WELDED COVED CORNER CONSTRUCTION WITH VERTICAL AND HORIZONTAL CORNERS WITH 3/4" RADIUS
4. SEAT WASTES IN DIE-STAMPED DEPRESSION
5. PITCH SINK TO WASTE OPENING
6. WASTES FURNISHED AND INSTALLED BY FSEC
7. FAUCETS FURNISHED BY FSEC, INSTALLED BY PLUMBING TRADES
8. CONSTRUCT MULTIPLE COMPARTMENT SINKS FROM ONE LARGE SINK; WELD IN DOUBLE-WALL PARTITIONS; 1" SEPARATION BETWEEN PARTITIONS TO FORM FULLY COVED SINK; FULLY WELDED FLUSH FRONT WITH NO INDENTATIONS
9. ALTERNATE CONSTRUCTION: CONSTRUCT MULTIPLE COMPARTMENT SINKS FROM INDIVIDUALLY FORMED BOWLS; CLOSE OFF FRONT, BOTTOM AND REAR OF SPACES BETWEEN WITH 18 GA. S/ST SINK BANDING

SEE PREP SINK NOTES ABOVE

SD-10 PREP/POT & PAN SINKS

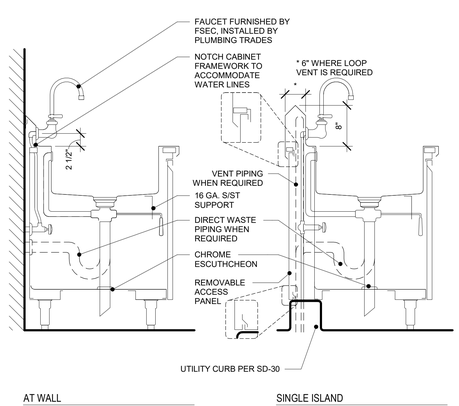

NOTES:
1. WATER AND WASTE PIPING, INCLUDING TAILPIECE, BY PLUMBING TRADES.
2. ROTARY DRAIN AND OVERFLOW FURNISHED AND INSTALLED BY FSEC.
3. OPENINGS CUT IN CABINET FOR WATER AND WASTE LINES BY FSEC.
4. FSEC TO PROVIDE CHROME-PLATED ESCUTCHEONS AT CABINET UTILITY OPENINGS.
5. VISIBLE HOLES ARE NOT ACCEPTABLE.
6. SHORTEN TWIST HANDLE ON WASTE AS REQUIRED TO CLOSE DOOR.

SD-12 SINK ENCLOSURE - WALL & SINGLE ISLAND

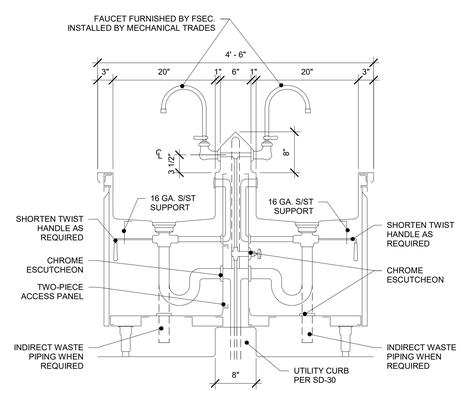

NOTES:
1. WATER AND WASTE PIPING, INCLUDING TAILPIECE, BY MECHANICAL TRADES.
2. 2. TWIST HANDLE WASTE WITH OVERFLOW FURNISHED AND INSTALLED BY FSEC.
3. 3. OPENINGS IN CABINET FOR WATER AND WASTE LINES BY FSEC.
4. 4. OPENINGS MUST BE COVERED WITH CHROME-PLATED ESCUTCHEONS BY FSEC.
5. 5. VISIBLE HOLES ARE NOT ACCEPTABLE.

SD-13 SINK ENCLOSURE - DOUBLE ISLAND

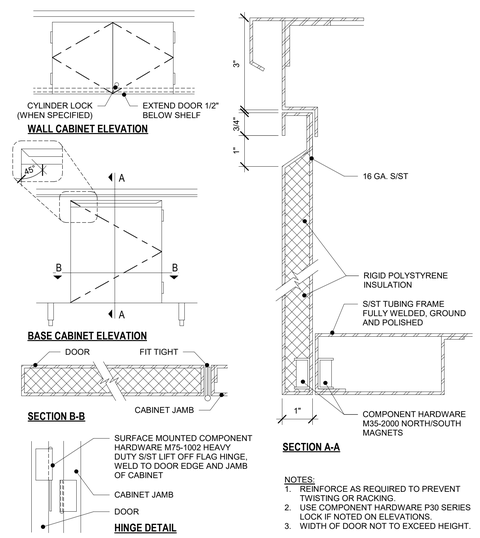

NOTES:
1. REINFORCE AS REQUIRED TO PREVENT TWISTING OR RACKING.
2. USE COMPONENT HARDWARE P30 SERIES LOCK IF NOTED ON ELEVATIONS.
3. WIDTH OF DOOR NOT TO EXCEED HEIGHT.

SD-17 HINGED SOLID DOOR - INTEGRAL PULL

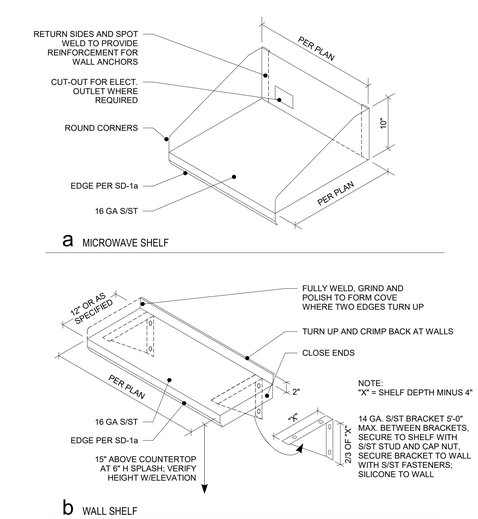

SD-25 WALL SHELVES

Farnsworth GROUP
14225 UNIVERSITY AVENUE, SUITE 110
WALKEE, IOWA 50263
(515) 225-3469 / info@f-w.com
www.f-w.com
Engineers | Architects | Surveyors | Scientists
RIPPE ASSOCIATES
FOODSERVICE DESIGN + CONSULTING
kpff
IMEG
Bishop Engineering

ISSUE:

#	DATE:	DESCRIPTION:

BID SET

PROJECT:

STATE OF IOWA DEPARTMENT OF CORRECTIONS

CLARINDA CORRECTIONAL FACILITY - KITCHEN & LAUNDRY ADDITION

2000 N 16TH ST, CLARINDA, IA 51632

DATE:	02/09/2024
DESIGNED:	EG/TP
DRAWN:	MM
REVIEWED:	EG/RB

SHEET TITLE:

FOODSERVICE EQUIPMENT STANDARD DETAILS

SHEET NUMBER:

FS400

PROJECT NO.: 0240202.00
RFB922300-02

2/2/2024 12:16:08 PM

NOTE:
18 GA. S/ST BACK, TOP AND ENDS, FULLY WELDED CONSTRUCTION, NO OVERLAPPING SEAMS

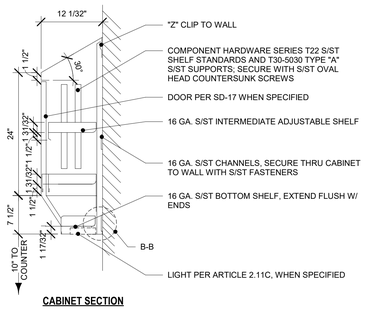

CABINET SECTION

MULLION SECTION A-A

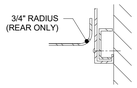

DETAIL B-B

SD-28 WALL CABINET W/ SHELF

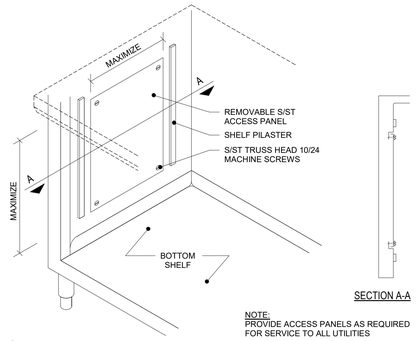

NOTE:
PROVIDE ACCESS PANELS AS REQUIRED FOR SERVICE TO ALL UTILITIES

a CABINET ENDS

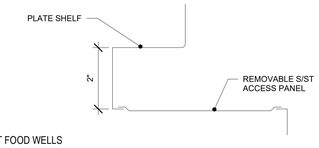

b HOT FOOD WELLS

SD-29 ACCESS PANEL

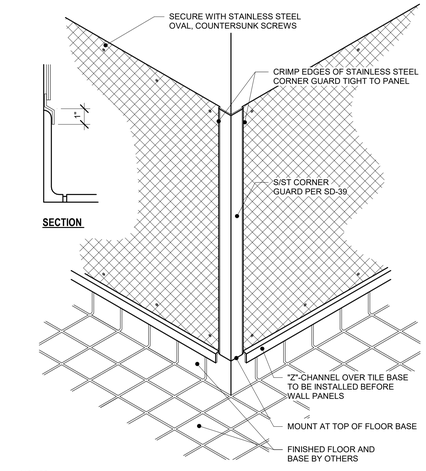

NOTE:
FSEC TO SEAL BOTTOM PERIMETER OF COUNTER CABINET BODIES TO UTILITY CURB. IF GAP IS TOO LARGE TO SEAL, INSTALL CLOSURE TRIM AND THEN SEAL.

SD-30 UTILITY CURB

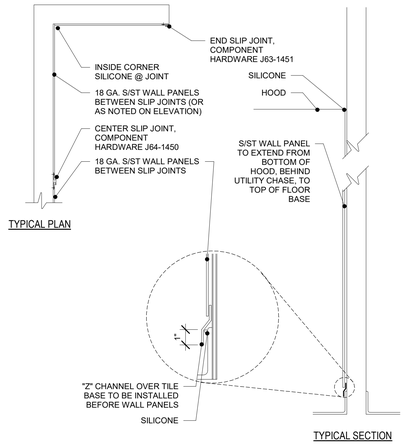

NOTES:
1. SECURE SLIP JOINT TRIM WITH S/ST COUNTERSUNK SCREWS AND APPLY SILICONE SEALANT TO BOTH EDGES OF SLIP JOINT AND PANEL.
2. SLIP S/ST PANELING INTO SLIP JOINT TRIMTURN UP ENDS 2" AT WALLS AND CABINETS
3. APPLY SILICONE SEALANT TO BACK OF S/ST PANELS BEFORE INSTALLING
4. SEAL EXPOSED SEAMS AND PERIMETER OF PANELS WITH SILVER SILICONE SEALANT PER SECTION 114000 - 2.02C

SD-38 STAINLESS STEEL WALL PANEL

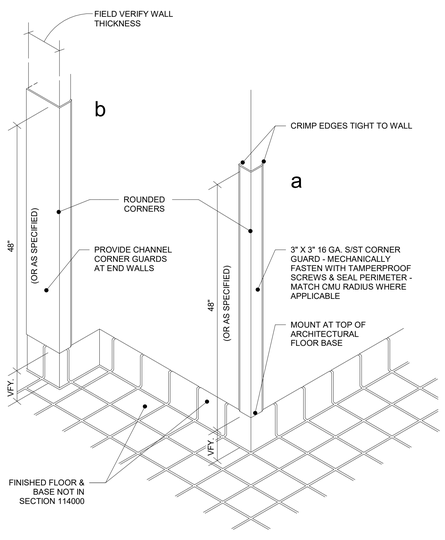

SD-39 STAINLESS STEEL CORNER GUARD

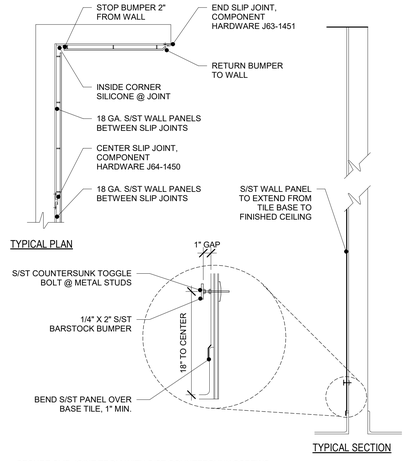

- SECURE SLIP JOINT TROM WITH S/ST COUNTERSUNK SCREWS
- SLIP S/ST PANELING INTO SLIP JOINT TRIM
- APPLY SILICONE SEALANT TO BACK OF S/ST PANELS BEFORE INSTALLING
- SEAL EXPOSED SEAMS WITH SILVER SILICONE SEALANT PER SECTION 114000 - 2.02C
- HOLD BAR STOCK BUMPER AS SHOWN WITH S/ST NUTS
- BUMPER TO EXTEND FULL LENGTH OF PANELS

SD-68 CART WASH S/ST WALL PANEL

NOTES:
1. COORDINATE WALL BACKING AS REQUIRED WITH TRADE CONTRACTORS.
2. 1/4" THICK x 48" HIGH ALUMINUM DIAMOND TREADPLATE PANELS WHERE SHOWN ON PLAN.
3. SEAL PERIMETER OF WALL PANEL WITH APPROVED SEALANT PER PART 2 PRODUCTS OF THE DIVISION 114000.

SD-69 DIAMOND TREADPLATE WALL PANEL

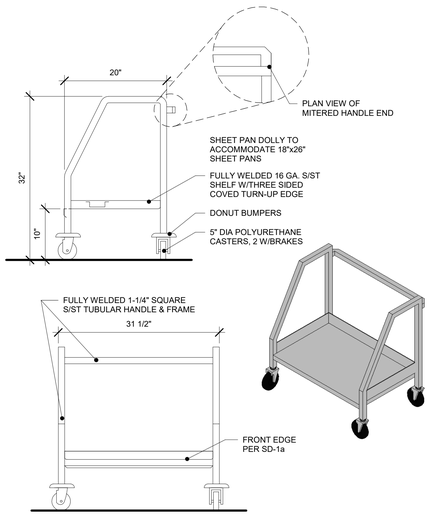

SD-70 SHEET PAN DOLLY

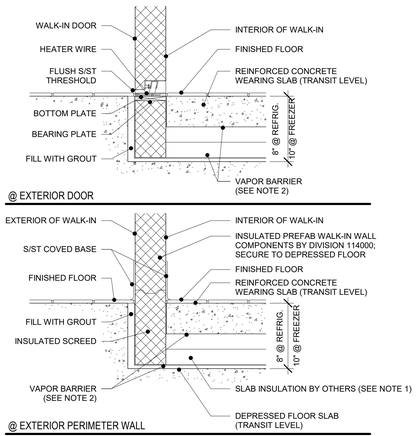

NOTE:
1. INSULATION - STYROFOAM 40 (ph:800-232-2436) OR CERTIFOAM 40 (ph:763-477-5854) HIGH DENSITY EXTRUDED POLYSTYRENE BOARD RATED AT 40 TO 50 PSI, TOTAL THICKNESS OF 4" IN REFRIGERATOR AND 6" IN FREEZER, STAGGER LAYERS AND SPLINE JOINTS.
2. VAPOR BARRIER - MINIMUM OF 6 MIL POLYETHYLENE SHEET, APPLIED DRY WITH 4" OVERLAP, SEALED AT PERIMETER AND JOINTS WITH ASPHALT EMULSION ADHESIVE, TURN END UP AT PERIMETER.
3. ALL MATERIALS EXCEPT WALK-IN WALL, DOOR COMPONENTS AND S/ST BASE PROVIDED BY OTHERS.

SD-184 WALK-IN FLOOR - FLOORLESS WITH HIGH SCREEDS

*HEATED FLOOR MATERIALS AT FREEZER ONLY; SEE SPECIFICATIONS FOR REQMTS.

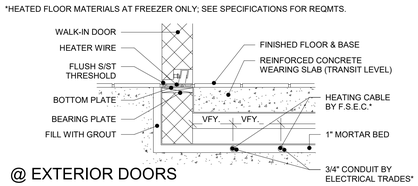

@ EXTERIOR DOORS

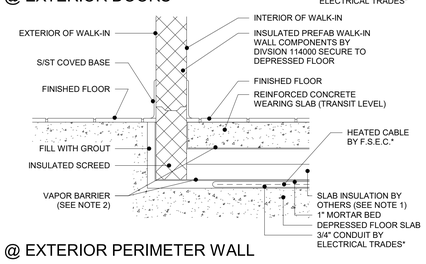

@ EXTERIOR PERIMETER WALL

NOTE:
1. INSULATION - THREE 2" THICK LAYERS AMOFOAM HIGH DENSITY EXTRUDED POLYSTYRENE RATED AT 50 PSI; STAGGER LAYERS AND SPLINE JOINTS.
2. MINIMUM OF 6 MIL POLYETHELENE SHEET, APPLIED DRY WITH 4" OVERLAP, SEALED AT PERIMETER AND JOINTS WITH ASPHALT EMULSION ADHESIVE, TURN END UP AT PERIMETER.
3. ALL MATERIALS EXCEPT WALK-IN WALL, DOOR COMPONENTS HEAT CABLE AND S/ST BASE PROVIDED BY OTHERS.

SD-188 WALK-IN FLOOR - FLOORLESS W/ HIGH SCREEDS, INSUL. W/ HEAT

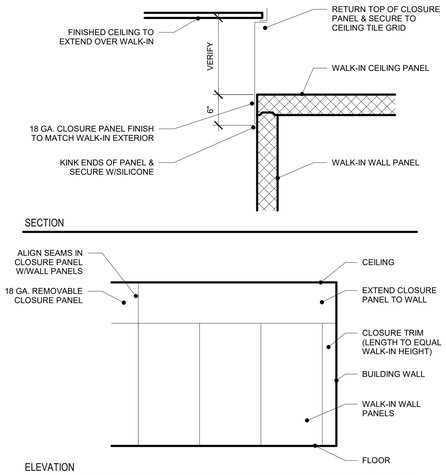

NOTE:
INSTALLATION OF CLOSURE PANELS TO BE DONE AFTER WALK-INS ERECTED SO FIELD MEASUREMENTS CAN BE VERIFIED

SD-193 WALK-IN CLOSURE PANEL - FIXED

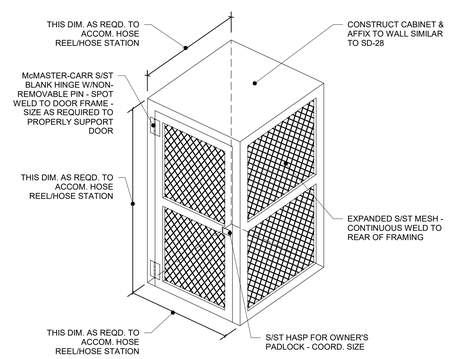

PD-1 HOSE STATION/HOSE REEL CABINET

Farnsworth GROUP
14225 UNIVERSITY AVENUE, SUITE 110
WALKEE, IOWA 50263
(515) 225-3469 / info@f-w.com
www.f-w.com
Engineers | Architects | Surveyors | Scientists

RIPPE ASSOCIATES
FOODSERVICE DESIGN + CONSULTING

kpff

IMEG

Bishop Engineering

ISSUE:

#	DATE:	DESCRIPTION:

BID SET

PROJECT:
STATE OF IOWA DEPARTMENT OF CORRECTIONS

CLARINDA CORRECTIONAL FACILITY - KITCHEN & LAUNDRY ADDITION

2000 N 16TH ST, CLARINDA, IA 51632

DATE:	02/09/2024
DESIGNED:	EG/TP
DRAWN:	MM
REVIEWED:	EG/RB

SHEET TITLE:

FOODSERVICE EQUIPMENT STANDARD DETAILS

SHEET NUMBER:

FS401

PROJECT NO.: 0240202.00
RFB922300-02

2/2/2024 12:16:18 PM

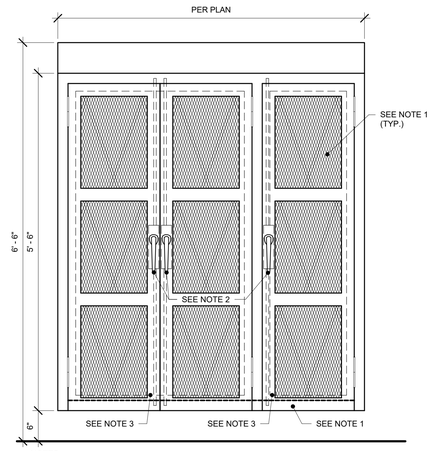

NOTES:
1. CABINET CONSTRUCTION SIMILAR TO SD-28 DOORS SIMILAR TO SD-17 BUT WITH HEAVY-DUTY S/ST EXPANDED MESH FRONTS AS SHOWN

2. McMASTER-CARR LATCHES W/PADLOCK HASP - PROVIDE PADLOCKS KEYED TO MATCH

3. SHADOW BOARD W/HANGER PINS FOR TOOL & BAKERY EQUIP. STORAGE - VERIFY EXACT REQUIREMENTS WITH OWNER

PD-2 SHADOW BOX SECURITY CABINET

Farnsworth GROUP
14225 UNIVERSITY AVENUE, SUITE 110
WALKEE, IOWA 50263
(515) 225-3469 / info@f-w.com
www.f-w.com
Engineers | Architects | Surveyors | Scientists

RIPPE ASSOCIATES
FOODSERVICE DESIGN + CONSULTING

kpff

IMEG

Bishop Engineering

ISSUE:

#	DATE:	DESCRIPTION:

BID SET

PROJECT:
STATE OF IOWA DEPARTMENT OF CORRECTIONS

CLARINDA CORRECTIONAL FACILITY - KITCHEN & LAUNDRY ADDITION

2000 N 16TH ST, CLARINDA, IA 51632

DATE:	02/09/2024
DESIGNED:	EG/TP
DRAWN:	MM
REVIEWED:	EG/RB

SHEET TITLE:

FOODSERVICE EQUIPMENT STANDARD DETAILS

SHEET NUMBER:

FS402

PROJECT NO.: 0240202.00
RFB922300-02

2/2/2024 12:16:23 PM

FOODSERVICE EQUIPMENT ELECTRICAL SCHEDULE

ITEM #	DESCRIPTION		VOLTS	PHASE	AMPS	WATTS	HP	CONN. TYPE	RI HEIGHT	REMARKS
7A	WALK-IN REFRIGERATOR/FREEZER COMPLEX		120 V	1	20.0 A			DIRECT	114"	DFA / NOTE W / SEE DETAIL SD-191
7B	FREEZER FLOOR HEAT	A	208 V	1				DIRECT	48"	DFA / COOK'S ISSUANCE FLOOR HEAT / NOTE W / SEE DETAIL SD-188 / 30 AMP BREAKER / (1) CIRCUIT
7B	FREEZER FLOOR HEAT	B	208 V	1				DIRECT	48"	DFA / MAIN FREEZER FLOOR HEAT / NOTE W / SEE DETAIL SD-188 / 30 AMP BREAKER / (3) CIRCUITS ON ONE CONTACTOR
8A	RACKED REFRIGERATION SYSTEM	A	208 V	3	138.9 A			DIRECT	0"	NOTE D & W / MAX FUSE SIZE 175.0 AMPS / MIN CIRCUIT AMPACITY 148.4 AMPS
8B	REFRIGERATION SYSTEM COIL - PRODUCE REFRIGERATOR	B	120 V	1	1.8 A			DIRECT	96"	NOTE W / (2) COILS @ 1.8 AMPS EACH
8C	REFRIGERATION SYSTEM COIL - MEAT & DAIRY REFRIGERATOR	C	120 V	1	1.8 A			DIRECT	96"	NOTE W / (2) COILS @ 1.8 AMPS EACH
8D	REFRIGERATION SYSTEM COIL - TEMPERING REFRIGERATOR	D	208 V	1	13.7 A			DIRECT	96"	NOTE W
8E	FREEZER SYSTEM COIL - MAIN FREEZER	E	208 V	1	22.8 A			DIRECT	96"	NOTE W / (2) COILS @ 22.8 AMPS EACH
8F	FREEZER SYSTEM COIL - BAKERY FREEZER	F	208 V	1	9.1 A			DIRECT	96"	NOTE W
8G	REFRIGERATION SYSTEM COIL - BAKERY REFRIGERATOR	G	120 V	1	1.8 A			DIRECT	96"	NOTE W
11	HEATED AIR CURTAIN	A	480 V	3	22.0 A		1/2, 1/2	DIRECT	96"	PROVIDE 30 AMP CIRCUIT
11	HEATED AIR CURTAIN	B	480 V	3	28.3 A		1/2, 1/2	DIRECT	96"	PROVIDE 35 AMP CIRCUIT
12	AIR CURTAIN		120 V	1	3.4 A		1/5, 1/5	DIRECT	96"	PROVIDE 15 AMP CIRCUIT
13	MANUAL SLIDING DOOR (FRZ)		120 V	1	3.0 A			DIRECT	86"	ELECTRICAL TRADES TO PROVIDE AND INSTALL FROSTOP DISCONNECT KEYSWITCH / FINAL CONNECTIONS BY ELECTRICAL TRADES
26	BENCH SCALE		120 V	1				RECEPT.	18"	AC ADAPTER W/INTERNAL BATTERY
34	FOOD CUTTER		120 V	1	13.0 A		1	RECEPT.	60"	NOTE X / INTERCHANGEABLE PLUG IN LOCATION W/ITEM #114 / VFY. UTILITIES W/OWNER
40	MOBILE HOT/COLD TRANSPORT CART		120 V	1				RECEPT.	0"	NOTE X / VFY. UTILITIES W/OWNER / (13) CIRCUITS SERVICED THRU #41A & B
41A	UTILITY DISTRIBUTION SYSTEM		120 V	1				DIRECT	126"	(6) 20.0 AMP CIRCUITS TO SERVICE (6) #40 / FSEC TO PREWIRE RECEPTACLES IN UDS / FINAL CONNECTIONS BY ELECTRICAL TRADES / SEE SHEET FSE101
41B	UTILITY DISTRIBUTION SYSTEM		120 V	1				DIRECT	126"	(7) 20.0 AMP CIRCUITS TO SERVICE (7) #40 / FSEC TO PREWIRE RECEPTACLES IN UDS / FINAL CONNECTIONS BY ELECTRICAL TRADES / SEE SHEET FSE102
62	WORKCOUNTER W/SINK		120 V	1				DIRECT	10"	NOTE A / STUB UP THRU ADJACENT WALL / (3) 20.0 AMP CIRCUITS TO SERVICE (1) #71 & (2) CONV. DRS
63	140 QUART MIXER		208 V	3	14.8 A		5	DIRECT	60"	ADD ALTERNATE / ELECTRICAL TRADES TO ROUGH-IN AND CAP AS NEEDED
64	WATER METER W/TEMPERATURE RANGE		120 V	1	5.0 A			RECEPT.	54"	ADD ALTERNATE / ELECTRICAL TRADES TO ROUGH-IN AND CAP AS NEEDED
67	SPIRAL MIXER		208 V	3	32.0 A		15	DIRECT	48"	ADD ALTERNATE / ELECTRICAL TRADES TO ROUGH-IN AND CAP AS NEEDED
69	SHEETER		120 V	1	8.3 A			RECEPT.	60"	ADD ALTERNATE / ELECTRICAL TRADES TO ROUGH-IN AND CAP AS NEEDED
71	DIGITAL BENCH SCALE	A	120 V	1				DUPLEX	0"	AC ADAPTER W/INTERNAL BATTERY
71	DIGITAL BENCH SCALE	B	120 V	1				DUPLEX	0"	SERVICED THRU #77A / ADD ALTERNATE / ELECTRICAL TRADES TO ROUGH-IN AND CAP AS NEEDED / AC ADAPTER W/INTERNAL BATTERY
74	ROLL-IN PROOFER, 2 DOUBLE RACKS		208 V	3		5000 W		DIRECT	90"	NEUTRAL WIRE CIRCUITRY NEEDED TO PROVIDE 120V CONTROL / ADD ALTERNATE / ELECTRICAL TRADES TO ROUGH IN AND CAP AS NEEDED
77	BAKERY WORKCOUNTER W/RICHLITE TOP	A	120 V	1				DIRECT	10"	NOTE A / STUB UP THRU CURB / (4) 20.0 AMP CIRCUITS TO SERVICE (2) CONV. DRS & #71B & 79
77	BAKERY WORKCOUNTER W/RICHLITE TOP	AA	120 V	1				DIRECT	10"	NOTE A / STUB UP THRU CURB / (4) 20.0 AMP CIRCUITS TO SERVICE (3) CONV. DRS & (1) #83
77	BAKERY WORKCOUNTER W/RICHLITE TOP	B	208 V	3				DIRECT	10"	NOTE A / STUB UP THRU CURB / (1) 20.0 AMP CIRCUIT TO SERVICE #78
78	DIVIDER ROUNDER		208 V	3	10.0 A		3/4	DIRECT	0"	SERVICED THRU #77B / ADD ALTERNATE / ELECTRICAL TRADES TO ROUGH-IN AND CAP AS NEEDED
79	BREAD SLICER		120 V	1	7.0 A		1/2	RECEPT.	0"	SERVICED THRU #77A / ADD ALTERNATE / ELECTRICAL TRADES TO ROUGH-IN AND CAP AS NEEDED
83	BUN SLICER		120 V	1	6.8 A	816 W	1/3	RECEPT.	0"	SERVICED THRU #77AA / ADD ALTERNATE / ELECTRICAL TRADES TO ROUGH-IN AND CAP AS NEEDED
85	ROLL-IN BLAST CHILLER	A	208 V	3	10.6 A	3400 W		DIRECT	106"	
85	BLAST CHILLER REMOTE CONDENSING UNIT	B	208 V	3	53.3 A	16400 W	9	DIRECT	0"	
87	RACK OVEN, 2-SEC.		120/208 V	3		1800 W		DIRECT	90"	NOTE I, L & X
89	FIRE PROTECTION SYSTEM	A	120 V	1				DIRECT		NOTE J, K & L / AT CEILING / WIRING FOR CONTROLS / SEE DETAIL / TO SERVE (1) #87
89	ELECTRIC GAS VALVE	B	120 V	1				DIRECT	120"	DFA DEDICATED, NON-INTERRUPTED CIRCUIT
90	FIRE PROTECTION SYSTEM	A	120 V	1				DIRECT		NOTE J, K & L / AT CEILING / WIRING FOR CONTROLS / SEE DETAIL / TO SERVE (1) #87
90	ELECTRIC GAS VALVE	B	120 V	1				DIRECT	120"	DFA / DEDICATED, NON-INTERRUPTED CIRCUIT
91	ICE MAKER		208 V	1	4.2 A			RECEPT.	66"	
109	FOOD PROCESSOR		120 V	1	12.0 A		1.5	RECEPT.	52"	NOTE X / VFY UTILITIES W/OWNER
112	REACH-IN REFRIGERATOR, 2-SEC.		120 V	1	10.7 A		1/3	RECEPT.	84"	NOTE X / VFY UTILITIES W/OWNER
114	SLICER		120 V	1	6.0 A	720 W	1/2	RECEPT.	60"	NOTE X / INTERCHANGEABLE PLUG IN LOCATION W/ITEM #34 / VFY. UTILITIES W/OWNER
116	HORIZONTAL CUTTER/MIXER		208 V	3	22.0 A		5	RECEPT.	18"	PROVIDE 30 AMP CIRCUIT / ADD ALTERNATE / ELECTRICAL TRADES TO ROUGH IN AND CAP AS NEEDED
132	STACKED WASHER/DRYER	A	120 V	1			.9	RECEPT.	30"	PROVIDE 15 AMP CIRCUIT
132	STACKED WASHER/DRYER	B	120 V	1			1/3	RECEPT.	30"	PROVIDE 15 AMP CIRCUIT
142	MOBILE WARMING CABINET	A	120 V	1	12.0 A	1500 W		RECEPT.	0"	(1) SERVICED THRU #145 A (2) SERVICED THRU #146
142	MOBILE WARMING CABINET	B	120 V	1	12.0 A	1500 W		RECEPT.	30"	
144	80 QUART MIXER		208 V	3	12.0 A		3	DIRECT	0"	NOTE X / VFY UTILITIES W/OWNER / SERVICED THRU #145 B
145	WORKCOUNTER W/SINKS	A	120 V	1				DIRECT	10"	NOTE A / STUB UP THRU CURB / (4) 20.0 AMP CIRCUITS TO SERVICE (3) CONV. DRS & (1) #142A
145	WORKCOUNTER W/SINKS	B	208 V	3				DIRECT	10"	NOTE A / STUB UP THRU CURB / (1) 20.0 AMP CIRCUIT TO SERVICE #144
146	WORKCOUNTER W/SINKS		120 V	1				DIRECT	10"	NOTE A / STUB UP THRU CURB / (6) 20.0 AMP CIRCUITS TO SERVICE (4) CONV. DRS & (2) #142
148	EXHAUST HOOD (TYPE I)	A	120 V	1		400 W		DIRECT	108"	DFA / NOTE I / SEE DETAIL
148	EXHAUST HOOD (TYPE I)	B	120 V	1		400 W		DIRECT	108"	DFA / NOTE I / SEE DETAIL
148	EXHAUST HOOD (TYPE I)	C	120 V	1		400 W		DIRECT	108"	DFA / NOTE I / SEE DETAIL
150	UTILITY DISTRIBUTION SYSTEM		120/208 V	3	20.0 A			DIRECT	110"	DFA / NOTE Y
151	FIRE PROTECTION SYSTEM	A	120 V	1				DIRECT		NOTE J, K & L / AT CEILING / WIRING FOR CONTROLS / SEE DETAIL / TO SERVE #148 A, B & C
151	ELECTRIC GAS VALVE	B	120 V	1				DIRECT	120"	DFA / DEDICATED, NON-INTERRUPTED CIRCUIT
153	DEMAND CONTROL VENTILATION SYSTEM		120 V	1	15.0 A			DIRECT	36"	SEE DETAIL / TO SERVICE HOOD #148
154	60 GALLON KETTLE		120 V	1	10.0 A			RECEPT.	0"	NOTE L / SERVICED THRU #150
155	80 GALLON KETTLE		120 V	1	10.0 A			RECEPT.	0"	NOTE L / SERVICED THRU #150
158	STEAMER, 2-SEC.	A	120 V	1	2.0 A			DIRECT	0"	NOTE L & X / SERVICED THRU #150 / FLEXIBLE CONDUIT
160	STEAMER, 2-SEC.	A	120 V	1	2.0 A			DIRECT	0"	NOTE L & X / SERVICED THRU #150 / FLEXIBLE CONDUIT
161	STEAMER, 2-SEC.	A	120 V	1	2.0 A			DIRECT	0"	NOTE L / SERVICED THRU #150 / FLEXIBLE CONDUIT
163	RACK OVEN, 2-SEC.		120/208 V	3		1800 W		DIRECT	90"	NOTE I & L
169	FIRE PROTECTION SYSTEM	A	120 V	1				DIRECT		NOTE J, K & L / AT CEILING / WIRING FOR CONTROLS / SEE DETAIL / TO SERVE (1) #163
169	ELECTRIC GAS VALVE	B	120 V	1				DIRECT	120"	DFA / DEDICATED, NON-INTERRUPTED CIRCUIT
170	FIRE PROTECTION SYSTEM	A	120 V	1				DIRECT		NOTE J, K & L / AT CEILING / WIRING FOR CONTROLS / SEE DETAIL / TO SERVE (1) #163
170	ELECTRIC GAS VALVE	B	120 V	1				DIRECT	120"	DFA / DEDICATED, NON-INTERRUPTED CIRCUIT
174	DISPOSER		208 V	3	8.8 A		3	DIRECT	18"	NOTE C / SEE DETAIL
182	HOSE STATION		120 V	1			2	RECEPT.	84"	
187	DISPOSER		208 V	3	8.8 A		3	DIRECT	18"	NOTE C / SEE DETAIL
189	FLIGHT-TYPE DISHMACHINE W/DRYER	A	480 V	3	86.3 A			DIRECT	80"	DFA / NOTE I

GENERAL NOTES - ELECTRICAL

NOTE: GENERAL NOTES REFER TO GENERAL CONDITIONS. ALL CONDITIONS MAY NOT EXIST ON THIS PROJECT.

1. THESE DRAWINGS ARE FOR USE BY THE PROJECT ENGINEERS IN PREPARING THEIR DRAWINGS. THESE DRAWINGS ARE INCIDENTAL TO OUR SERVICES AND MUST BE REVIEWED AND APPROVED BY A PROPERLY LICENSED DESIGN PROFESSIONAL BEFORE BEING USED FOR ANY OTHER PURPOSES. RIPPE ASSOCIATES IS NOT LICENSED AS A DESIGN PROFESSIONAL AND DOES NOT HOLD ITSELF OUT AS SUCH.
2. SERVICES SHOWN ON THIS PLAN ARE EQUIPMENT REQUIREMENTS FOR FOODSERVICE EQUIPMENT ONLY. LOCATIONS, SIZES AND HEIGHTS ABOVE FINISHED FLOOR ARE APPROXIMATELY AS REQUIRED BY EQUIPMENT TO BE FURNISHED. SINCE MULTIPLE SOURCES FOR THE EQUIPMENT MAY BE SPECIFIED, SLIGHT VARIATIONS IN UTILITY LOADS, CONNECTION SIZES AND NEMA PLUG CONFIGURATIONS CAN OCCUR. DESIGN BUILDING UTILITY SYSTEM ACCORDINGLY AND ADD NOTES TO THE ELECTRICAL CONTRACT DOCUMENTS INDICATING SLIGHT VARIATIONS ARE TO BE INCLUDED IN ELECTRICAL TRADES WORK AT NO ADDITIONAL COST.
3. THESE DRAWINGS ARE NOT TO BE USED TO ROUGH-IN AND/OR TO SET SLEEVES BY. SINCE REQUIRED ALLOWANCES MUST BE MADE FOR MULTIPLE EQUIPMENT SOURCES AND FOR VALVES, FITTINGS, DISCONNECTS, ETC. WHICH WILL BE FURNISHED UNDER ELECTRICAL TRADES. FSEC IS RESPONSIBLE FOR PREPARING DIMENSIONED ROUGH-IN AND SLEEVE LOCATION PLANS PER SPECIFICATIONS TO ACCOMMODATE THE EXACT EQUIPMENT BEING PROVIDED.
4. ALL 120V DUPLEX RECEPTACLES TO BE MINIMUM 20 AMP. CIRCUIT AND MOUNTED VERTICALLY, UNLESS OTHERWISE NOTED ON PLAN.
5. ELECTRICAL TRADES TO PROVIDE ALL NECESSARY DISCONNECT SWITCHES FOR EQUIPMENT INSTALLED AHEAD OF EQUIPMENT CONTROL OR SWITCH.
6. THE FSEC IS RESPONSIBLE FOR SETTING THE EQUIPMENT IN PLACE. FINAL CONNECTION FOR THIS EQUIPMENT IS THE RESPONSIBILITY OF THE ELECTRICAL TRADES.
7. HOLES IN FOODSERVICE EQUIPMENT FOR ELECTRICAL SERVICES PROVIDED BY FSEC.
8. BUILDING POWER PANEL BREAKERS SERVING FOODSERVICE EQUIPMENT SHOULD BE EQUIPPED WITH GROUND FAULT INTERRUPT PROTECTION IN ACCORDANCE WITH NATIONAL ELECTRIC CODE FOLLOWED BY MUNICIPALITY AND/OR LOCAL CODE. DO NOT PROVIDE GROUND FAULT INTERRUPT RECEPTACLES AT THE EQUIPMENT UNLESS RECEPTACLE IS READILY ACCESSIBLE WITHOUT HAVING TO MOVE EQUIPMENT OR EMPLOY A STEP LADDER.
9. UTILITY CONNECTIONS SHOWN ARE THOSE REQUIRED TO SERVICE FOOD SERVICE EQUIPMENT ONLY. MECHANICAL TRADES SHOULD VERIFY WITH OWNER WHETHER ADDITIONAL UTILITIES ARE REQUIRED FOR EXISTING, FUTURE OR VENDOR FURNISHED NON-FOODSERVICE EQUIPMENT LOCATED WITHIN THE AREA SHOWN ON THIS PLAN.
10. DESIGN INCOMING UTILITY SERVICES TO ACCOMMODATE 100% OF THE LOADS INDICATED; DO NOT APPLY DIVERSITY FACTOR AS ALL EQUIPMENT CAN BE OPERATING SIMULTANEOUSLY DURING PEAK SERVICE PERIODS.

SCHEDULE NOTES - ELECTRICAL

NOTE: SCHEDULE NOTES PERTAIN TO INDIVIDUAL ITEMS AS INDICATED IN THE FOODSERVICE EQUIPMENT ELECTRICAL SCHEDULE.

A THE FSEC WILL PROVIDE RECEPTACLES IN FABRICATED EQUIPMENT AS REQUIRED AND WILL PREWIRE ELECTRICAL COMPONENTS IN COUNTER TO JUNCTION BOXES IN COUNTER BASE FOR FINAL CONNECTION BY ELECTRICAL TRADES. INTERCONNECTIONS BETWEEN SECTIONS OF FABRICATED COUNTERS BY FSEC.

C. WIRE THRU TIME DELAY RELAY, SOLENOID VALVE AND CONTROL PANEL TO DISPOSER.

D. ALL REFRIGERATION SYSTEMS ARE LOCATED APPROXIMATELY WHERE SHOWN ON THE PLAN UNLESS OTHERWISE NOTED. THE FOLLOWING ITEMS ARE NOT BY THE FSEC: ROOF CURBS/CONCRETE PADS; SLEEVED & SEALED PENETRATIONS IN ROOFS/FLOORS/CEILINGS/WALLS. VERIFY EXACT LOCATON WITH ARCHITECT/ENGINEER.

I. ELECTRICAL TRADES TO WIRE AUTOMATIC CONTROLS OR INTERLOCK DEVICE BETWEEN EQUIPMENT AND EXHAUST FAN SO EXHAUST FAN TURNS ON ONCE EQUIPMENT IS OPERATIONAL.

J. ELECTRICAL TRADES TO INTERWIRE FIRE PROTECTION SYSTEM WITH BUILDING ALARM SYSTEM AND TO MAKE-UP AIR FAN SHUT-OFF.

K. FIRE PROTECTION SYSTEM REQUIRES 24 HOUR, EMERGENCY SEPARATE ELECTRICAL SERVICE. ELECTRICAL TRADES TO INTERWIRE FIRE PROTECTION SYSTEM WITH ELECTRICAL GAS SHUT-OFF VALVE FOR ALL COOKING EQUIPMENT BELOW HOODS. ELECTRICAL TRADES TO ALSO INTERWIRE FIRE PROTECTION SYSTEM WITH BUILDING ALARM SYSTEM.

L. ELECTRICAL TRADES TO INTERWIRE FIRE PROTECTION SYSTEM TO POWER SHUT-OFF DEVICE, SUPPLIED BY ELECTRICAL TRADES, SO THAT POWER TO ALL ELECTRIC COOKING EQUIPMENT AND CONVENIENCE RECEPTACLES BELOW HOODS IS SHUT OFF UPON ACTIVATION OF THE FIRE PROTECTION SYSTEM.

W. INTERCONNECT THIS EQUIPMENT WITH BUILDING EMERGENCY POWER.

X. THIS EQUIPMENT IS EXISTING. MECHANICAL/ELECTRICAL TRADES TO DISCONNECT, FSEC TO RELOCATE AND SET IN PLACE, FINAL RE-CONNECTION BY MECHANICAL/ELECTRICAL TRADES. MECHANICAL/ELECTRICAL TRADES TO COORDINATE UTILITY REQUIREMENTS WITH FSEC PRIOR TO ROUGH-IN.

Y. WHEN A UTILITY DISTRIBUTION SYSTEM IS SPECIFIED, ELECTRICAL TRADES SHALL:
1.INSTALL MAIN SERVICE FEEDERS AND OVERCURRENT PROTECTION DEVICES; INSTALL ELECTRICAL CONDUIT AND WIRING FROM ROUGH-IN LOCATION TO RACEWAY TERMINALS IN VERTICAL CHASE BY SYSTEM MANUFACTURER.
2.CONNECT UL LISTED POWER SUPPLY CORDS AND PREWIRED FLEXIBLE CONDUIT SET, ALL PROVIDED BY SYSTEM MANUFACTURER WITH APPROPRIATE EQUIPMENT ITEMS.
3.INTERCONNECT FIRE PROTECTION SYSTEM MICROSWITCH OR RELAY TO POWER SHUT-OFF DEVICE FOR MAIN SERVICE FEEDERS.
4.PROVIDE 24 VOLT POWER SUPPLY CIRCUIT FROM CONTROL BOX IN RISER TO AUTOMATIC STEAM SHUT-OFF VALVE. SEE DETAIL.
5.SPECIAL NOTE – NO MODIFICATION OF ANY MANUFACTURED RACEWAY SHALL BE UNDERTAKEN BY ANY ENTITY WITHOUT THE EXPRESS, WRITTEN APPROVAL AND/OR SUPERVISION OF THE RACEWAY MANUFACTURER.

THE FSEC WILL:

1.INTERCONNECT FIELD JOINTS BY BOLTING BUSBAR AND/OR WIRING TOGETHER. ALL FITTINGS, BOLTS, ETC. SHALL BE PRE-FITTED AND FURNISHED BY THE SYSTEM MANUFACTURER. THE CONTROL WIRE FIELD JOINT WILL BE PROVIDED WITH A QUICK-DISCONNECT DEVICE.

2.INSPECT FOR LOOSE CONNECTIONS CAUSED BY SHIPPING AND TIGHTEN AS REQUIRED.

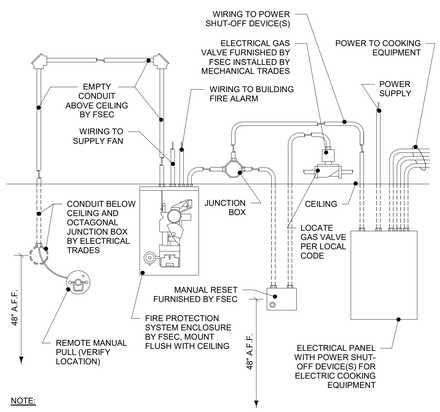

NOTE:

1. ELECTRICAL COMPONENTS AND INTERWIRING BY ELECTRICAL TRADES UNLESS NOTED OTHERWISE.
2. CONDUIT CONCEALED IN WALL WHEREVER POSSIBLE. EXPOSED CONDUIT TO BE CHROME-PLATED.

WET CHEMICAL FIRE PROTECTION SYSTEM

WIRING DIAGRAM - ELECTRIC GAS VALVE

ROBERT RIPPE & ASSOCIATES, INC. © 2011 ROBERT RIPPE

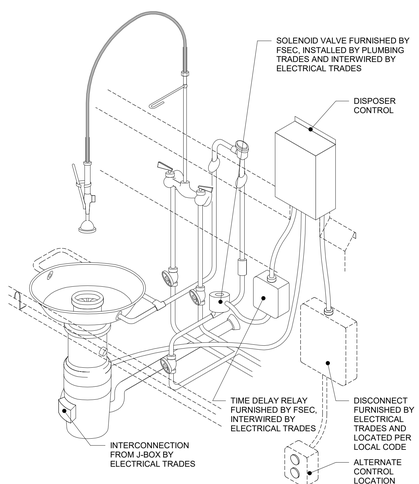

DISPOSER

WITH TIME DELAY RELAY

ROBERT RIPPE & ASSOCIATES, INC. © 2011 ROBERT RIPPE

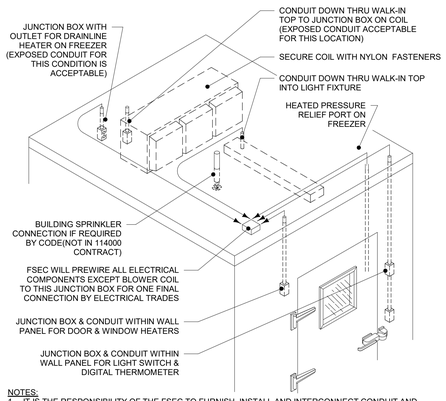

NOTES:

1. IT IS THE RESPONSIBILITY OF THE FSEC TO FURNISH, INSTALL AND INTERCONNECT CONDUIT AND WIRING FOR ELECTRICAL COMPONENTS INCLUDING LIGHTS, SWITCHES, THERMOMETERS, DOOR, WINDOW, PRESSURE RELIEF PORT HEATERS AND RECEPTACLE FOR DRAINLINE HEATER TO EASILY ACCESSIBLE JUNCTION BOX ON TOP OF WALK-IN FOR FINAL CONNECTION BY ELECTRICAL TRADES
2. ALL INTERCONNECTING CONDUIT RUN ABOVE WALK-IN PANELS OR WITHIN WALL PANELS. EXPOSED CONDUIT INSIDE WALK-IN WILL NOT BE ACCEPTABLE EXCEPT FOR THE CONNECTIONS SHOWN AND NOTED IN THE ABOVE ILLUSTRATION.
3. SEAL PENETRATIONS THROUGH CEILING, WALLS AND INSIDE ELECTRICAL CONDUIT OUTSIDE AND INSIDE WALK-IN WITH DOW CORNING #999A SILICONE SEALANT.
4. PROVIDE HOLES FOR SPRINKLER HEAD (IF REQUIRED) AND ELECTRICAL CONDUIT.
5. PROVIDE 1/2" OD PVC CONDUIT AT ALL PENETRATIONS THRU INSULATED PANELS

WALK-IN REFRIGERATOR/FREEZER SD-191

ROBERT RIPPE & ASSOCIATES, INC. © 2011 ROBERT RIPPE

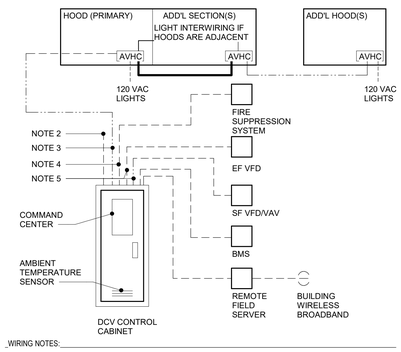

WIRING NOTES:

1. ALL WIRING OF ELECTRICAL EQUIPMENT MUST BE DONE TO MEET NEC AND LOCAL CODES.
2. (2) WIRES AND GROUND FROM DCV CONTROL CABINET TO NON-INTERRUPTIBLE SUPPLY VOLTAGE SERVICE BY ELECTRICAL CONTRACTOR.
3. (1) CAT 5 CABLE FROM DCV CONTROL CABINET TO THE PRIMARY HOOD AVHC BY ELECTRICAL CONTRACTOR.
4. (2) WIRES FROM DCV CONTROL CABINET TO FIRE SUPPRESSION SYSTEM MICRO SWITCHES BY ELECTRICAL CONTRACTOR.
5. (6) WIRE LOW VOLTAGE CABLE FROM DCV CONTROL CABINET TO EACH VFD BY ELECTRICAL CONTRACTOR.

LEGEND

- FIELD WIRING BY E.C.
- WIRING BY GAYLORD
- CAT 5 FIELD WIRING BY E.C.
- CAT 5 FIELD WIRING BY GAYLORD

GAYLORD DCV SYSTEM

ELECTRICAL WIRING DETAIL

ROBERT RIPPE & ASSOCIATES, INC. © 2011 ROBERT RIPPE

ELECTRICAL LEGEND

	DR	DUPLEX RECEPTACLE
	SR	SINGLE RECEPTACLE
	FR	FLOOR RECEPTACLE
S	SW	SWITCH
	V	VOLTS
	AMP	AMPERES
	PH	PHASE
	W	WATTS
	KW	KILOWATT
	HP	HORSEPOWER
	JB	JUNCTION BOX
		EMPTY JUNCTION BOX
	+	DISTANCE ABOVE FINISHED FLOOR
	DN+	BRING SERVICE DOWN FROM ABOVE CEILING TO A DISTANCE ABOVE FINISHED FLOOR
	COMP	COMPRESSOR
		MOTOR
		SOLENOID
		DATA OUTLET
		VOICE OUTLET
	AFF	ABOVE FINISHED FLOOR
	CLG	CEILING
	DFA	DOWN FROM ABOVE
	ET	ELECTRICAL TRADES
	ELEC	ELECTRICAL
	FSEC	FOODSERVICE EQUIPMENT CONTRACTOR

Farnsworth GROUP
14225 UNIVERSITY AVENUE, SUITE 110
WALKEE, IOWA 50263
(515) 225-3469 / info@f-w.com
www.f-w.com
Engineers | Architects | Surveyors | Scientists

RIPPE ASSOCIATES
FOODSERVICE DESIGN + CONSULTING

kpff

IMEG

Bishop Engineering

ISSUE:

#	DATE:	DESCRIPTION:

BID SET

PROJECT:

STATE OF IOWA DEPARTMENT OF CORRECTIONS

CLARINDA CORRECTIONAL FACILITY - KITCHEN & LAUNDRY ADDITION

2000 N 16TH ST, CLARINDA, IA 51632

DATE:	02/09/2024
DESIGNED:	EG/TP
DRAWN:	MM
REVIEWED:	EG/RB

SHEET TITLE:

FOODSERVICE EQUIPMENT ELECTRICAL SCHEDULE & DETAILS

SHEET NUMBER:

FSE100

PROJECT NO.: 0240202.00
RFB922300-02

2/20/2024 12:10:23 PM

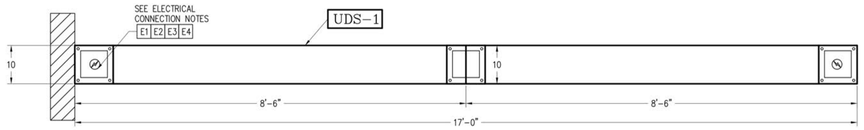

PLAN VIEW

ELECTRICAL CONTRACTOR

- ☒ E1. COOKING EQUIPMENT CIRCUIT BREAKERS MOUNTED IN A REMOTE LOCATION. PROVIDED BY OTHERS.
- ☒ E2. RECEPTACLES MOUNTED IN UDS BY GAYLORD. ALL WIRING FROM REMOTE CIRCUIT BREAKERS PANEL TO RECEPTACLES BY ELECTRICAL CONTRACTOR.
- ☒ E3. POWER SOURCE STUB-IN LOCATION (DOWN FROM CEILING)
- ☒ E4. CONNECT ALL WIRES AT FIELD JOINTS. TERMINAL BLOCKS ARE MARKED FOR APPROPRIATE CONNECTION. (REFER TO PLAN OR ELEVATION VIEW FOR FIELD JOINT LOCATIONS)
- ☒ E5. INSPECT FOR ANY LOOSE CONNECTIONS CAUSED BY SHIPPING AND TIGHTEN AS NEEDED.

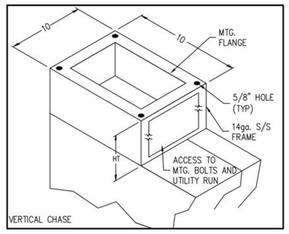

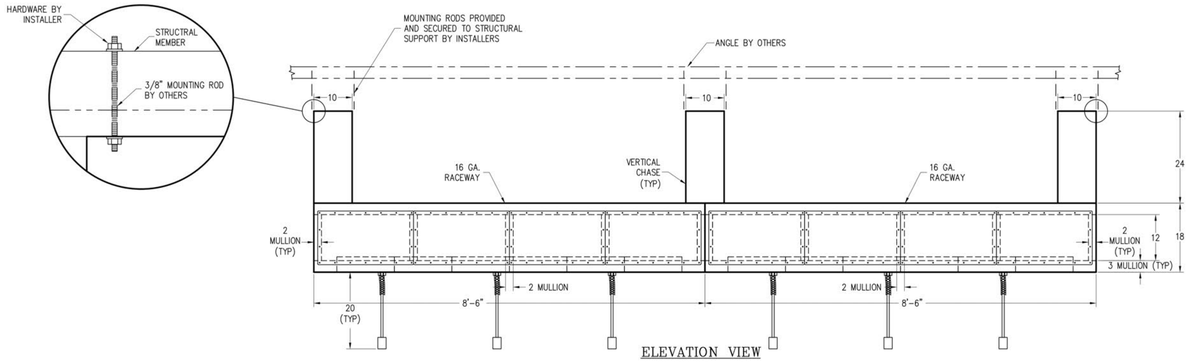

ELEVATION VIEW

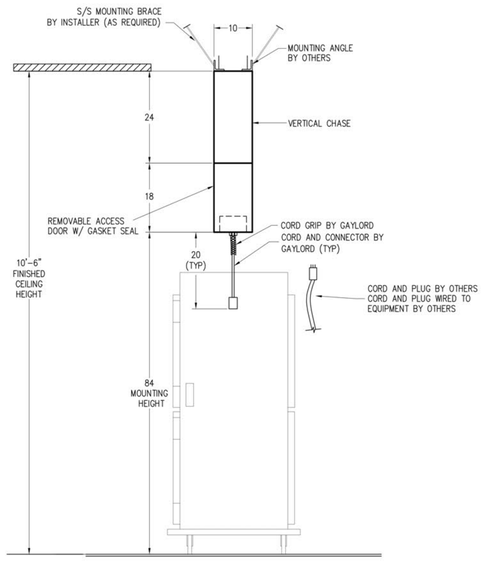

SECTION VIEW

SYMBOL CHART

- ELECTRICAL CONNECTION
- AIR INLET
- EQUIPMENT CONNECTION CALLOUT
- ELECTRICAL CALLOUT
- PLUMBING CALLOUT

VERIFY CEILING CONDITIONS

EXACT FLOOR TO STRUCTURAL CEILING AND FLOOR TO FINISH CEILING HEIGHTS MUST BE VERIFIED FOR UTILITY DISTRIBUTION SYSTEM DESIGN. INCORRECT HEIGHTS MAY CAUSE THE UDS TO NOT FIT PROPERLY, UTILITY CONNECTION MAT NOT REACH EQUIPMENT PROPERLY OR COMPLY WITH CLEARANCES SPECIFIED IN APPLICABLE CODES AND STANDARDS.

FLOOR TO STRUCTURAL CEILING: (VERIFY)

FLOOR TO FINISH CEILING: 10'-6" (VERIFY)

ELECTRICAL NOTE

ELECTRICAL CONTRACTOR TO PROVIDE EACH BRANCH CIRCUIT BREAKER AND WIRING TO THE UDS TERMINAL BLOCKS, AND GROUND TERMINAL LUG. FOR COMPLETE SHUT OFF OF ELECTRICAL POWER, MAIN CIRCUIT BREAKER SHOULD BE TURNED OFF.

IMPORTANT NOTES:

1) EQUIPMENT MAKE, MODEL MUST BE VERIFIED TO ASSURE CORRECT UTILITY LOADS, PRIOR TO RELEASE FOR FABRICATION. ANY CHANGES TO THE EQUIPMENT AFTER APPROVAL OR RELEASE, WILL ADD COST AND EFFECT SHIPPING DATES.

2) SEE U.D.S. SCHEDULE FOR EQUIPMENT CONNECTIONS

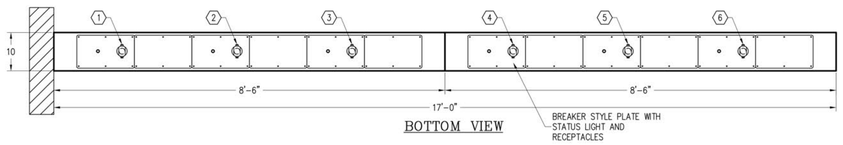

BOTTOM VIEW

UDS WIRING DIAGRAM

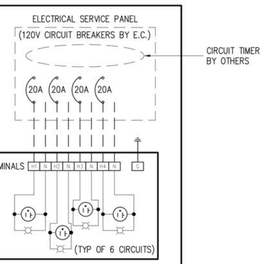

UDS SCHEDULE

EQUIPMENT					ELECTRICAL																				REMARKS	BILL NUMBER			
ITEM NO.	CONN. NO.	DESCRIPTION	MFG.	MODEL	K.W.	VOLTS	PH.	AMPS		BREAKER SIZE	BREAKER POLE	WIRE SIZE	CORD SIZE	CORD LENGTH	CIRCUIT TYPE							QTY		QTY	CONN. NO.
	1	ELEC. CONN.	JONES ZYLON	JZHR-168	1.80	120	1	15		20	1	12	–	–	GFCI						NEMA 5-20R CONNECTOR				1
	2	ELEC. CONN.	JONES ZYLON	JZHR-168	1.80	120	1	15		20	1	12	–	–	GFCI						NEMA 5-20R CONNECTOR				2
	3	ELEC. CONN.	JONES ZYLON	JZHR-168	1.80	120	1	15		20	1	12	–	–	GFCI						NEMA 5-20R CONNECTOR				3
	4	ELEC. CONN.	JONES ZYLON	JZHR-168	1.80	120	1	15		20	1	12	–	–	GFCI						NEMA 5-20R CONNECTOR				4
	5	ELEC. CONN.	JONES ZYLON	JZHR-168	1.80	120	1	15		20	1	12	–	–	GFCI						NEMA 5-20R CONNECTOR				5
	6	ELEC. CONN.	JONES ZYLON	JZHR-168	1.80	120	1	15		20	1	12	–	–	GFCI						NEMA 5-20R CONNECTOR				6
TOTAL CONNECTED LOAD																					REMARKS				
RESERVE FOR FUTURE																									
SERVICE SIZE BY OTHERS																									

SHOP NOTES (T2)

* CEILING MOUNT UDS

UDS COMPONENTS

		DESCRIPTION	MANUFACTURER	MODEL #	REMARKS	BILL #	QTY
		120/1PH/20A CONNECTOR (NEMA 5-20)	HUBBELL	HBL5369		50382	6
		CORD GRIP (1/2" NPT, 0.625"-0.75")	HUBBELL	074011247		50024	6

DIMENSION TOLERANCE ± 1/4" (6mm)

DH-CM-E3-17 (T2)	UDS-1	22168901
MODEL #	ITEM #	WORK ORDER #

INSTALLATION INFORMATION

REV	DRWN.BY	DATE	REVISIONS	CHECKED BY
01	RD	09-06-22	REVISED EQUIPMENT TO 1.8 KW, 15 AMPS	
00	EP	08-25-22	INITIAL DESIGN	

This plan is made from available information, but measurements are to be verified by contractors, installers and others in connection with this job. Gaylord Industries accepts no responsibility for work done by contractors, installers and others, and will not stand any expense for changes made necessary by local building codes, ordinances, structural conditions or by the substitution or changes in equipment shown in this plan. This plan must be verified and approved by proper parties before fabrication can be started and approval shall not be made unless contractors, installers and others have reviewed applicable codes with code authorities. Reference is made to the general notes, which are a part of these plans and all contractors, installers and others utilizing these plans are advised they are responsible for examining and becoming familiar with said general notes before commencing any work hereunder. Any inconsistencies between these plans and the general notes, or between these plans, the general notes, and local building codes or ordinances must be immediately called to the attention of Gaylord Industries in writing so that any such inconsistencies can be resolved. Gaylord Industries must be notified of any changes made to the plan in a clear and conspicuous manner. Gaylord Industries will not be responsible for any incidental or consequential damages incurred by others as a result of contractors, installers and others failure to notify Gaylord of changes to the plan.

ATTENTION – This plan is the property of Gaylord Industries and is confidential and proprietary. It is not to be copied, reproduced, or distributed, in whole or part, nor be used in anyway detrimental to Gaylord Industries. If you have received this plan without Gaylord's permission, please (i) do not read it, (ii) reply to the sender that you received the drawing in error, and (iii) erase and/or destroy the drawing.

GAYLORD® INDUSTRIES
10900 S.W. AVERY ST.
TUALATIN, OR 97062
TELEPHONE: (503) 691-2010
TOLL FREE: (800) 547-9696
FAX NO.: (503) 692-6048
E-MAIL: gaylord@gaylordusa.com

DRAWN BY:	CHECKED BY:	ELECT. CHECK:	F.P. CHECK:	S.E. APPROVAL:
EP				

CLARINDA CORRECTIONAL FACILITY
CLARINDA, IA

DRAWING NO.:	DATE:		REV.:	SHEET NO.:
22-1689	08-25-22		00	01

Farnsworth GROUP
14225 UNIVERSITY AVENUE, SUITE 110
WALKEE, IOWA 50263
(515) 225-3469 / info@f-w.com
www.f-w.com
Engineers | Architects | Surveyors | Scientists

RIPPE ASSOCIATES
FOODSERVICE DESIGN + CONSULTING

kpff

IMEG

Bishop Engineering

ISSUE:

#	DATE:	DESCRIPTION:

BID SET

PROJECT:
STATE OF IOWA DEPARTMENT OF CORRECTIONS

CLARINDA CORRECTIONAL FACILITY - KITCHEN & LAUNDRY ADDITION

2000 N 16TH ST, CLARINDA, IA 51632

DATE:	02/09/2024
DESIGNED:	EG/TP
DRAWN:	MM
REVIEWED:	EG/RB

SHEET TITLE:

FOODSERVICE EQUIPMENT ELECTRICAL DETAILS - UDS #41A

SHEET NUMBER:

FSE101

PROJECT NO.: 0240202.00
RFB922300-02

2/2/2024 12:16:29 PM

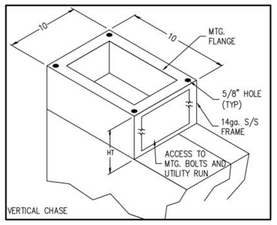

SYMBOL CHART
⊘ ELECTRICAL CONNECTION
❀ AIR INLET
⬡ EQUIPMENT CONNECTION CALLOUT
☐ ELECTRICAL CALLOUT
◇ PLUMBING CALLOUT

NSF, UL, CSA

VERIFY CEILING CONDITIONS

EXACT FLOOR TO STRUCTURAL CEILING AND FLOOR TO FINISH CEILING HEIGHTS MUST BE VERIFIED FOR UTILITY DISTRIBUTION SYSTEM DESIGN. INCORRECT HEIGHTS MAY CAUSE THE UDS TO NOT FIT PROPERLY, UTILITY CONNECTION MAT NOT REACH EQUIPMENT PROPERLY OR COMPLY WITH CLEARANCES SPECIFIED IN APPLICABLE CODES AND STANDARDS.

FLOOR TO STRUCTURAL CEILING: (VERIFY)

FLOOR TO FINISH CEILING: 10'-6" (VERIFY)

ELECTRICAL NOTE

ELECTRICAL CONTRACTOR TO PROVIDE EACH BRANCH CIRCUIT BREAKER AND WIRING TO THE UDS TERMINAL BLOCKS, AND GROUND TERMINAL LUG. FOR COMPLETE SHUT OFF OF ELECTRICAL POWER, MAIN CIRCUIT BREAKER SHOULD BE TURNED OFF.

IMPORTANT NOTES:

1) EQUIPMENT MAKE, MODEL MUST BE VERIFIED TO ASSURE CORRECT UTILITY LOADS, PRIOR TO RELEASE FOR FABRICATION. ANY CHANGES TO THE EQUIPMENT AFTER APPROVAL OR RELEASE, WILL ADD COST AND EFFECT SHIPPING DATES.

2) SEE U.D.S. SCHEDULE FOR EQUIPMENT CONNECTIONS

UDS WIRING DIAGRAM

— — — FIELD WIRING

———— FACTORY WIRING

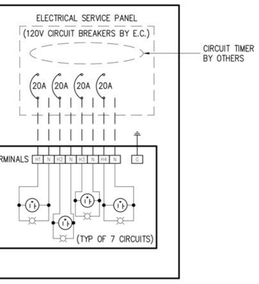

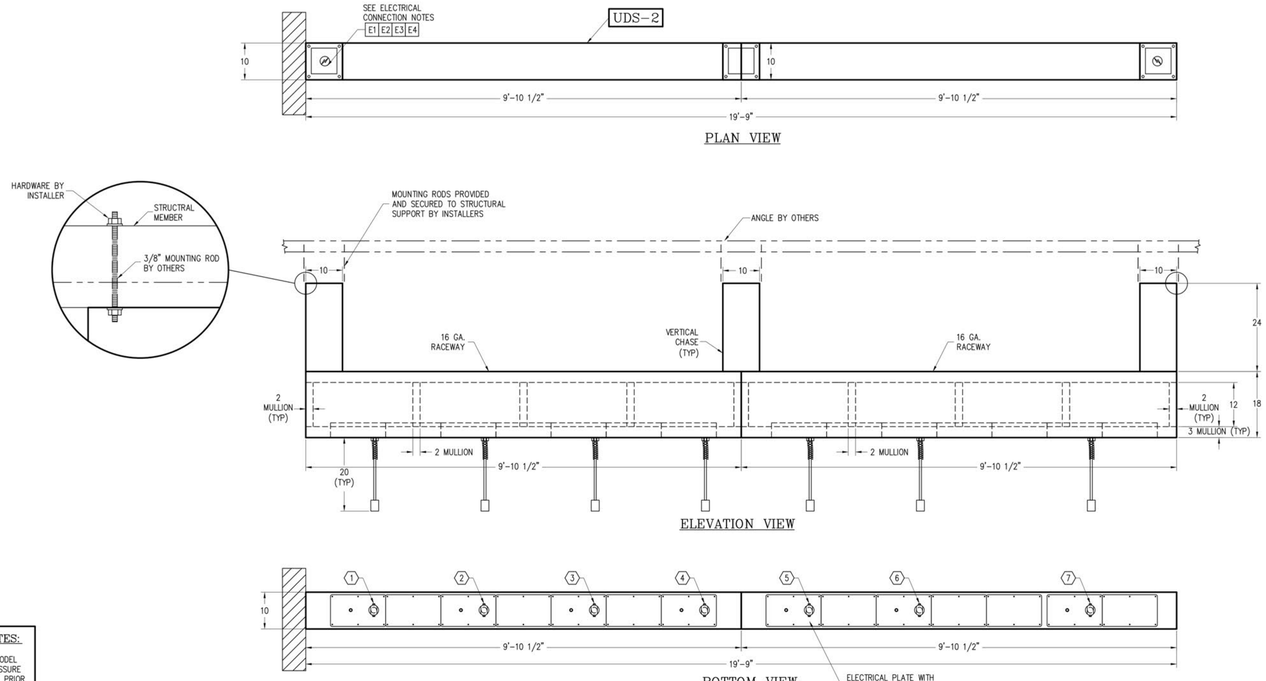

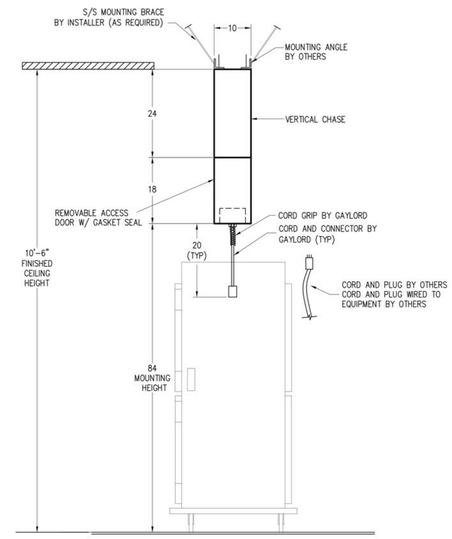

SECTION VIEW

ELECTRICAL CONTRACTOR

- ☒ E1. COOKING EQUIPMENT CIRCUIT BREAKERS MOUNTED IN A REMOTE LOCATION. PROVIDED BY OTHERS.
- ☒ E2. RECEPTACLES MOUNTED IN UDS BY GAYLORD. ALL WIRING FROM REMOTE CIRCUIT BREAKERS PANEL TO RECEPTACLES BY ELECTRICAL CONTRACTOR.
- ☒ E3. POWER SOURCE STUB-IN LOCATION (DOWN FROM CEILING)
- ☒ E4. CONNECT ALL WIRES AT FIELD JOINTS. TERMINAL BLOCKS ARE MARKED FOR APPROPRIATE CONNECTION. (REFER TO PLAN OR ELEVATION VIEW FOR FIELD JOINT LOCATIONS)
- ☒ E5. INSPECT FOR ANY LOOSE CONNECTIONS CAUSED BY SHIPPING AND TIGHTEN AS NEEDED.

SHOP NOTES (T2)

* CEILING MOUNT UDS

UDS SCHEDULE

EQUIPMENT					ELECTRICAL														REMARKS	BILL NUMBER				CONN. NO.
ITEM NO.	CONN. NO.	DESCRIPTION	MFG.	MODEL	K.W.	VOLTS	PH.	AMPS		BREAKER SIZE	BREAKER POLE	WIRE SIZE	CORD SIZE	CORD LENGTH	CIRCUIT TYPE						QTY		QTY	
	1	ELEC. CONN.	JONES ZYLON	JZHR-168	1.80	120	1	15		20	1	12	–	–	GFCI				NEMA 5-20R CONNECTOR					1
	2	ELEC. CONN.	JONES ZYLON	JZHR-168	1.80	120	1	15		20	1	12	–	–	GFCI				NEMA 5-20R CONNECTOR					2
	3	ELEC. CONN.	JONES ZYLON	JZHR-168	1.80	120	1	15		20	1	12	–	–	GFCI				NEMA 5-20R CONNECTOR					3
	4	ELEC. CONN.	JONES ZYLON	JZHR-168	1.80	120	1	15		20	1	12	–	–	GFCI				NEMA 5-20R CONNECTOR					4
	5	ELEC. CONN.	JONES ZYLON	JZHR-168	1.80	120	1	15		20	1	12	–	–	GFCI				NEMA 5-20R CONNECTOR					5
	6	ELEC. CONN.	JONES ZYLON	JZHR-168	1.80	120	1	15		20	1	12	–	–	GFCI				NEMA 5-20R CONNECTOR					6
	7	ELEC. CONN.	JONES ZYLON	JZHR-168	1.80	120	1	15		20	1	12	–	–	GFCI				NEMA 5-20R CONNECTOR					7
																			REMARKS					
TOTAL CONNECTED LOAD																								
RESERVE FOR FUTURE																								
SERVICE SIZE BY OTHERS																								

UDS COMPONENTS

		DESCRIPTION	MANUFACTURER	MODEL #	REMARKS	BILL #	QTY
		120/1PH/20A CONNECTOR (NEMA 5-20)	HUBBELL	HBL5369		50382	7
		CORD GRIP (1/2" NPT, 0.625"-0.75")	HUBBELL	074011247		50024	7

DIMENSION TOLERANCE ± 1/4" (6mm)

DH-CM-E3-19.75 (T2)	UDS-2	22168902
MODEL #	ITEM #	WORK ORDER #

DRAWN BY:	CHECKED BY:	ELECT. CHECK:	F.P. CHECK:	S.E. APPROVAL:
EP				

CLARINDA CORRECTIONAL FACILITY

CLARINDA, IA

DRAWING NO.:	DATE:		REV.:	SHEET NO.:
22-1689	08-25-22		00	02

INSTALLATION INFORMATION

REV	DRWN.BY	DATE	REVISIONS	CHECKED BY
01	RD	09-06-22	REVISED EQUIPMENT TO 1.8 KW, 15 AMPS	
00	EP	08-25-22	INITIAL DESIGN	

This plan is made from available information, but measurements are to be verified by contractors, installers and others in connection with this job. Gaylord Industries accepts no responsibility for work done by contractors, installers and others, and will not stand any expense for charges made necessary by local building codes, ordinances, structural conditions or by the substitution or changes in equipment shown in this plan. This plan must be verified and approved by proper parties before fabrication can be started and approval shall not be made unless contractors, installers and others have reviewed applicable codes with code authorities. Reference is made to the general notes, which are a part of these plans and all contractors, installers and others utilizing these plans are advised they are responsible for examining and becoming familiar with said general notes before commencing any work hereunder. Any inconsistencies between these plans and the general notes, or between these plans, the general notes, and local building codes or ordinances must be immediately called to the attention of Gaylord Industries in writing so that any such inconsistencies can be resolved. Gaylord Industries must be notified of any changes made to the plan in a clear and conspicuous manner. Gaylord Industries will not be responsible for any incidental or consequential damages incurred by others as a result of contractors, installers and others failure to notify Gaylord of changes to the plan.

ATTENTION – This plan is the property of Gaylord Industries and is confidential and proprietary. It is not to be copied, reproduced, or distributed, in whole or part, nor be used in anyway detrimental to Gaylord Industries. If you have received this plan without Gaylord's permission, please (i) do not read it, (ii) reply to the sender that you received the drawing in error, and (iii) erase and/or destroy the drawing.

GAYLORD® INDUSTRIES

10900 S.W. AVERY ST.
TUALATIN, OR 97062

TELEPHONE: (503) 691-2010
TOLL FREE: (800) 547-9696
FAX NO.: (503) 692-6048
E-MAIL: gaylord@gaylordusa.com

Farnsworth GROUP
14225 UNIVERSITY AVENUE, SUITE 110
WALKEE, IOWA 50263
(515) 225-3469 / info@f-w.com
www.f-w.com
Engineers | Architects | Surveyors | Scientists

RIPPE ASSOCIATES
FOODSERVICE DESIGN + CONSULTING

kpff

IMEG

Bishop Engineering

ISSUE:

#	DATE:	DESCRIPTION:

BID SET

PROJECT:

STATE OF IOWA DEPARTMENT OF CORRECTIONS

CLARINDA CORRECTIONAL FACILITY - KITCHEN & LAUNDRY ADDITION

2000 N 16TH ST, CLARINDA, IA 51632

DATE:	02/09/2024
DESIGNED:	EG/TP
DRAWN:	MM
REVIEWED:	EG/RB

SHEET TITLE:

FOODSERVICE EQUIPMENT ELECTRICAL DETAILS - UDS #41B

SHEET NUMBER:

FSE102

PROJECT NO.: 0240202.00

RFB922300-02

2/22/2024 12:16:43 PM

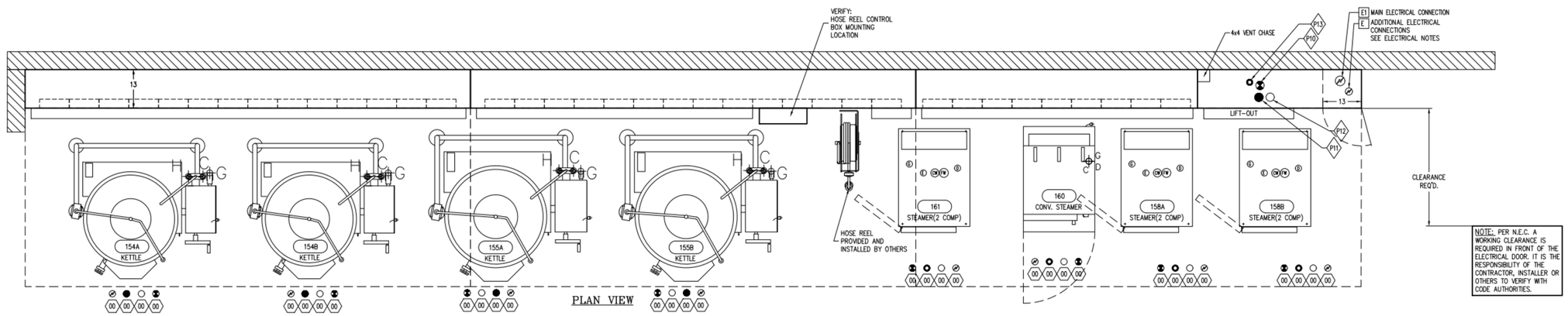

NOTE: PER N.E.C. A WORKING CLEARANCE IS REQUIRED IN FRONT OF THE ELECTRICAL DOOR. IT IS THE RESPONSIBILITY OF THE CONTRACTOR, INSTALLER OR OTHERS TO VERIFY WITH CODE AUTHORITIES.

PLAN VIEW

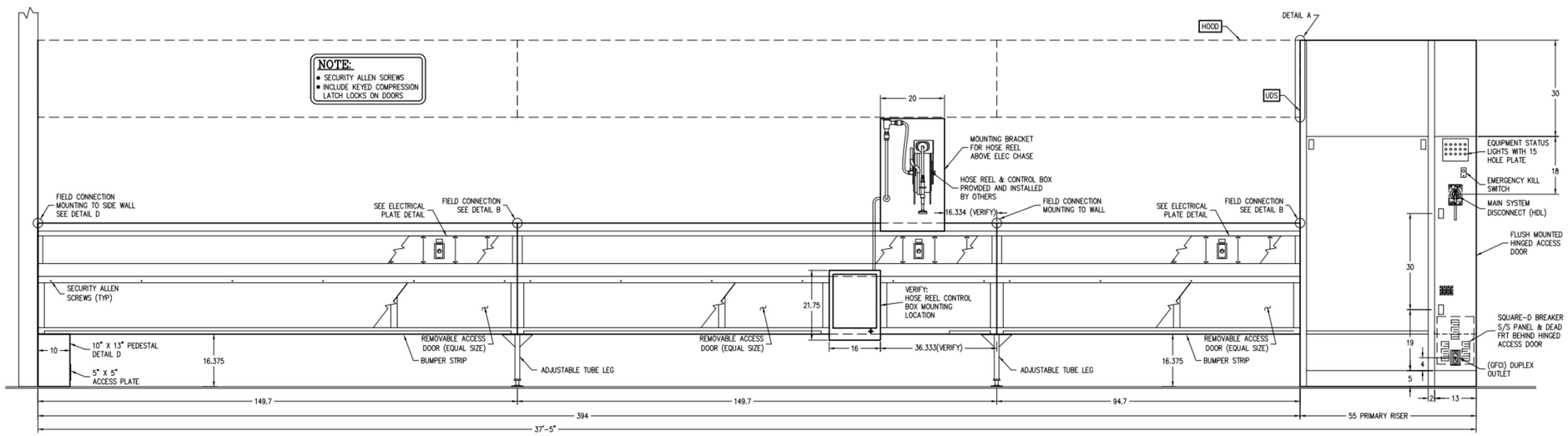

NOTE:
- SECURITY ALLEN SCREWS
- INCLUDE KEYED COMPRESSION LATCH LOCKS ON DOORS

ELEVATION VIEW

DIMENSION TOLERANCE ± 1/4" (6mm)

DH-WM-E3-HC-G-37.42	148.1	
MODEL #	ITEM #	WORK ORDER #

INSTALLATION INFORMATION

REV	DRWN.BY	DATE	REVISIONS	CHECKED BY
09	EP	11-11-22	MOVED PRIMARY RISER BACK BEHIND HOOD	
08	JA	11-02-22	REVISE UDS RISER OUTSIDE OF HOOD	
07	JA	10-25-22	REVISE FOR HOSE REEL BRACKET ABOVE ELEC CHASE AND 13" UDS DEPTH	
06	JA	10-11-22	ADD UDS TO DRAWINGS	

This plan is made from available information, but measurements are to be verified by contractors, installers and others in connection with this job. Gaylord Industries accepts no responsibility for work done by contractors, installers and others, and will not stand any expense for changes made necessary by local building codes, ordinances, structural conditions or by the substitution or changes in equipment shown in this plan. This plan must be verified and approved by proper parties before fabrication can be started and approval shall not be made unless contractors, installers and others have reviewed applicable codes with code authorities. Reference is made to the general notes, which are a part of these plans and all contractors, installers and others utilizing these plans are advised they are responsible for examining and becoming familiar with said general notes before commencing any work hereunder. Any inconsistencies between these plans and the general notes, or between these plans, the general notes, and local building codes or ordinances must be immediately called to the attention of Gaylord Industries in writing so that any such inconsistencies can be resolved. Gaylord Industries must be notified of any changes made to the plan in a clear and conspicuous manner. Gaylord Industries will not be responsible for any incidental or consequential damages incurred by others as a result of contractors, installers and others failure to notify Gaylord of changes to the plan.

ATTENTION – This plan is the property of Gaylord Industries and is confidential and proprietary. It is not to be copied, reproduced, or distributed, in whole or part, nor be used in anyway detrimental to Gaylord Industries. If you have received this plan without Gaylord's permission, please (i) do not read it, (ii) reply to the sender that you received the drawing in error, and (iii) erase and/or destroy the drawing.

GAYLORD® INDUSTRIES
10900 S.W. AVERY ST.
TUALATIN, OR 97062
TELEPHONE: (503) 691-2010
TOLL FREE: (800) 547-9696
FAX NO.: (503) 692-6048
E-MAIL: gaylord@gaylordusa.com

DRAWN BY:	CHECKED BY:	ELECT. CHECK:	F.P. CHECK:	S.E. APPROVAL:
JA				

CLARINDA CORRECTIONAL FACILITY

CLARINDA, IA

DRAWING NO.:	DATE:		REV.:	SHEET NO.:
22-1632	08-26-22		09	04

GAYLORD®

Farnsworth GROUP
14225 UNIVERSITY AVENUE, SUITE 110
WALKEE, IOWA 50263
(515) 225-3469 / info@f-w.com
www.f-w.com
Engineers | Architects | Surveyors | Scientists

RIPPE ASSOCIATES
FOODSERVICE DESIGN + CONSULTING

kpff

IMEG

Bishop Engineering

ISSUE:

#	DATE:	DESCRIPTION:

BID SET

PROJECT:

STATE OF IOWA DEPARTMENT OF CORRECTIONS

CLARINDA CORRECTIONAL FACILITY - KITCHEN & LAUNDRY ADDITION

2000 N 16TH ST, CLARINDA, IA 51632

DATE:	02/09/2024
DESIGNED:	EG/TP
DRAWN:	RB
REVIEWED:	EG/RB

SHEET TITLE:

FOODSERVICE EQUIPMENT ELECTRICAL DETAILS - UDS #150

SHEET NUMBER:

FSE103

PROJECT NO.: 0240202.00
RFB922300-02

2/2/2024 12:16:56 PM

ITEM	DESCRIPTION	MAKE	MODEL	ELECTRICAL 120/208 (127/220)							GAS		WATER			NOTES
							AMPS/PH			BREAK			FILTERED	H.W.	C.W.	
				KW	VOLTS	PH	L1	L2	L3	ER	MBH	CONN	WATER	CONN	CONN	
154A	KETTLE	CLEVELAND	KGL-60-T		120	1	10			20	190	3/4		1/2	1/2	
154B	KETTLE	CLEVELAND	KGL-60-T		120	1		10		20	190	3/4		1/2	1/2	
155A	KETTLE	CLEVELAND	KGL-80-T		120	1			10	20	190	3/4		1/2	1/2	
155B	KETTLE	CLEVELAND	KGL-80-T		120	1	10			20	190	3/4		1/2	1/2	
158A	STEAMER	CLEVELAND	24-CGA-10	0.2	120	1		2			125	3/4	3/4		3/4	
158B	STEAMER	CLEVELAND	24-CGA-10	0.2	120	1		2			125	3/4	3/4		3/4	
160	STEAMER	VULCAN	C24GA	0.2	120	1		2			125	3/4	3/4		3/4	
161	STEAMER	CLEVELAND	24-CGA-10	0.2	120	1		2			125	3/4	3/4		3/4	
	HOSE REEL BY OTHERS													1/2	1/2	
	DUPLEX OUTLET				120	1			3	20						
	HOOD LIGHTS				120	1			3	20						
	HOOD CONTROLS				120	1			3	20						
TOTAL CONNECTED LOAD						3	20	18	19		1260		3/4	3/4	3/4	
							31.25	28.125	29.6875							
RESERVE FOR FUTURE						3	80	82	81							
TOTAL SERVICE SIZE						AMPS	100				1575					
											3" SINGLE					

DIMENSION TOLERANCE ± 1/4" (6mm)

DH-WM-E3-HC-G-37.42			148.1		
MODEL #			ITEM #		WORK ORDER #
DRAWN BY: JA	CHECKED BY:	ELECT. CHECK:	F.P. CHECK:	S.E. APPROVAL:	

CLARINDA CORRECTIONAL FACILITY

CLARINDA, IA

DRAWING NO.:	DATE:		REV.:	SHEET NO.:
22-1632	08-26-22		09	06

INSTALLATION INFORMATION

REV	DRWN.BY	DATE	REVISIONS	CHECKED BY
09	EP	11-11-22	NO CHANGE	
08	JA	11-02-22	NO CHANGE	
07	JA	10-25-22	NO CHANGE	
06	JA	10-11-22	ADD UDS TO DRAWINGS	

This plan is made from available information, but measurements are to be verified by contractors, installers and others in connection with this job. Gaylord Industries accepts no responsibility for work done by contractors, installers and others, and will not stand any expense for charges made necessary by local building codes, ordinances, structural conditions or by the substitution or changes in equipment shown in this plan. This plan must be verified and approved by proper parties before fabrication can be started and approval shall not be made unless contractors, installers and others have reviewed applicable codes with code authorities. Reference is made to the general notes, which are a part of these plans and all contractors, installers and others utilizing these plans are advised they are responsible for examining and becoming familiar with said general notes before commencing any work hereunder. Any inconsistencies between these plans and the general notes, or between these plans, the general notes, and local building codes or ordinances must be immediately called to the attention of Gaylord Industries in writing so that any such inconsistencies can be resolved. Gaylord Industries must be notified of any changes made to the plan in a clear and conspicuous manner. Gaylord Industries will not be responsible for any incidental or consequential damages incurred by others as a result of contractors, installers and others failure to notify Gaylord of changes to the plan.

ATTENTION – This plan is the property of Gaylord Industries and is confidential and proprietary. It is not to be copied, reproduced, or distributed, in whole or part, nor be used in anyway detrimental to Gaylord Industries. If you have received this plan without Gaylord's permission, please (i) do not read it, (ii) reply to the sender that you received the drawing in error, and (iii) erase and/or destroy the drawing.

GAYLORD® INDUSTRIES

10900 S.W. AVERY ST.
TUALATIN, OR 97062

TELEPHONE: (503) 691-2010
TOLL FREE: (800) 547-9696
FAX NO.: (503) 692-6048
E-MAIL: gaylord@gaylordusa.com

Farnsworth GROUP
14225 UNIVERSITY AVENUE, SUITE 110
WALKEE, IOWA 50263
(515) 225-3469 / info@f-w.com
www.f-w.com
Engineers | Architects | Surveyors | Scientists

RIPPE ASSOCIATES
FOODSERVICE DESIGN + CONSULTING

kpff

IMEG

Bishop Engineering

ISSUE:

#	DATE:	DESCRIPTION:

BID SET

PROJECT:
STATE OF IOWA DEPARTMENT OF CORRECTIONS

CLARINDA CORRECTIONAL FACILITY - KITCHEN & LAUNDRY ADDITION

2000 N 16TH ST, CLARINDA, IA 51632

DATE:	02/09/2024
DESIGNED:	EG/TP
DRAWN:	RB
REVIEWED:	EG/RB

SHEET TITLE:

FOODSERVICE EQUIPMENT ELECTRICAL DETAILS - UDS #150

SHEET NUMBER:

FSE104

PROJECT NO.: 0240202.00
RFB922300-02

2/2/2024 12:16:50 PM

LEGEND	
TAG	DESCRIPTION
CB1	CIRCUIT BREAKER FOR OUTLET
CB2	CIRCUIT BREAKER FOR LIGHTS & CONTROL
CR_	RELAY
	RELAY BASE
DB	DISTRIBUTION BLOCK
DO	DUPLEX OUTLET (GFCI)
EKS	EMERGENCY KILL SWITCH
	N.O. & N.C. CONTACTS
HLS	HOOD LIGHT SWITCH
GRB	GAS RESET BUTTON
	N.O. & N.C. CONTACTS
	LAMP HOLDER
	BULB 6V
	TRANSFORMER 120V/6V
GV	GAS VALVE(S)
DBF	DISTRIBUTION BLOCK FIELD CONNECTION
MCB	MAIN SHUNT TRIP BREAKER(S)
C-150	FAN ON OFF SWITCH
SW_	FIRE SYSTEM DUAL MICRO SWITCH
— — — —	FIELD WIRING
———	FACTORY WIRING

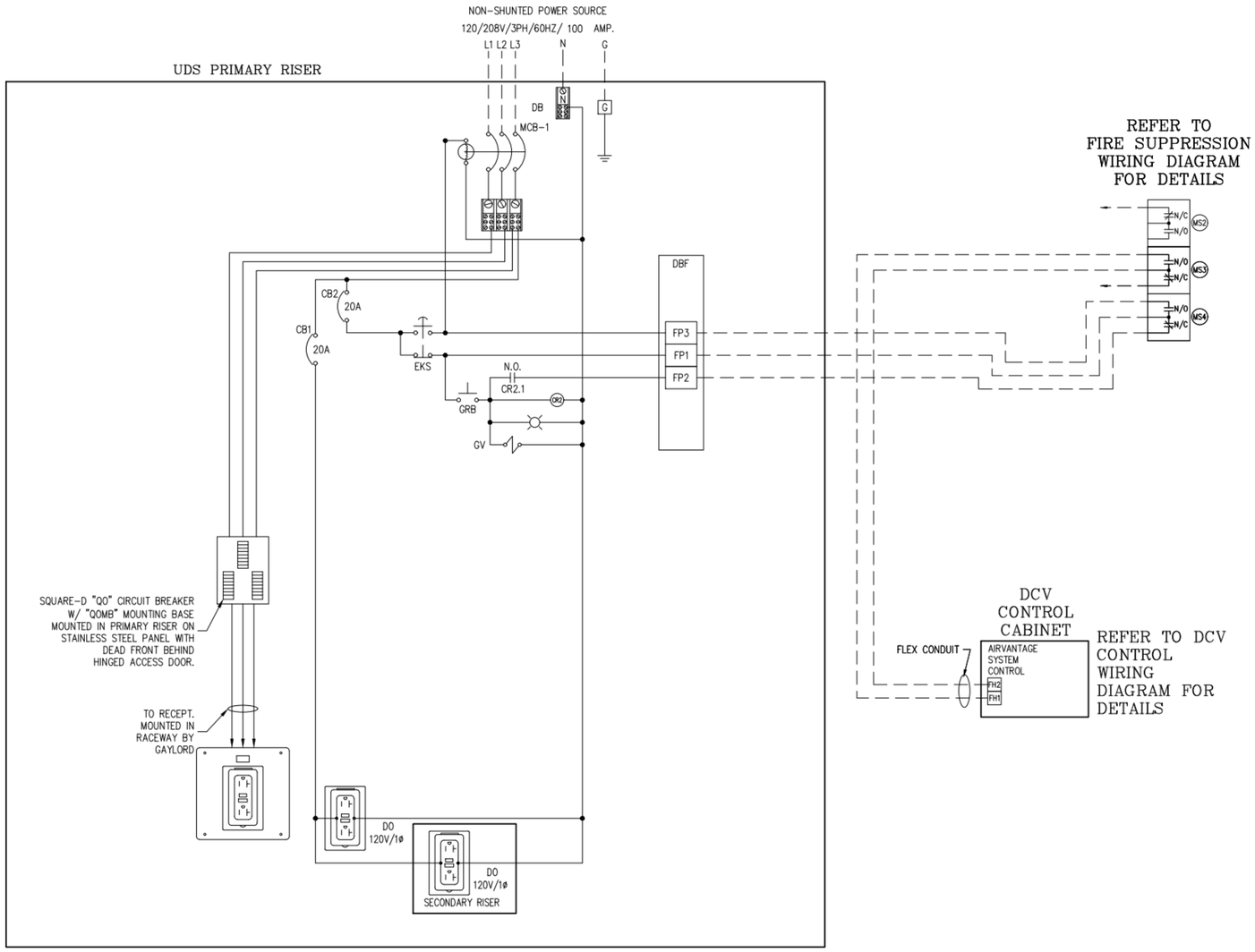

DIMENSION TOLERANCE ± 1/4" (6mm)

MODEL #	ITEM #	WORK ORDER #
DH-WM-E3-HC-G-37.42	148.1	

DRAWN BY:	CHECKED BY:	ELECT. CHECK:	F.P. CHECK:	S.E. APPROVAL:
JA				

CLARINDA CORRECTIONAL FACILITY

CLARINDA, IA

DRAWING NO.:	DATE:		REV.:	SHEET NO.:
22-1632	08-26-22		09	07

INSTALLATION INFORMATION

REV	DRWN.BY	DATE	REVISIONS	CHECKED BY
09	EP	11-11-22	ADDED WIRING DIAGRAM	
08	JA	11-02-22	NO CHANGE	
07	JA	10-25-22	NO CHANGE	
06	JA	10-11-22	ADD UDS TO DRAWINGS	

This plan is made from available information, but measurements are to be verified by contractors, installers and others in connection with this job. Gaylord Industries accepts no responsibility for work done by contractors, installers and others, and will not stand any expense for changes made necessary by local building codes, ordinances, structural conditions or by the substitution or changes in equipment shown in this plan. This plan must be verified and approved by proper parties before fabrication can be started and approval shall not be made unless contractors, installers and others have reviewed applicable codes with code authorities. Reference is made to the general notes, which are a part of these plans and all contractors, installers and others utilizing these plans are advised they are responsible for examining and becoming familiar with said general notes before commencing any work hereunder. Any inconsistencies between these plans and the general notes, or between these plans, the general notes, and local building codes or ordinances must be immediately called to the attention of Gaylord Industries in writing so that any such inconsistencies can be resolved. Gaylord Industries must be notified of any changes made to the plan in a clear and conspicuous manner. Gaylord Industries will not be responsible for any incidental or consequential damages incurred by others as a result of contractors, installers and others failure to notify Gaylord of changes to the plan.

ATTENTION – This plan is the property of Gaylord Industries and is confidential and proprietary. It is not to be copied, reproduced, or distributed, in whole or part, nor be used in anyway detrimental to Gaylord Industries. If you have received this plan without Gaylord's permission, please (i) do not read it, (ii) reply to the sender that you received the drawing in error, and (iii) erase and/or destroy the drawing.

GAYLORD® INDUSTRIES

10900 S.W. AVERY ST.
TUALATIN, OR 97062

TELEPHONE: (503) 691-2010
TOLL FREE: (800) 547-9696
FAX NO.: (503) 692-6048
E-MAIL: gaylord@gaylordusa.com

Farnsworth GROUP
14225 UNIVERSITY AVENUE, SUITE 110
WALKEE, IOWA 50263
(515) 225-3469 / info@f-w.com
www.f-w.com
Engineers | Architects | Surveyors | Scientists

RIPPE ASSOCIATES
FOODSERVICE DESIGN + CONSULTING

kpff

IMEG

Bishop Engineering

ISSUE:

#	DATE:	DESCRIPTION:

BID SET

PROJECT:
STATE OF IOWA DEPARTMENT OF CORRECTIONS

CLARINDA CORRECTIONAL FACILITY - KITCHEN & LAUNDRY ADDITION

2000 N 16TH ST, CLARINDA, IA 51632

DATE:	02/09/2024
DESIGNED:	EG/TP
DRAWN:	RB
REVIEWED:	EG/RB

SHEET TITLE:

FOODSERVICE EQUIPMENT ELECTRICAL DETAILS - UDS #150

SHEET NUMBER:

FSE105

PROJECT NO.: 0240202.00
RFB922300-02

2/20/2024 12:16:53 PM

ELECTRICAL LEGEND

	DR	DUPLEX RECEPTACLE
	SR	SINGLE RECEPTACLE
	FR	FLOOR RECEPTACLE
S	SW	SWITCH
	V	VOLTS
	AMP	AMPERES
	PH	PHASE
	W	WATTS
	KW	KILOWATT
	HP	HORSEPOWER
	JB	JUNCTION BOX
		EMPTY JUNCTION BOX
	+	DISTANCE ABOVE FINISHED FLOOR
	DN+	BRING SERVICE DOWN FROM ABOVE CEILING TO A DISTANCE ABOVE FINISHED FLOOR
	COMP	COMPRESSOR
		MOTOR
		SOLENOID
		DATA OUTLET
		VOICE OUTLET
	AFF	ABOVE FINISHED FLOOR
	CLG	CEILING
	DFA	DOWN FROM ABOVE
	ET	ELECTRICAL TRADES
	ELEC	ELECTRICAL
	FSEC	FOODSERVICE EQUIPMENT CONTRACTOR

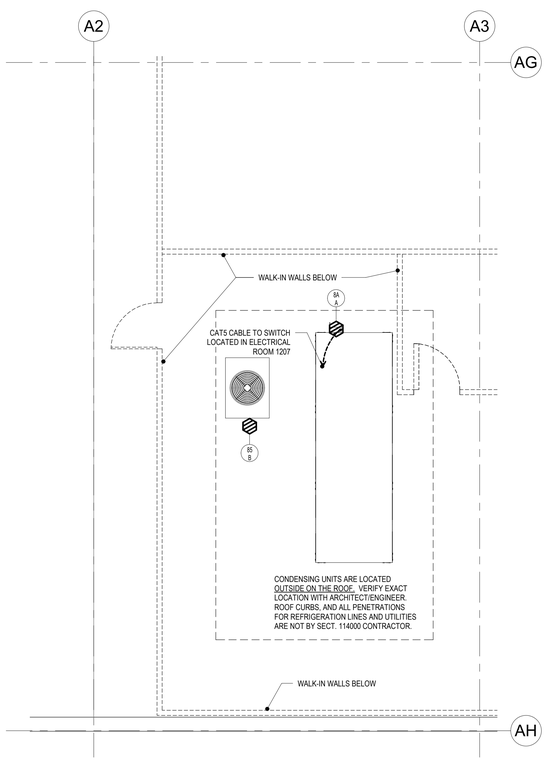

2 FOODSERVICE ELECTRICAL PLAN - ROOF
1/4" = 1'-0"

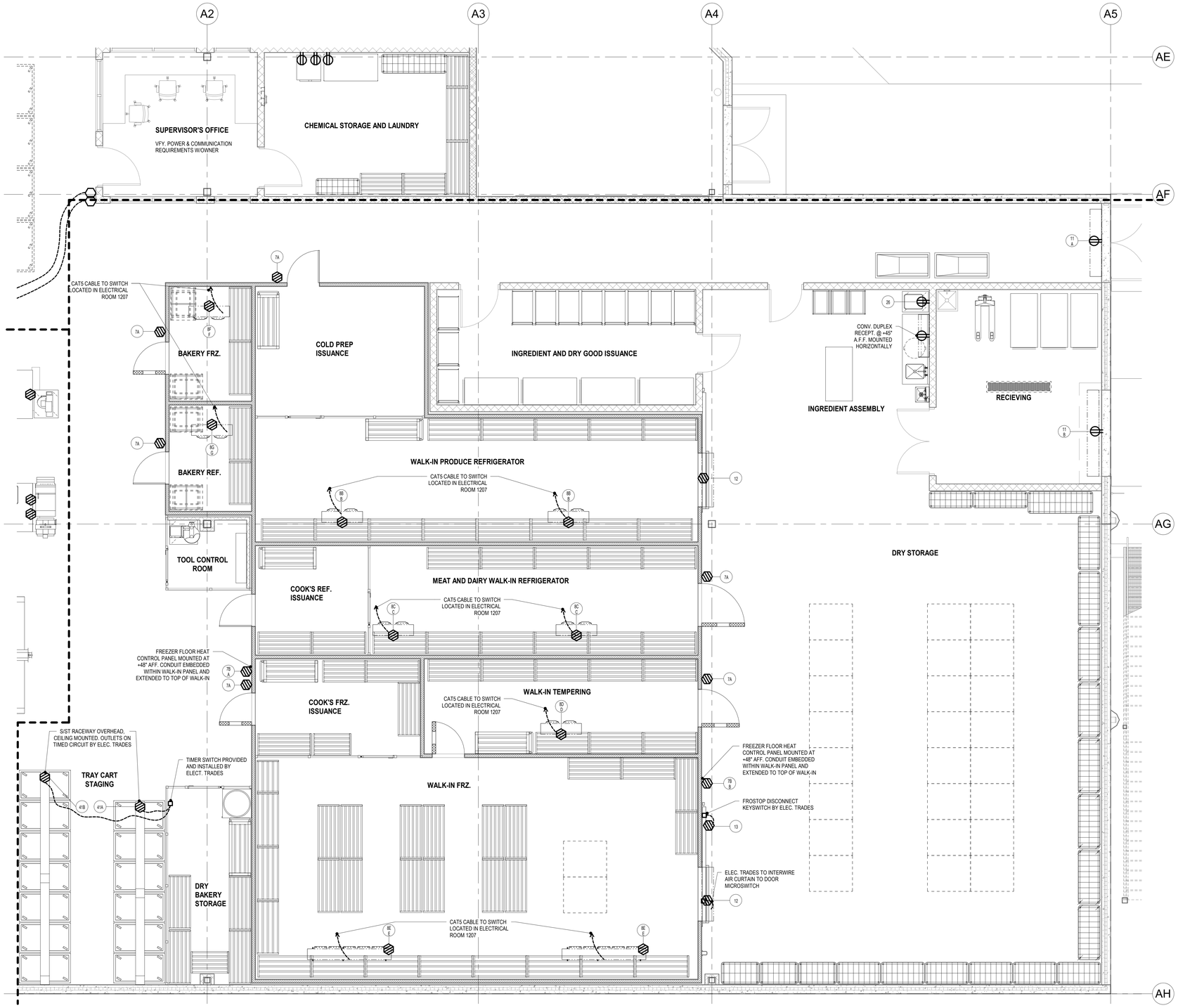

1 FOODSERVICE ELECTRICAL PLAN - AREA 1
1/4" = 1'-0"

Farnsworth GROUP
14225 UNIVERSITY AVENUE, SUITE 110
WALKEE, IOWA 50263
(515) 225-3469 / info@f-w.com
www.f-w.com
Engineers | Architects | Surveyors | Scientists
RIPPE ASSOCIATES
FOODSERVICE DESIGN + CONSULTING
kpff
IMEG
Bishop Engineering

ISSUE:

#	DATE:	DESCRIPTION:

BID SET

PROJECT:
STATE OF IOWA DEPARTMENT OF CORRECTIONS

CLARINDA CORRECTIONAL FACILITY - KITCHEN & LAUNDRY ADDITION

2000 N 16TH ST, CLARINDA, IA 51632

DATE:	02/09/2024
DESIGNED:	EG/TP
DRAWN:	MM
REVIEWED:	EG/RB

SHEET TITLE:
FOODSERVICE EQUIPMENT ELECTRICAL PLAN - AREA 1

SHEET NUMBER:
FSE106

PROJECT NO.: 0240202.00
RFB922300-02

2/20/2024 12:17:02 PM

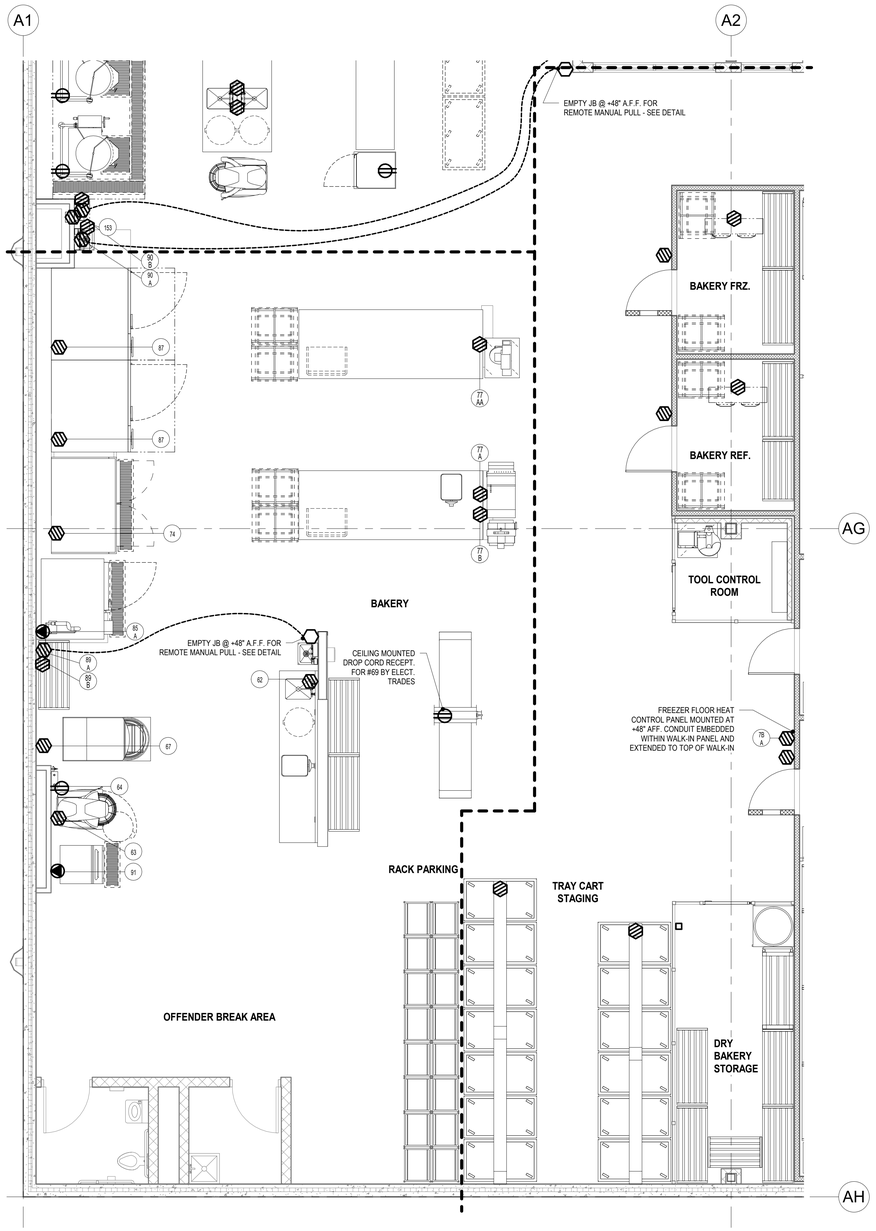

1 FOODSERVICE ELECTRICAL PLAN - AREA 2
1/4" = 1'-0"

ELECTRICAL LEGEND

	DR	DUPLEX RECEPTACLE
	SR	SINGLE RECEPTACLE
	FR	FLOOR RECEPTACLE
S	SW	SWITCH
	V	VOLTS
	AMP	AMPERES
	PH	PHASE
	W	WATTS
	KW	KILOWATT
	HP	HORSEPOWER
	JB	JUNCTION BOX
		EMPTY JUNCTION BOX
	+	DISTANCE ABOVE FINISHED FLOOR
	DN+	BRING SERVICE DOWN FROM ABOVE
		CEILING TO A DISTANCE ABOVE FINISHED FLOOR
	COMP	COMPRESSOR
		MOTOR
		SOLENOID
		DATA OUTLET
		VOICE OUTLET
	AFF	ABOVE FINISHED FLOOR
	CLG	CEILING
	DFA	DOWN FROM ABOVE
	ET	ELECTRICAL TRADES
	ELEC	ELECTRICAL
	FSEC	FOODSERVICE EQUIPMENT CONTRACTOR

Farnsworth
GROUP
14225 UNIVERSITY AVENUE, SUITE 110
WALKEE, IOWA 50263
(515) 225-3469 / info@f-w.com
www.f-w.com
Engineers | Architects | Surveyors | Scientists

RIPPE ASSOCIATES
FOODSERVICE DESIGN + CONSULTING

kpff

IMEG

Bishop Engineering

ISSUE:

#	DATE:	DESCRIPTION:

BID SET

PROJECT:
STATE OF IOWA DEPARTMENT OF CORRECTIONS

CLARINDA CORRECTIONAL FACILITY - KITCHEN & LAUNDRY ADDITION

2000 N 16TH ST, CLARINDA, IA 51632

DATE:	02/09/2024
DESIGNED:	EG/TP
DRAWN:	MM
REVIEWED:	EG/RB

SHEET TITLE:

FOODSERVICE EQUIPMENT ELECTRICAL PLAN - AREA 2

SHEET NUMBER:

FSE107

PROJECT NO.: 0240202.00
RFB922300-02

PM 2/12/2024 2:22:02

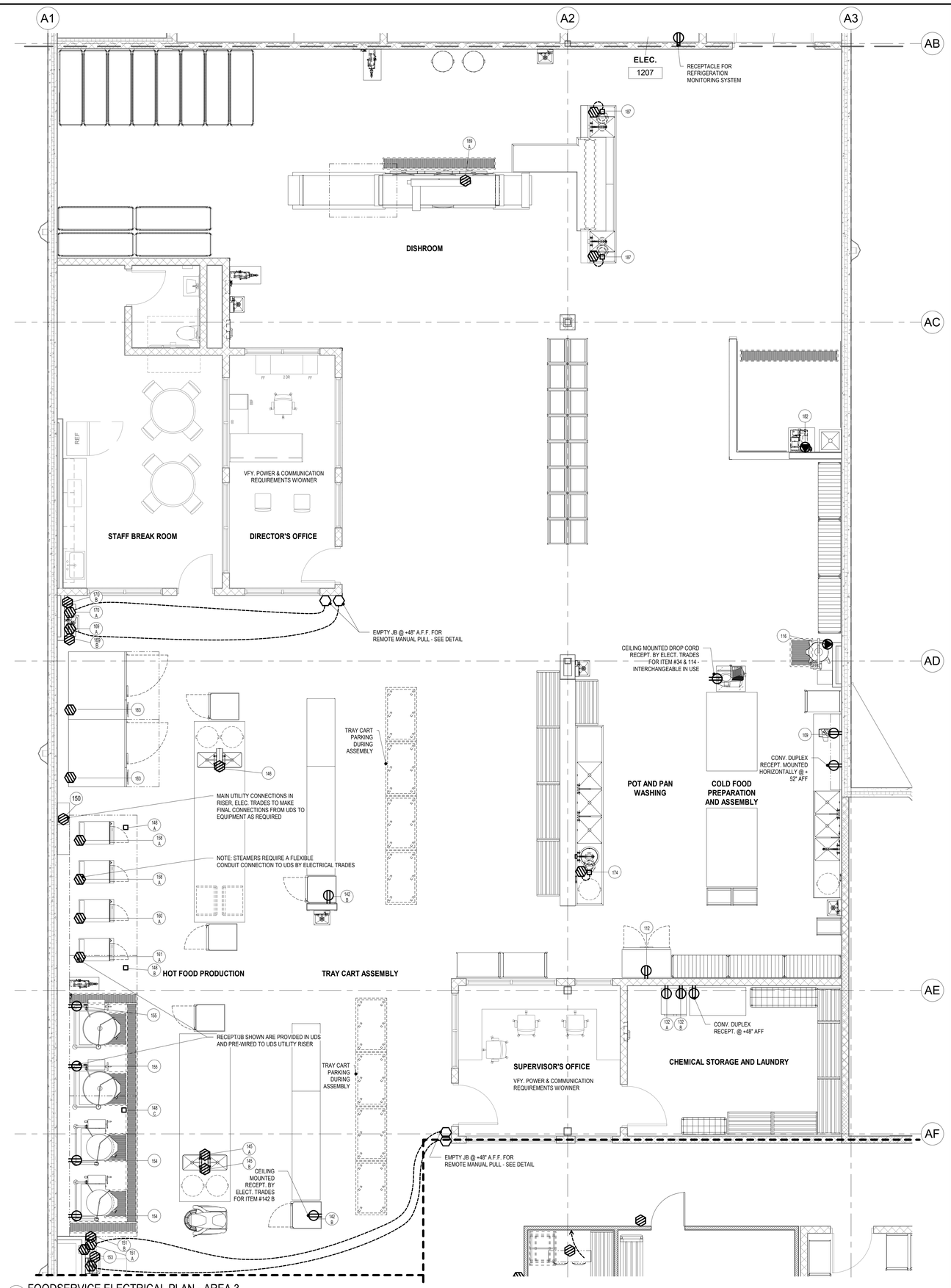

1 FOODSERVICE ELECTRICAL PLAN - AREA 3
1/4" = 1'-0"

ELECTRICAL LEGEND

	DR	DUPLEX RECEPTACLE
	SR	SINGLE RECEPTACLE
	FR	FLOOR RECEPTACLE
S	SW	SWITCH
	V	VOLTS
	AMP	AMPERES
	PH	PHASE
	W	WATTS
	KW	KILOWATT
	HP	HORSEPOWER
	JB	JUNCTION BOX
		EMPTY JUNCTION BOX
	+	DISTANCE ABOVE FINISHED FLOOR
	DN+	BRING SERVICE DOWN FROM ABOVE
		CEILING TO A DISTANCE ABOVE FINISHED FLOOR
	COMP	COMPRESSOR
		MOTOR
		SOLENOID
		DATA OUTLET
		VOICE OUTLET
	AFF	ABOVE FINISHED FLOOR
	CLG	CEILING
	DFA	DOWN FROM ABOVE
	ET	ELECTRICAL TRADES
	ELEC	ELECTRICAL
	FSEC	FOODSERVICE EQUIPMENT CONTRACTOR

Farnsworth GROUP
14225 UNIVERSITY AVENUE, SUITE 110
WALKEE, IOWA 50263
(515) 225-3469 / info@f-w.com
www.f-w.com
Engineers | Architects | Surveyors | Scientists

RIPPE ASSOCIATES
FOODSERVICE DESIGN + CONSULTING

kpff

IMEG

Bishop Engineering

ISSUE:

#	DATE:	DESCRIPTION:

BID SET

PROJECT:

STATE OF IOWA DEPARTMENT OF CORRECTIONS

CLARINDA CORRECTIONAL FACILITY - KITCHEN & LAUNDRY ADDITION

2000 N 16TH ST, CLARINDA, IA 51632

DATE:	02/09/2024
DESIGNED:	EG/TP
DRAWN:	MM
REVIEWED:	EG/RB

SHEET TITLE:

FOODSERVICE EQUIPMENT ELECTRICAL PLAN - AREA 3

SHEET NUMBER:

FSE108

PROJECT NO.: 0240202.00
RFB922300-02

PM 1/12/17 0240202.00

FOODSERVICE EQUIPMENT MECHANICAL SCHEDULE

ITEM #	DESCRIPTION		DIRECT WASTE SIZE	DIRECT WASTE HEIGHT	INDIRECT WASTE SIZE	COLD WATER SIZE	COLD WATER HEIGHT	HOT WATER SIZE	HOT WATER HEIGHT	GAS SIZE	GAS HEIGHT	GAS INPUT MBTU/HR	W.C.	REMARKS
8A	RACKED REFRIGERATION SYSTEM	A												NOTE M
8B	REFRIGERATION SYSTEM COIL - PRODUCE REFRIGERATOR	B			1"									NOTE G
8C	REFRIGERATION SYSTEM COIL - MEAT & DAIRY REFRIGERATOR	C			1"									NOTE G
8D	REFRIGERATION SYSTEM COIL - TEMPERING REFRIGERATOR	D			1"									NOTE G
8E	FREEZER SYSTEM COIL - MAIN FREEZER	E			1"									NOTE G
8F	FREEZER SYSTEM COIL - BAKERY FREEZER	F			1"									NOTE G
8G	REFRIGERATION SYSTEM COIL - BAKERY REFRIGERATOR	G			1"									NOTE G
18	HAND SINK		1 1/2"	22"		1/2"	24"	1/2"	24"					
20	FLOOR TROUGH		4"	-4"										FURNISHED BY FSEC / INSTALLED BY MECH TRADES
22	WORKCOUNTER W/SINK				2"	1/2"	22"	1/2"	22"					(1) CW & HW CONNECTION / (1) INDIRECT WASTE CONNECTION
62	WORKCOUNTER W/SINK				2"	1/2"	22"	1/2"	22"					(1) CW & HW CONNECTION / (1) INDIRECT WASTE CONNECTION
64	WATER METER W/TEMPERATURE RANGE					1/2"	72"	1/2"	72"					NOTE D / TREATED CW FROM BLDG RO SYSTEM / ADD ALTERNATE / MECHANICAL TRADES TO ROUGH IN AND CAP AS NEEDED
68	HAND SINK		1 1/2"	22"		1/2"	24"	1/2"	24"					
74	ROLL-IN PROOFER, 2 DOUBLE RACKS				3/4"	1/2"	90"							NOTE D & E / TREATED CW BLDG RO SYSTEM / ADD ALTERNATE / MECHANICAL TRADES TO ROUGH IN AND CAP AS NEEDED
75	FLOOR TROUGH		4"	-4"										FURNISHED BY FSEC / INSTALLED BY MECH TRADES
85	ROLL-IN BLAST CHILLER	A			1 1/2"									
87	RACK OVEN, 2-SEC.				3/4"	1/2"	100"			1"	90"	290	5.0"	NOTE D, E, H, I, J, V, W & X / TREATED CW BLDG RO SYSTEM / 40 PSI MIN @ 9 GPM / WATER HARDNESS 2-4 GPG / VFY UTILITIES W/OWNER
89	FIRE PROTECTION SYSTEM	A												NOTE J / SEE DETAIL / TO SERVE ITEM (1) #87
90	FIRE PROTECTION SYSTEM	A												NOTE J / SEE DETAIL / TO SERVE ITEM (1) #87
91	ICE MAKER				1/2"	3/8"	54"							NOTE D / TREATED CW FROM BLDG RO SYSTEM
92	ICE BIN				3/4"									
93	FLOOR TROUGH		4"	-4"										FURNISHED BY FSEC / INSTALLED BY MECH TRADES
100	HAND SINK		1 1/2"	22"		1/2"	24"	1/2"	24"					
104	WORKCOUNTER W/SINKS				2"	1/2"	22"	1/2"	22"					(2) CW & HW CONNECTIONS / (3) DIRECT WASTE CONNECTIONS
107	SPRAY RINSE					3/4"	20"	1/2"	20"					
117	FLOOR TROUGH		4"	-4"										FURNISHED BY FSEC / INSTALLED BY MECH TRADES
118	HOSE STATION					1/2"	48"	1/2"	48"					
132	STACKED WASHER/DRYER	A			1 1/4"	3/4"	48"	3/4"	48"	3/8"	30"	22	5.0"	NOTE I, V & W / DRAIN TO STANDPIPE IN WALL
145	WORKCOUNTER W/SINKS					1/2"	10"	1/2"	10"					(2) CW & HW CONNECTIONS / (2) INDIRECT WASTE CONNECTIONS
146	WORKCOUNTER W/SINKS				2"	1/2"	10"	1/2"	10"					(2) CW & HW CONNECTIONS / (2) INDIRECT WASTE CONNECTIONS
150	UTILITY DISTRIBUTION SYSTEM					1"	110"	1"	110"	3"	110"	1260	7.0"	DFA / NOTE S / 3/4" FILTERED CW FROM BUILDING RO SYSTEM
151	FIRE PROTECTION SYSTEM	A												NOTE J / SEE DETAIL / TO SERVE ITEM #148
154	60 GALLON KETTLE					1/2"	24"	1/2"	24"	3/4"	30"	190	4.0"	NOTE I, J, V & W
155	80 GALLON KETTLE					1/2"	24"	1/2"	24"	3/4"	30"	190	4.0"	NOTE I, J, V & W
156	FLOOR TROUGH		4"	-4"										FURNISHED BY FSEC / INSTALLED BY MECH TRADES
158	STEAMER, 2-SEC.	A			1 1/2"	3/4"	24"			3/4"	30"	125	4.0"	NOTE D, E, H, I, J, V, W & X / (1) TREATED CW CONNECTION FROM BLDG RO SYSTEM @ 35-60 PSI
158	STEAMER, 2 SEC.	B				3/4"	24"							NOTE D & X / (1) UNFILTERED CW CONNECTION @ 35-60 PSI
160	STEAMER, 2-SEC.	A			1 1/2"	3/4"	24"			3/4"	30"	125	4.0"	NOTE D, E, H, I, J, V & W / (1) TREATED CW CONNECTION FROM BLDG RO SYSTEM @ 20-60 PSI
160	STEAMER, 2 SEC.	B				3/4"	24"							NOTE D & X / (1) UNFILTERED CW CONNECTION @ 20-60 PSI
161	STEAMER, 2-SEC.	A			1 1/2"	3/4"	24"			3/4"	30"	125	4.0"	NOTE D, E, H, I, J, V & W / (1) TREATED CW CONNECTION FROM BLDG RO SYSTEM @ 35-60 PSI
161	STEAMER, 2 SEC.	B				3/4"	24"							NOTE D / (1) UNFILTERED CW CONNECTION @ 35-60 PSI
162	HOSE REEL					1/2"	44"	1/2"	44"					NOTE D / SEE DETAIL
163	RACK OVEN, 2-SEC.				3/4"	1/2"	100"			1"	102"	290	5.0"	NOTE D, E, H, I, J, V, & W / TREATED CW FROM BLDG RO SYSTEM / 40 PSI MIN @ 9 GPM / WATER HARDNESS 2-4 GPG
169	FIRE PROTECTION SYSTEM	A												NOTE J / SEE DETAIL / TO SERVE ITEM (1) #163
170	FIRE PROTECTION SYSTEM	A												NOTE J / SEE DETAIL / TO SERVE ITEM (1) #163
173	POT & PAN SINK		2"	10"		3/4"	18"	3/4"	18"					NOTE Y / (2) CW & HW CONNECTIONS / (3) DIRECT WASTE CONNECTIONS
174	DISPOSER		2"	10"										NOTE A & B / SEE DETAIL / TEE-OFF 1/2" CW FROM #175
175	SPRAY RINSE					3/4"	20"	1/2"	20"					BRANCH 1/2" CW TO ITEM #174
182	HOSE STATION					3/4"	12"							HOSE BIB W/ 2.1 GPM MIN. @ 30 PSI MIN. / 120°F INCOMING HW
183	FLOOR TROUGH		4"	-4"										FURNISHED BY FSEC / INSTALLED BY MECH TRADES
184	HOSE REEL					1/2"	44"	1/2"	44"					NOTE D / SEE DETAIL
185	EYE/FACE WASH STATION		2"	24"		1/2"	29"	1/2"	29"					MIXING VALVE FURNISHED BY FSEC / INSTALLED BY MECH TRADES
187	DISPOSER		2"	10"										NOTES A & B / SEE DETAIL / TEE-OFF 1/2" CW FROM #191
189	FLIGHT-TYPE DISHMACHINE W/DRYER	A			2"	3/4"	6"	1"	6"					NOTE F & Q
189	FLIGHT-TYPE DISHMACHINE W/DRYER	B			2"									UNLOAD END
191	SPRAY RINSE					3/4"	20"	1/2"	20"					BRANCH 1/2" CW TO ITEM #187
192	FLOOR TROUGH		4"	-4"										FURNISHED BY FSEC / INSTALLED BY MECH TRADES
194	FLOOR TROUGH		4"	-4"										FURNISHED BY FSEC / INSTALLED BY MECH TRADES

FOODSERVICE EQUIPMENT EXHAUST SCHEDULE

ITEM #	DESCRIPTION		VOLUME	VENT DEPTH	VENT WIDTH	VENT DIAMETER	STATIC PRESSURE	RI HEIGHT	FAN #	FIRE PROTECTION ITEM #	DVC ITEM #	REMARKS
87	RACK OVEN, 2-SEC.		800 CFM			8"	0.300	104"		89	N/A	NOTE X & Z / DIRECTLY VENTED
87	RACK OVEN, 2-SEC.		800 CFM			8"	0.300	104"		90	N/A	NOTE X & Z / DIRECTLY VENTED
132	STACKED WASHER/DRYER		220 CFM			4"		48"		N/A	N/A	
148	EXHAUST HOOD	L1	1422 CFM	12"	12"		1.105	116"	1	151	153	
148	EXHAUST HOOD	L1	1777 CFM	12"	15"		1.170	116"	1	151	153	
148	EXHAUST HOOD	L1	1777 CFM	12"	15"		1.170	116"	1	151	153	
148	EXHAUST HOOD	R1	1422 CFM	12"	12"		1.105	116"	1	151	153	
148	EXHAUST HOOD	R1	1777 CFM	12"	15"		1.170	116"	1	151	153	
148	EXHAUST HOOD	R1	1777 CFM	12"	15"		1.170	116"	1	151	153	
163	RACK OVEN, 2-SEC.		800 CFM			8"	0.300	104"		169	N/A	NOTE Z / DIRECTLY VENTED
163	RACK OVEN, 2-SEC.		800 CFM			8"	0.300	104"		170	N/A	NOTE Z / DIRECTLY VENTED
190	EXHAUST DUCT RISER		300 CFM	31 1/2"	4"		0.250	132"	2	N/A	N/A	CAPTURES LOAD END OF DISHMACHINE
195	CONDENSATE HOOD		2400 CFM	20"	12"		0.250	106 1/2"	2	N/A	N/A	CAPTURES UNLOAD END OF DISHMACHINE

FOODSERVICE EQUIPMENT DISHMACHINE SCHEDULE

ITEM #	DESCRIPTION	GPH	APPROX. HOUR	LATENT HEAT	SENSIBLE HEAT
189	FLIGHT-TYPE DISHMACHINE W/DRYER	58	6	85000	36400

MECHANICAL LEGEND

CW	COLD WATER
HW	HOT WATER
W	DIRECT WASTE
AGW	AIR GAP WASTE
IW	INDIRECT WASTE
FD	FLOOR DRAIN
FS	FLOOR SINK
FSH	FLOOR SINK w/HALF GRATE
TTFD	TELL-TALE FLOOR DRAIN
S	STEAM
CR	CONDENSATE RETURN
G	GAS
CWR	COOLING TOWER / CHILLED WATER SUPPLY/RETURN
	COMPRESSED AIR
	CO2
	EXHAUST
	SUPPLY
AFF	ABOVE FINISHED FLOOR
CLG	CEILING
DFA	DOWN FROM ABOVE
FSEC	FOODSERVICE EQUIPMENT CONTRACTOR
OOW	OUT OF WALL
MT	MECHANICAL TRADES
PLBG	PLUMBING
WC	WATER COLUMN

GENERAL NOTES - MECHANICAL

NOTE: GENERAL NOTES REFER TO GENERAL CONDITIONS. ALL CONDITIONS MAY NOT EXIST ON THIS PROJECT.

1. THESE DRAWINGS ARE FOR USE BY THE PROJECT ENGINEERS IN PREPARING THEIR DRAWINGS. THESE DRAWINGS ARE INCIDENTAL TO OUR SERVICES AND MUST BE REVIEWED AND APPROVED BY A PROPERLY LICENSED DESIGN PROFESSIONAL BEFORE BEING USED FOR ANY OTHER PURPOSES. RIPPE ASSOCIATES IS NOT LICENSED AS A DESIGN PROFESSIONAL AND DOES NOT HOLD ITSELF OUT AS SUCH.
2. SERVICES SHOWN ON THIS PLAN ARE EQUIPMENT REQUIREMENTS FOR FOODSERVICE EQUIPMENT ONLY. LOCATIONS, SIZES AND HEIGHTS ABOVE FINISHED FLOOR ARE APPROXIMATELY AS REQUIRED BY EQUIPMENT TO BE FURNISHED. SINCE MULTIPLE SOURCES FOR THE EQUIPMENT MAY BE SPECIFIED, SLIGHT VARIATIONS IN UTILITY LOADS AND CONNECTION SIZES CAN OCCUR. DESIGN BUILDING UTILITY SYSTEM ACCORDINGLY AND ADD NOTES TO THE MECHANICAL CONTRACT DOCUMENTS INDICATING SLIGHT VARIATIONS ARE TO BE INCLUDED IN THE MECHANICAL TRADES WORK AT NO ADDITIONAL COST.
3. THESE DRAWINGS ARE NOT TO BE USED TO ROUGH-IN UTILITIES AND/OR LOCATE SLEEVES, SINCE REQUIRED ALLOWANCES MUST BE MADE FOR MULTIPLE EQUIPMENT SOURCES AND FOR VALVES, TRAPS, FITTINGS, DISCONNECTS, ETC. WHICH WILL BE FURNISHED UNDER MECHANICAL TRADES. FSEC IS RESPONSIBLE FOR PREPARING DIMENSIONED ROUGH-IN AND SLEEVE LOCATION PLAN PER SPECIFICATIONS TO ACCOMMODATE THE EXACT EQUIPMENT BEING PROVIDED.
4. MECHANICAL TRADES TO PROVIDE ALL NECESSARY SHUT-OFF VALVES, PRESSURE REGULATORS, INDIVIDUAL EQUIPMENT SUPPLY STOPS, ETC. REQUIRED UPSTREAM OF THE FINAL SUPPLY CONNECTION(S) TO FOODSERVICE EQUIPMENT UNLESS NOTED OTHERWISE.
5. ALL INDIRECT WASTES FOR FOODSERVICE EQUIPMENT WILL BE EXTENDED TO FLOOR DRAINS BY MECHANICAL TRADES, EXCEPT FOR THE WALK-IN REFRIGERATOR/FREEZER BLOWER COIL DRAINLINES AND DRAINLINES WITHIN THE CUSTOM FABRICATED COUNTERS WHICH WILL BE EXTENDED TO FLOOR DRAINS BY THE FSEC.
6. THE FSEC IS RESPONSIBLE FOR SETTING EQUIPMENT IN PLACE. FINAL CONNECTIONS AND INTERCONNECTIONS FOR THIS EQUIPMENT ARE THE RESPONSIBILITY OF THE MECHANICAL TRADES.
7. TRADE CONTRACTORS TO PROVIDE HOLES, SLEEVES THROUGH CEILING, ROOFS, AND WALLS FOR BEVERAGE, OIL, COMPRESSED AIR, ICE, SLURRY AND REFRIGERATION LINES. SEAL THEM IN ACCORDANCE WITH LOCAL FIRE, BUILDING CODES AND IN ACCORDANCE WITH SIZES SPECIFIED. TRADE CONTRACTORS TO PROVIDE ALL DUCT FIRE SEPARATIONS, ENCLOSURES, WRAPPINGS, ETC., AS MAY BE REQUIRED BY LOCAL BUILDING AND FIRE CODES. HOLES IN FOODSERVICE EQUIPMENT FOR MECHANICAL SERVICES PROVIDED BY FSEC.
8. SINK FAUCETS FURNISHED LOOSE BY FSEC FOR INSTALLATION BY MECHANICAL TRADES. SINK ROTARY DRAIN & OVERFLOW FURNISHED AND INSTALLED BY FSEC; TAILPIECE, P-TRAP, ESCUTCHEON PLATES AND DRAIN CONNECTION FURNISHED AND INSTALLED BY MECHANICAL TRADES EXCEPT FOR TAILPIECE AND P-TRAP FOR WALL MOUNTED HANDSINKS WHICH ARE PROVIDED BY FSEC AND INSTALLED BY MECHANICAL TRADES.
9. HEALTH CODES REQUIRE THAT ALL PLUMBING BE ENCLOSED IN WALLS OR FLOOR AND THAT EXPOSED PIPING RUNS BE AS SHORT AS POSSIBLE. GAS PIPING TO BE SLEEVED AND VENTED PER CODE SO IT IS CONCEALED WITHIN THE WALL. EXPOSED HORIZONTAL PIPING MUST BE 6" ABOVE THE FLOOR AND AT LEAST 1" OFF THE WALL. ANY EXPOSED UNINSULATED STEAM PIPING/FITTINGS AND HAND SINK PIPING (BOTH DRAIN AND SUPPLY LINES) ARE TO BE CHROME PLATED.
10. SIZE EXHAUST AND SUPPLY FAN CAPACITY FOR 125% OF AIR VOLUMES INDICATED. THE CFM LISTED IN THE SCHEDULE IS THE DESIGN MINIMUM AND THE TEST & BALANCE REPORT MUST BE EQUAL TO OR GREATER THAN THE LISTED CFM.
11. ON EXHAUST HOODS SHOWN OVER COOKING EQUIPMENT, INCLUDING EQUIPMENT WITH INTEGRAL HOODS THAT ARE TYPE I HOODS, PROVIDE APPROPRIATE FIRE-RATED HOOD/DUCT ENCLOSURE ABOVE CEILING. VERIFY WITH LOCAL CODE AUTHORITIES WHETHER FIRE-RATED ENCLOSURE IS REQUIRED AT PORTION OF EXHAUST HOOD THAT EXTENDS ABOVE THE CEILING. IF ENCLOSURE IS NEEDED, ADVISE CONSULTANT AS TO FINAL ENCLOSURE DETAIL AT HOOD.
12. ALL HOSE BIBBS BY MECHANICAL TRADES TO HAVE HOT WATER AND COLD WATER MIXING VALVE.
13. ENGINEERS TO VERIFY WITH LOCAL CODE AUTHORITIES IF USE OF A GREASE INTERCEPTOR IS REQUIRED. IF REQUIRED RUN DRAINLINES THRU GREASE INTERCEPTOR AS REQUIRED BY CODE. CENTRAL GREASE TRAP TO BE LOCATED OUTSIDE OF FOODSERVICE AREA. POINT OF USE GREASE TRAP TO BE FLUSH W/FLOOR & LOCATION TO BE COORDINATED WITH FOODSERVICE CONSULTANT.
14. BENEATH ALL EXHAUST HOODS, INSTALL ALL EXPOSED PIPING AS CLOSE TO WALL AS POSSIBLE, USING 90 DEGREE ELBOWS AS NEEDED SO COOKING EQUIPMENT MAY BE PUSHED BACK FROM FRONT EDGE OF HOOD FOR PROPER CAPTURE.
15. TO MINIMIZE CROSS DRAFTS THAT WOULD AFFECT HOOD CAPTURE, EFFECTIVE INTRODUCTION OF REPLACEMNT AIR (WHETHER SUPPLIED THROUGH DISPLACEMENT VENTILATION DIFFUSERS, PERFORATED DIFFUSERS LOCATED IN THE CEILING, AND/OR TRANSFER AIR FROM ADJACENT SPACES) SHOULD BE DESIGNED TO LIMIT VELOCITIES APPROACHING THE HOOD TO LESS THAN 75 FPM.
16. FOODSERVICE EQUIPMENT WATER PRESSURE REQUIREMENTS, UNLESS NOTED OTHERWISE, IS 40-70 PSI. MECHANICAL TRADES TO PROVIDE PRV'S AS REQUIRED TO ACHIEVE PRESSURE AS NOTED.
17. RECOMMENDED HOT WATER TEMPERATURES FOR SINKS SHOULD BE AS FOLLOWS: POT & PAN SINKS SET AT 120° F MAXIMUM, HAND SINKS SET AT 110° F MAXIMUM AND ALL OTHER SINKS SET AT 110-120° F MAXIMUM. HOT WATER TEMPERATURES MUST CONFORM TO CODE REQUIREMENTS.
18. TO MAXIMIZE EXHAUST HOOD CAPTURE & PROPER AIR VOLUME BALANCING, WE DO NOT RECOMMEND HAVING MORE THAN TWO DUCT COLLARS ON ONE FAN W/OUT THE USE OF A UL LISTED BALANCING DAMPER/BAFFLE AT EACH DUCT COLLAR. THE LISTED DAMPER REQUIRES AT LEAST 8" OF ADDITIONAL VERTICAL CLEARANCE DEPENDING ON THE MANUFACTURE & APPROVAL FROM THE LOCAL AUTHORITY HAVING JURISDICTION. PLEASE ADVISE CONSULTANT IF THE DAMPER NEEDS TO BE SPECIFIED.
19. UTILITY CONNECTIONS SHOWN ARE THOSE REQUIRED TO SERVICE FOOD SERVICE EQUIPMENT ONLY. MECHANICAL TRADES SHOULD VERIFY WITH OWNER WHETHER ADDITIONAL UTILITIES ARE REQUIRED FOR EXISTING, FUTURE OR VENDOR FURNISHED NON-FOODSERVICE EQUIPMENT LOCATED WITHIN THE AREA SHOWN ON THIS PLAN.
20. FLOOR SINKS IN FOODSERVICE AREAS TO BE ACID RESISTANT, PORCELAIN ENAMEL-COATED BOWL AND SPLASH RESISTANT GRATE REMOVABLE WITHOUT TOOLS. BASKET STRAINER TO BE REMOVABLE IN OPENING LESS THAN 6" IN HEIGHT.

SCHEDULE NOTES - MECHANICAL

NOTE: SCHEDULE NOTES PERTAIN TO INDIVIDUAL ITEMS AS INDICATED IN THE MECHANICAL SPOT CONNECTION SCHEDULE.

A. MECHANICAL TRADES TO INSTALL BACKFLOW PREVENTION DEVICE SUPPLIED BY FSEC.

B. BRANCH CW FROM SPRAY RINSE OR FAUCET THRU SOLENOID VALVE AND VACUUM BREAKER, CONNECT TO DISPOSER THROAT, BOWL OR DISPOSER TROUGH AS SHOWN. SEE DETAIL.

D. MECHANICAL TRADES TO PROVIDE A CODE APPROVED BACKFLOW PREVENTION DEVICE FOR THIS ITEM.

E. THIS ITEM HAS SPECIAL WATER QUALITY REQUIREMENTS. VERIFY PARTS PER MILLION COUNT (PPM) OF TOTAL DISSOLVED SOLIDS IN THE WATER. IF IT IS 30 PPM OR HIGHER, MECHANICAL TRADES TO PROVIDE CONDITIONED WATER.

F. IF WATER EXCEEDS 3 GRAINS OF HARDNESS, THE DISHMACHINE MANUFACTURER RECOMMENDS SOFTENED WATER BE PROVIDED TO THE DISHMACHINE AND BOOSTER HEATER. SEE FOODSERVICE EQUIPMENT DISHMACHINE SCHEDULE FOR THE APPROXIMATE HOURS OF OPERATION AND AMOUNT OF WATER USED PER HOUR.

G. INDIRECT WASTE FOR THIS ITEM EXTENDED TO FLOOR DRAIN/SINK BY FSEC.

H. PROVIDE CAST IRON OR STAINLESS STEEL WASTE PIPING TO ACCOMMODATE ACCIDENTAL DISCHARGE OF EXCESSIVELY HOT WATER

I. THE FSEC WILL PROVIDE A QUICK-DISCONNECT FLEXIBLE HOSE WITH THIS PIECE OF EQUIPMENT FOR INSTALLATION BY MECHANICAL TRADES. SEE DETAIL.

J. THE FSEC WILL PROVIDE A MECHANICALLY OPERATED GAS SHUT-OFF VALVE FOR INSTALLATION BY MECHANICAL TRADES. FSEC TO INTERCONNECT TO FIRE PROTECTION SYSTEM FOR FUEL SHUT-OFF TO COOKING EQUIPMENT BENEATH EXHAUST HOODS UPON ACTIVATION OF FIRE PROTECTION SYSTEM.

M. ALL REFRIGERATION SYSTEMS ARE LOCATED APPROXIMATELY WHERE SHOWN ON THE PLAN UNLESS OTHERWISE NOTED. THE FOLLOWING ITEMS ARE NOT BY THE FSEC: ROOF CURBS/CONCRETE PADS; SLEEVED & SEALED PENETRATIONS IN ROOFS/FLOORS/CEILINGS/WALLS. VERIFY EXACT LOCATON WITH ARCHITECT/ENGINEER.

Q. SEE FOODSERVICE EQUIPMENT DISHMACHINE SCHEDULE FOR THE SENSIBLE AND LATENT HEAT DISSIPATION FROM THE DISHMACHINE. VENTILATE THE DISHROOM ACCORDINGLY. THESE VALUES ARE TO CALCULATE VENTILATION REQUIRED IN ADDITION TO EXHAUST LISTED IN SCHEDULE. THIS HEAT IS ADDITIONAL HEAT NOT EXHAUSTED THRU MACHINE VENTS.

S. WHEN A UTILITY DISTRIBUTION SYSTEM IS SPECIFIED, MECHANICAL TRADES SHALL:

1.PROVIDE AND INSTALL WATER, AND STEAM SUPPLY PIPES INSIDE SYSTEM'S VERTICAL CHASES FROM ROUGH-IN LOCATIONS TO RACEWAY PIPING CONNECTION POINTS.

2.INSTALL METAL FLEXIBLE HOSES (PROVIDE WITH UNION) AND RIGID PIPE ASSEMBLIES, ALL FURNISHED BY RACEWAY MANUFACTURER, BETWEEN APPROPRIATE EQUIPMENT AND RACEWAY.

3.PROVIDE AND INSTALL BRASS ELLS, NIPPLES, AND REDUCING FITTINGS NECESSARY TO PRESENT A NEAT APPEARANCE AND TO PREVENT FLEXIBLE HOSES FROM TOUCHING THE FLOOR.

4.INSTALL VACUUM BREAKER, AIR GAP ASSEMBLY, AND DRAINLINE FURNISHED BY SYSTEM MANUFACTURER BETWEEN EXHAUST HOOD OUTLET AND AIR GAP DRAIN AT FLOOR; FITTINGS AS REQUIRED BY PLUMBING CONTRACTOR.

5.SPECIAL NOTE – NO MODIFICATION OF ANY MANUFACTURED RACEWAY SHALL BE UNDERTAKEN BY ANY ENTITY WITHOUT THE EXPRESS, WRITTEN APPROVAL AND/OR SUPERVISION OF THE RACEWAY MANUFACTURER.

THE FSEC WILL:

1.INTERCONNECT PLUMBING AND FIELD JOINTS BY TIGHTENING UNIONS: UNIONS PRE-FITTED AND SUPPLIED BY RACEWAY MANUFACTURER. EACH FIELD JOINT WILL CONSIST OF ONE UNION FOR EACH SERVICE.

2.TEST INTERNAL PIPING SYSTEM FOR LEAKS CAUSED BY SHIPPING AND TIGHTEN AS REQUIRED.

V. MECHANICAL TRADES TO PROVIDE GAS PRESSURE REGULATORS TO REDUCE NATURAL GAS PRESSURE TO 10" W.C. (PROPANE TO 15" W.C.); GAS PRESSURE REGULATOR FURNISHED WITH EQUIPMENT WILL REDUCE PRESSURE FROM 10" W.C. (OR 15" W.C.) TO REQUIRED PRESSURE.

W. MECHANICAL TRADES TO CONCEAL MAIN GAS PIPING IN CHASE. DO NOT RUN EXPOSED ON FACE OF WALL. MINIMIZE EXPOSED PIPING FOR FINAL CONNECTIONS.

X. THIS EQUIPMENT IS EXISTING. MECHANICAL/ELECTRICAL TRADES TO DISCONNECT, FSEC TO RELOCATE AND SET IN PLACE, FINAL RE-CONNECTION BY MECHANICAL/ELECTRICAL TRADES. MECHANICAL/ELECTRICAL TRADES TO COORDINATE UTILITY REQUIREMENTS WITH EXISTING EQUIPMENT & FSEC PRIOR TO ROUGH-IN.

Y. PIPE DRAINLINE SERVING THIS EQUIPMENT IN LINE UPSTREAM FROM TELLTALE FLOOR DRAIN (I.E. FLOOR DRAIN WITHOUT BACKWATER VALVE).

Z. MECHANICAL TRADES TO FURNISH AND INSTALL DEDICATED EXHAUST FAN AND DUCTWORK TO SERVE THIS EQUIPMENT.

Farnsworth GROUP
14225 UNIVERSITY AVENUE, SUITE 110
WALKEE, IOWA 50263
(515) 225-3469 / info@f-w.com
www.f-w.com
Engineers | Architects | Surveyors | Scientists

RIPPE ASSOCIATES
FOODSERVICE DESIGN + CONSULTING

kpff

IMEG

Bishop Engineering

ISSUE:

#	DATE:	DESCRIPTION:

BID SET

PROJECT:
STATE OF IOWA DEPARTMENT OF CORRECTIONS

CLARINDA CORRECTIONAL FACILITY - KITCHEN & LAUNDRY ADDITION

2000 N 16TH ST, CLARINDA, IA 51632

DATE:	02/09/2024
DESIGNED:	EG/TP
DRAWN:	MM
REVIEWED:	EG/RB

SHEET TITLE:

FOODSERVICE EQUIPMENT MECHANICAL SCHEDULE

SHEET NUMBER:

FSM100

PROJECT NO.: 0240202.00
RFB922300-02

2/2/2024 12:17:22 PM

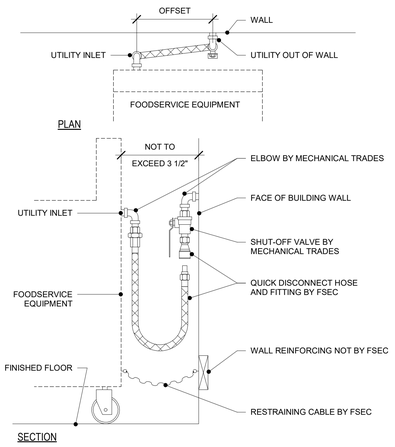

NOTE:
IF UTILITY INLET IS NOT AT HEIGHT SHOWN, MECHANICAL TRADES TO PROVIDE PIPING WITH ELBOWS TO RAISE INLET.

QUICK DISCONNECT

ROBERT RIPPE & ASSOCIATES, INC. © 2011 ROBERT RIPPE

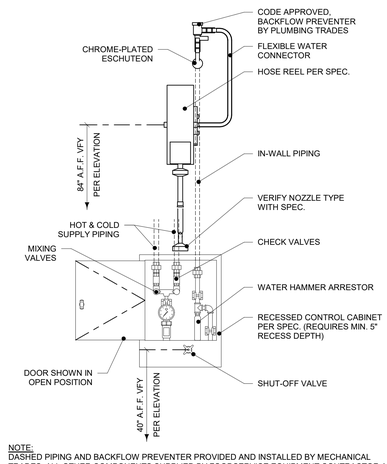

NOTE:
DASHED PIPING AND BACKFLOW PREVENTER PROVIDED AND INSTALLED BY MECHANICAL TRADES. ALL OTHER COMPONENTS SUPPLIED BY FOODSERVICE EQUIPMENT CONTRACTOR AND INSTALLED BY PLUMBING TRADES.

HOSE REEL

ROBERT RIPPE & ASSOCIATES, INC. © 2011 ROBERT RIPPE

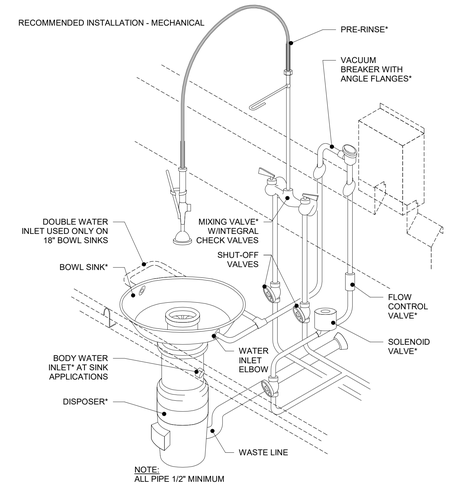

NOTE:
ALL PIPE 1/2" MINIMUM

*THESE COMPONENTS FURNISHED BY FSEC. ALL OTHER COMPONENTS AND INSTALLATION PROVIDED BY PLUMBING TRADES.

DISPOSER

ROBERT RIPPE & ASSOCIATES, INC. © 2011 ROBERT RIPPE

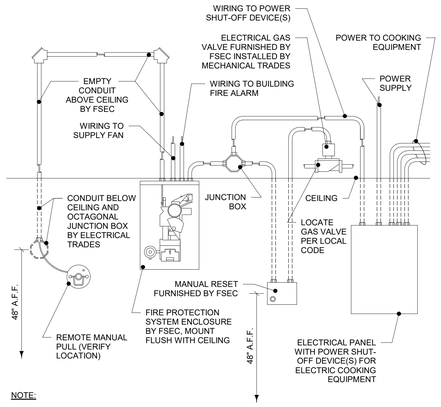

NOTE:

1. ELECTRICAL COMPONENTS AND INTERWIRING BY ELECTRICAL TRADES UNLESS NOTED OTHERWISE.
2. CONDUIT CONCEALED IN WALL WHEREVER POSSIBLE. EXPOSED CONDUIT TO BE CHROME-PLATED.

WET CHEMICAL FIRE PROTECTION SYSTEM

WIRING DIAGRAM - ELECTRIC GAS VALVE

ROBERT RIPPE & ASSOCIATES, INC. © 2011 ROBERT RIPPE

Farnsworth GROUP
14225 UNIVERSITY AVENUE, SUITE 110
WALKEE, IOWA 50263
(515) 225-3469 / info@f-w.com
www.f-w.com
Engineers | Architects | Surveyors | Scientists

RIPPE ASSOCIATES
FOODSERVICE DESIGN + CONSULTING

kpff

IMEG

Bishop Engineering

ISSUE:

#	DATE:	DESCRIPTION:

BID SET

PROJECT:
STATE OF IOWA DEPARTMENT OF CORRECTIONS

CLARINDA CORRECTIONAL FACILITY - KITCHEN & LAUNDRY ADDITION

2000 N 16TH ST, CLARINDA, IA 51632

DATE:	02/09/2024
DESIGNED:	EG/TP
DRAWN:	MM
REVIEWED:	EG/RB

SHEET TITLE:

FOODSERVICE EQUIPMENT MECHANICAL DETAILS

SHEET NUMBER:

FSM101

PROJECT NO.: 0240202.00
RFB922300-02

2/2/2024 12:17:38 PM

MECHANICAL LEGEND

	CW	COLD WATER
	HW	HOT WATER
	W	DIRECT WASTE
	AGW	AIR GAP WASTE
	IW	INDIRECT WASTE
	FD	FLOOR DRAIN
	FS	FLOOR SINK
	FSH	FLOOR SINK w/HALF GRATE
	TTFD	TELL-TALE FLOOR DRAIN
	S	STEAM
	CR	CONDENSATE RETURN
	G	GAS
	CWR	COOLING TOWER / CHILLED WATER SUPPLY/RETURN
A		COMPRESSED AIR
		CO2
		EXHAUST
		SUPPLY
	AFF	ABOVE FINISHED FLOOR
	CLG	CEILING
	DFA	DOWN FROM ABOVE
	FSEC	FOODSERVICE EQUIPMENT CONTRACTOR
	OOW	OUT OF WALL
	MT	MECHANICAL TRADES
	PLBG	PLUMBING
	WC	WATER COLUMN

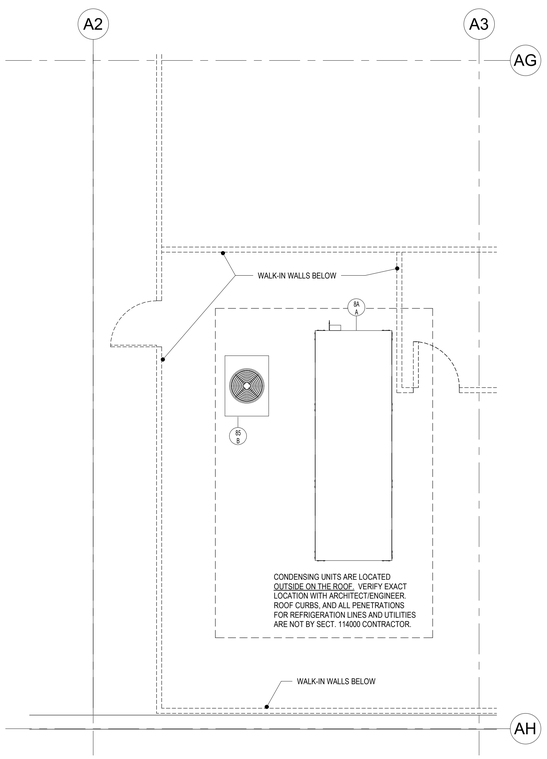

2 FOODSERVICE MECHANICAL PLAN - ROOF
1/4" = 1'-0"

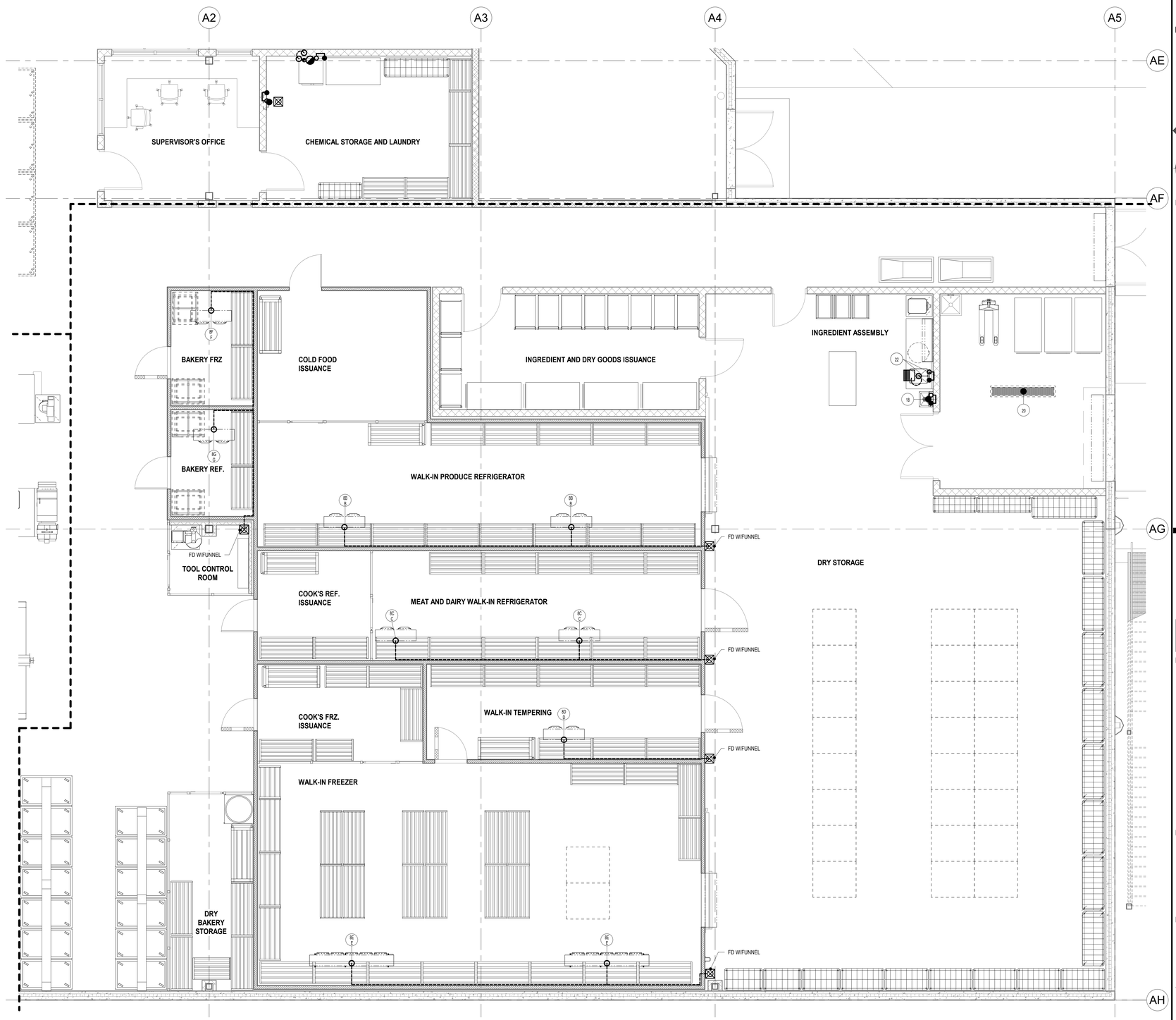

1 FOODSERVICE MECHANICAL PLAN - AREA 1
1/4" = 1'-0"

Farnsworth GROUP
14225 UNIVERSITY AVENUE, SUITE 110
WALKEE, IOWA 50263
(515) 225-3469 / info@f-w.com
www.f-w.com
Engineers | Architects | Surveyors | Scientists

RIPPE ASSOCIATES
FOODSERVICE DESIGN + CONSULTING

kpff

IMEG

Bishop Engineering

ISSUE:

#	DATE:	DESCRIPTION:

BID SET

PROJECT:
STATE OF IOWA DEPARTMENT OF CORRECTIONS

CLARINDA CORRECTIONAL FACILITY - KITCHEN & LAUNDRY ADDITION

2000 N 16TH ST, CLARINDA, IA 51632

DATE:	02/09/2024
DESIGNED:	EG/TP
DRAWN:	MM
REVIEWED:	EG/RB

SHEET TITLE:

FOODSERVICE EQUIPMENT MECHANICAL PLAN - AREA 1

SHEET NUMBER:

FSM102

PROJECT NO.: 0240202.00
RFB922300-02

2/2/2024 12:17:47 PM

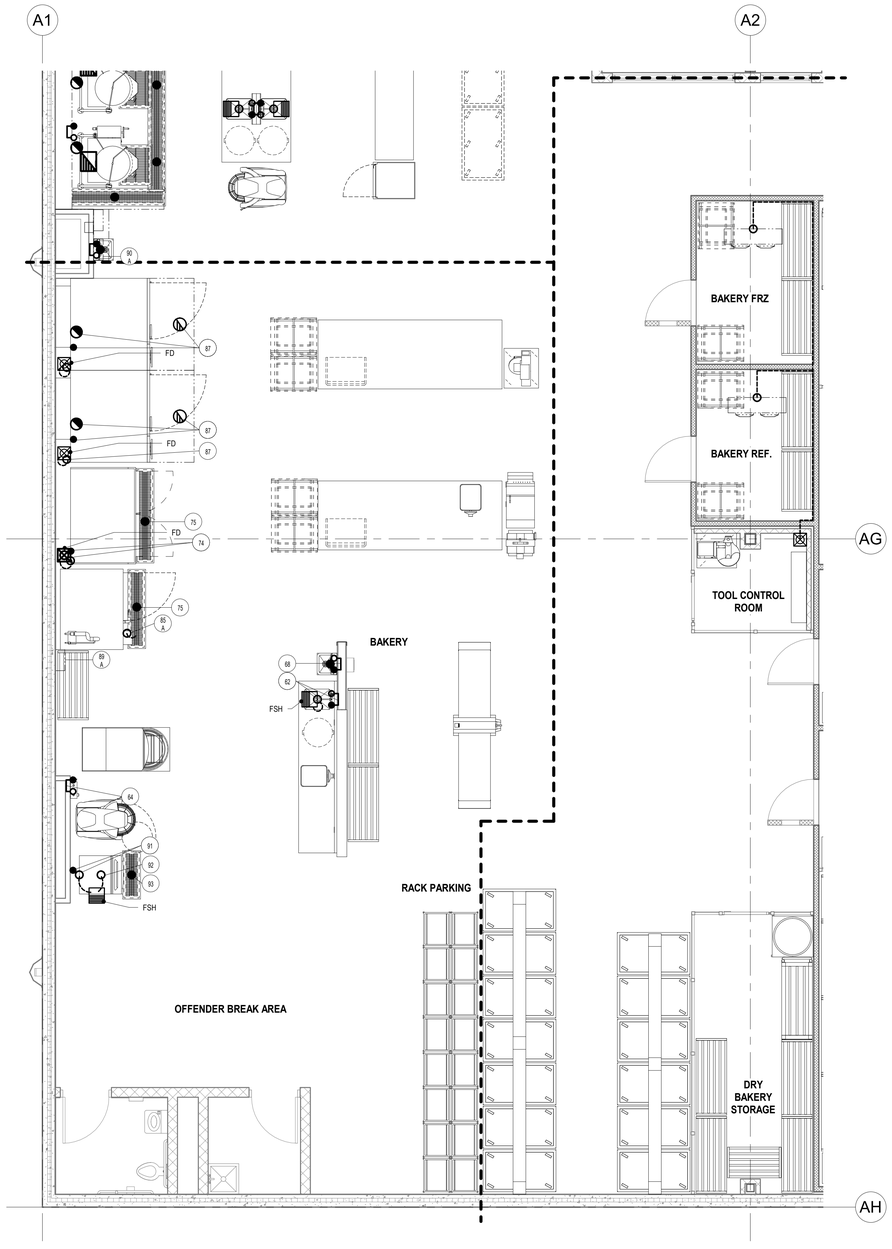

1 FOODSERVICE MECHANICAL PLAN - AREA 2
1/4" = 1'-0"

MECHANICAL LEGEND

CW	COLD WATER
HW	HOT WATER
W	DIRECT WASTE
AGW	AIR GAP WASTE
IW	INDIRECT WASTE
FD	FLOOR DRAIN
FS	FLOOR SINK
FSH	FLOOR SINK w/HALF GRATE
TTFD	TELL-TALE FLOOR DRAIN
S	STEAM
CR	CONDENSATE RETURN
G	GAS
CWR	COOLING TOWER / CHILLED WATER SUPPLY/RETURN
A	COMPRESSED AIR
	CO2
	EXHAUST
	SUPPLY
AFF	ABOVE FINISHED FLOOR
CLG	CEILING
DFA	DOWN FROM ABOVE
FSEC	FOODSERVICE EQUIPMENT CONTRACTOR
OOW	OUT OF WALL
MT	MECHANICAL TRADES
PLBG	PLUMBING
WC	WATER COLUMN

Farnsworth GROUP
14225 UNIVERSITY AVENUE, SUITE 110
WALKEE, IOWA 50263
(515) 225-3469 / info@f-w.com
www.f-w.com
Engineers | Architects | Surveyors | Scientists

RIPPE ASSOCIATES
FOODSERVICE DESIGN + CONSULTING

kpff

IMEG

Bishop Engineering

ISSUE:

#	DATE:	DESCRIPTION:

BID SET

PROJECT:
STATE OF IOWA DEPARTMENT OF CORRECTIONS

CLARINDA CORRECTIONAL FACILITY - KITCHEN & LAUNDRY ADDITION

2000 N 16TH ST, CLARINDA, IA 51632

DATE:	02/09/2024
DESIGNED:	EG/TP
DRAWN:	MM
REVIEWED:	EG/RB

SHEET TITLE:

FOODSERVICE EQUIPMENT MECHANICAL PLAN - AREA 2

SHEET NUMBER:

FSM103

PROJECT NO.: 0240202.00
RFB922300-02

2/22/2024 12:17:54 PM

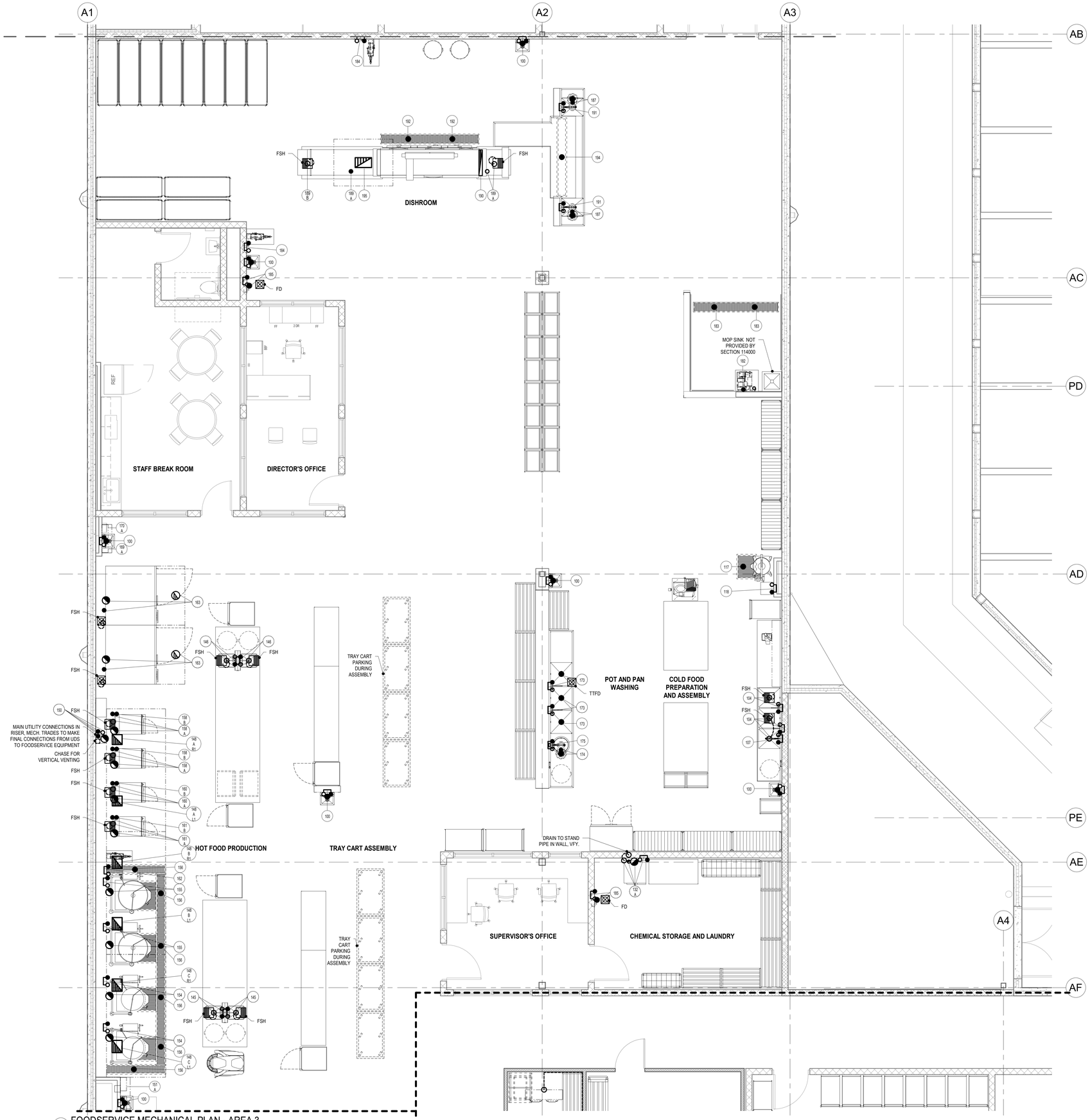

1 FOODSERVICE MECHANICAL PLAN - AREA 3
1/4" = 1'-0"

MECHANICAL LEGEND

	CW	COLD WATER
	HW	HOT WATER
	W	DIRECT WASTE
	AGW	AIR GAP WASTE
	IW	INDIRECT WASTE
	FD	FLOOR DRAIN
	FS	FLOOR SINK
	FSH	FLOOR SINK w/HALF GRATE
	TTFD	TELL-TALE FLOOR DRAIN
	S	STEAM
	CR	CONDENSATE RETURN
	G	GAS
	CWR	COOLING TOWER / CHILLED WATER SUPPLY/RETURN
A		COMPRESSED AIR
		CO2
		EXHAUST
		SUPPLY
	AFF	ABOVE FINISHED FLOOR
	CLG	CEILING
	DFA	DOWN FROM ABOVE
	FSEC	FOODSERVICE EQUIPMENT CONTRACTOR
	OOW	OUT OF WALL
	MT	MECHANICAL TRADES
	PLBG	PLUMBING
	WC	WATER COLUMN

Farnsworth GROUP
14225 UNIVERSITY AVENUE, SUITE 110
WALKEE, IOWA 50263
(515) 225-3469 / info@f-w.com
www.f-w.com
Engineers | Architects | Surveyors | Scientists

RIPPE ASSOCIATES
FOODSERVICE DESIGN + CONSULTING

kpff

IMEG

Bishop Engineering

ISSUE:

#	DATE:	DESCRIPTION:

BID SET

PROJECT:
STATE OF IOWA DEPARTMENT OF CORRECTIONS

CLARINDA CORRECTIONAL FACILITY - KITCHEN & LAUNDRY ADDITION

2000 N 16TH ST, CLARINDA, IA 51632

DATE:	02/09/2024
DESIGNED:	EG/TP
DRAWN:	MM
REVIEWED:	EG/RB

SHEET TITLE:

FOODSERVICE EQUIPMENT MECHANICAL PLAN - AREA 3

SHEET NUMBER:

FSM104

PROJECT NO.: 0240202.00
RFB922300-02

2/2/2024 12:16:08 PM

VIEW KEY

NAME — LEVEL NAME
10'-0" — HEIGHT ABOVE PROJECT 0'-0"

1 — INDICATES NOTE USED TO DESCRIBE ADDITIONAL INFORMATION ABOUT WORK REQUIRED, SPECIFIC TO THE SHEET AND/OR DETAIL

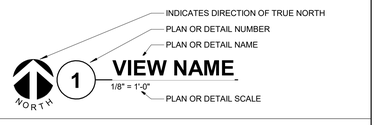

LINE TYPE AND TAG KEY:

NEW WORK BY THIS CONTRACTOR (WIDE LINE)
- NEW
- EXISTING TO BE REMOVED (SHORT DASHED PATTERN)
- NEW UNDERFLOOR OR UNDERGROUND (LONG DASHED PATTERN)

EXISTING TO REMAIN OR WORK BY OTHERS (NARROW LINE)
- EXISTING
- EXISTING TO BE REMOVED BY OTHERS (SHORT DASHED PATTERN)
- EXISTING UNDERFLOOR OR UNDERGROUND (LONG DASHED PATTERN)

HALFTONING DOES NOT MODIFY SCOPE.

'TAG'-E — TAGS WITH DASH 'E' INDICATES THE REFERENCED OBJECT IS EXISTING

TAG — UNDERLINED TAG INDICATES OBJECT IS IN-SCOPE. IF NEW, ADDITIONAL INFORMATION IS AVAILABLE IN A SCHEDULE, MATERIAL LIST, OR SYMBOL LIST

INDICATES AN EXISTING SYSTEM'S POINT OF CONNECTION/REMOVAL

— INDICATES A PLUMBING CONNECTION TO A FOOD SERVICE EQUIPMENT. REFERENCE FOOD SERVICE DRAWINGS FOR ADDITIONAL INFORMATION IN REGARDS TO TYPE OF EQUIPMENT, ROUGH-IN SIZES, AND ADDITIONAL COMMENTS.

APPLICABLE CODES

CONTRACTOR SHALL COMPLY WITH APPLICABLE CODES AND LOCAL AMENDMENTS.

BUILDING CODE:	IBC 2015 EDITION
FIRE CODE:	IFC 2015 EDITION
PLUMBING CODE:	UPC 2021 EDITION
MECHANICAL CODE:	IMC 2021 EDITION
ELECTRICAL CODE:	NFPA 70 (NEC) 2020 EDITION
LIFE SAFETY CODE:	NFPA 101 2012 EDITION
ENERGY CONSERVATION CODE:	IECC 2012
HEALTH DEPARTMENT CODE:	CURRENT EDITION
LOCAL BUILDING CODE:	CURRENT EDITION

CONTRACTOR ABBREVIATION KEY

ABBR:	DESCRIPTION:
C.C.	CIVIL CONTRACTOR
C.M.	CONSTRUCTION MANAGER
E.C.	ELECTRICAL CONTRACTOR
F.P.C.	FIRE PROTECTION CONTRACTOR
FSEC	FOOD SERVICE EQUIPMENT CONTRACTOR
M.C.	MECHANICAL CONTRACTOR
P.C.	PLUMBING CONTRACTOR
S.C.	SECURITY CONTRACTOR
T.C.	TECHNOLOGY CONTRACTOR
T.C.C.	TEMPERATURE CONTROLS CONTRACTOR

CONTACT PERSONS:

DESCRIPTION:	PERSON:
PROJECT MANAGER	MIKE MCCARTY
MECHANICAL	MIKE MCCARTY
ELECTRICAL	KRISTEN SPINA
TECHNOLOGY	MIKE MCCARTY

FIRE PROTECTION SYMBOL LIST

NOT ALL SYMBOLS MAY APPLY.

SYMBOL:	DESCRIPTION:
DFP	DRAIN
FP	FIRE PROTECTION
	PIPE CAP
	PIPE DOWN
	PIPE UP OR UP/DOWN
	UNION/FLANGE
	DIRECTION OF FLOW IN PIPE
	ROUTE TO DRAIN
	SHUTOFF VALVE NORMALLY OPEN
	AUTOMATIC DRAIN VALVE
	ANGLE VALVE
	BUTTERFLY VALVE WITH MONITOR SWITCH
	CHECK VALVE
	INSPECTOR TEST AND DRAIN VALVE
F	FLOW SWITCH
P	PRESSURE GAUGE (FURNISHED WITH BALL VALVE)
	MONITOR SWITCH
	AREA BOUNDARY
NO HATCH	LIGHT HAZARD
	ORDINARY GROUP 1
	SPRINKLER - WALL MOUNTED
	SPRINKLER
	SPRINKLER - CONCEALED

FIRE PROTECTION ABBREVIATION KEY

ABBR:	DESCRIPTION:
N.C.	NORMALLY CLOSED
NIC	NOT IN CONTRACT
N.O.	NORMALLY OPEN
TYP	TYPICAL
UON	UNLESS OTHERWISE NOTED

MECHANICAL RENOVATION NOTES:

THESE NOTES APPLY TO ALL MECHANICAL SHEETS AND TRADES, INCLUDING BUT NOT LIMITED TO, FIRE PROTECTION, PLUMBING, VENTILATION, PIPING AND TEMPERATURE CONTROL.

1. EXISTING CONDITIONS ARE SHOWN BASED ON INFORMATION OBTAINED FROM FIELD SURVEYS, EXISTING BUILDING DOCUMENTS, AND STAFF. VERIFY EXISTING CONDITIONS AND REPORT ANY CONFLICTS BEFORE PROCEEDING.
2. NOT ALL EXISTING DUCTWORK AND PIPING IS SHOWN. VERIFY EXISTING CONDITIONS BEFORE STARTING WORK. NOTIFY ENGINEER OF ANY CONFLICTS WITH NEW WORK.
3. FIELD VERIFY THE AVAILABLE CLEARANCES FOR DUCTWORK AND PIPING BEFORE FABRICATION. RISES AND DROPS MAY BE NECESSARY BECAUSE OF EXISTING FIELD CONDITIONS.
4. EACH CONTRACTOR SHALL FIELD VERIFY ACCESSIBILITY TO THE AREA OF THEIR WORK AND SHALL NOTIFY THE ARCHITECT/ENGINEER PRIOR TO BIDDING IF OTHER UTILITIES ARE REQUIRED TO BE REMOVED OR RELOCATED TO ALLOW ACCESS TO THEIR AREA OF WORK.
5. EACH CONTRACTOR SHALL CUT AND PATCH ROOFS, WALLS, AND FLOORS ASSOCIATED WITH THEIR WORK.
6. THIS CONTRACTOR IS RESPONSIBLE FOR REMOVAL AND REPLACEMENT OF CEILINGS, CEILING TILES, AND CEILING GRIDS ASSOCIATED WITH AREAS OF WORK REQUIRED BY THEIR WORK.
7. WHERE EXISTING MECHANICAL SYSTEMS ARE LOCATED IN AREAS THAT CONFLICT WITH NEW EQUIPMENT, PIPING, OR DUCTWORK TO BE INSTALLED, EACH CONTRACTOR SHALL EITHER ARRANGE NEW EQUIPMENT, PIPING, OR DUCTWORK IN SUCH A FASHION THAT IT DOES NOT CONFLICT WITH EXISTING SYSTEMS, OR REWORK EXISTING MECHANICAL SYSTEMS TO ALLOW FOR INSTALLATION OF NEW EQUIPMENT, PIPING, OR DUCTWORK.
8. PROVIDE TEMPORARY CONNECTIONS TO MAINTAIN EXISTING SYSTEMS IN SERVICE DURING CONSTRUCTION. MAINTAIN ACCESS TO EXISTING MECHANICAL INSTALLATIONS THAT REMAIN ACTIVE.
9. OBTAIN PERMISSION FROM OWNER BEFORE SHUTTING DOWN ANY SYSTEM FOR ANY REASON. MAINTAIN SERVICE TO ALL COMPONENTS THAT ARE TO REMAIN UNTIL NEW SYSTEMS ARE INSTALLED.
10. MAINTAIN EXISTING SYSTEM IN SERVICE UNTIL NEW SYSTEM IS COMPLETE AND READY FOR TIE IN AND SWITCHOVER. DRAIN SYSTEM ONLY TO MAKE SWITCHOVERS AND CONNECTIONS. OBTAIN PERMISSION FROM OWNER BEFORE PARTIALLY OR COMPLETELY DRAINING SYSTEM. MAKE CHANGEOVER TO NEW SYSTEMS WITH MINIMUM OUTAGE.
11. DISCONNECT AND REMOVE MECHANICAL DEVICES AND EQUIPMENT SERVING EQUIPMENT THAT HAS BEEN REMOVED.

FIRE PROTECTION GENERAL NOTES:

1. THE SYMBOLS AND THE MATERIAL LIST ARE FOR THE CONVENIENCE OF THE CONTRACTOR. CONTRACTOR SHALL VERIFY QUANTITIES AND FURNISH ALL MATERIALS REQUIRED FOR FULLY OPERATIONAL SYSTEMS, WHETHER SPECIFIED OR NOT.
2. CATALOG NUMBERS SHALL NOT BE CONSIDERED COMPLETE, BUT ARE GIVEN AS AN AID TO THE CONTRACTOR AND TO INDICATE THE QUALITY REQUIRED. CONTRACTOR IS RESPONSIBLE FOR COMPLETE DESCRIPTION OF MATERIAL ON THESE DRAWINGS AND IN THE SPECIFICATIONS BEFORE ORDERING. THE DESCRIPTION OF THE MATERIAL TAKES PRECEDENCE OVER THE CATALOG NUMBER. THE FIRST MANUFACTURER IS THE BASIS OF DESIGN.
3. CENTER SPRINKLERS IN CEILING TILES IN BOTH DIRECTIONS IN ALL AREAS. IN AREAS WITH 2'X4' CEILING TILES CENTERING USING A 2'X2' CEILING PATTERN IS ACCEPTABLE. SPRINKLER HEADS SHALL BE ALIGNED WITH OTHER SPRINKLER HEADS, LIGHTING, DIFFUSERS, AND ANY OTHER FEATURES IN THE CEILING.
4. NEW SPRINKLERS SHALL BE QUICK RESPONSE TYPE, UNLESS OTHERWISE NOTED. CONTRACTOR SHALL NOT MIX STANDARD RESPONSE SPRINKLERS WITH QUICK RESPONSE SPRINKLERS IN UNPARTITIONED SPACES.
5. PROVIDE COVERAGE ABOVE AND BELOW ALL DUCTWORK GREATER THAN 48" WIDE.
6. FIRE PROTECTION PIPE ROUTING IS SHOWN FOR GENERAL LAYOUT. DETERMINE EXACT NUMBER OF SPRINKLERS, PIPE SIZING, AND PIPE ROUTING.
7. ALL BUILDING AREAS SHALL BE FULLY SPRINKLERED INCLUDING CANOPIES, WALKWAYS, OVERHANGS, SOFFITS, AND BUILDING PROJECTIONS. ALL ACCESSIBLE COMBUSTIBLE CONCEALED SPACES SHALL BE FULLY PROTECTED BY THE SPRINKLER SYSTEM.
8. EACH RISER ASSEMBLY SHALL INCLUDE CHECK VALVE BUTTERFLY CONTROL VALVE INDICATING "OPEN" OR "CLOSED" POSITION, TEST INSPECTION VALVE, FLOW SWITCH AND PRESSURE GAUGES.
9. PROVIDE RISER ROOM IDENTIFICATION SIGNAGE OUTSIDE THE FIRE RISER ROOM. COORDINATE EXACT SIGN LANGUAGE WITH AHJ.
10. WHERE FEASIBLE INSTALL PIPES HIGH AS POSSIBLE TO AVOID CONFLICT WITH OTHER DISCIPLINES.
11. INSTALL SYSTEM DRAINS AT LOW POCKET AREAS CONTAINING FIVE GALLONS OF WATER OR MORE, PROVIDE WITH ISOLATION VALVE AND THREADED HOSE CONNECTION.
12. FOLLOW STRUCTURAL DETAILS WHEN PENETRATING OR PASSING THROUGH STRUCTURAL ELEMENTS. ALTERNATE DESIGNS WILL NEED TO BE APPROVED THROUGH THE STRUCTURAL ENGINEER.
13. PROVIDE INTERMEDIATE TEMPERATURE SPRINKLER HEADS WHERE REQUIRED BY NFPA 13 UNLESS OTHERWISE NOTED.
14. FINAL HEAD LOCATION, TYPE AND FINISH SHALL BE REVIEWED AND APPROVED BY THE ARCHITECT.
15. THE OWNER MUST BE NOTIFIED PRIOR TO EACH AND EVERY DRAINING OR RECHARGING OF THE SPRINKLER SYSTEM.
16. THE CONTRACTOR SHALL PREPARE A COORDINATED SET OF SHOP DRAWINGS AND SHALL OBTAIN APPROVAL FROM THE AUTHORITIES HAVING JURISDICTION AND THE LOCAL FIRE DEPARTMENT PRIOR TO ANY INSTALLATION.
17. DRAWING SHOWING LOCATIONS OF EQUIPMENT, DUCTWORK, PIPING, ETC. ARE DIAGRAMMATIC AND MAY NOT ALWAYS REFLECT EXACT INSTALLATION CONDITIONS. DRAWINGS SHOW THE GENERAL ARRANGEMENT OF DUCTWORK, PIPING, EQUIPMENT, ETC. AND MAY NOT INCLUDE ALL OFFSETS AND FITTINGS REQUIRED FOR COMPLETE INSTALLATION. THE DRAWINGS SHALL BE FOLLOWED AS CLOSELY AS ACTUAL BUILDING CONSTRUCTION AND THE WORK OF OTHERS WILL PERMIT.
18. VERIFY ALL DIMENSIONS AND CLEARANCES FROM ARCHITECTURAL, STRUCTURAL, SUBMITTALS, AND OTHER APPROPRIATE DRAWINGS OR PHYSICALLY AT SITE. REVIEW ALL DRAWINGS. INCLUDING THOSE OF OTHER TRADES.

MECHANICAL GENERAL NOTES:

THESE NOTES APPLY TO ALL MECHANICAL SHEETS AND TRADES, INCLUDING BUT NOT LIMITED TO, FIRE PROTECTION, PLUMBING, VENTILATION, PIPING AND TEMPERATURE CONTROL.

1. DRAWINGS SHOWING LOCATIONS OF EQUIPMENT, DUCTWORK, PIPING, ETC. ARE DIAGRAMMATIC AND MAY NOT ALWAYS REFLECT EXACT INSTALLATION CONDITIONS. DRAWINGS SHOW THE GENERAL ARRANGEMENT OF DUCTWORK, PIPING, EQUIPMENT, ETC., AND MAY NOT INCLUDE ALL OFFSETS AND FITTINGS REQUIRED FOR COMPLETE INSTALLATION. THE DRAWINGS SHALL BE FOLLOWED AS CLOSELY AS ACTUAL BUILDING CONSTRUCTION AND THE WORK OF OTHERS WILL PERMIT.
2. DO NOT SCALE DRAWINGS. VERIFY ALL DIMENSIONS AND CLEARANCES FROM ARCHITECTURAL, STRUCTURAL, SUBMITTALS, AND OTHER APPROPRIATE DRAWINGS OR PHYSICALLY AT SITE. REVIEW ALL DRAWINGS, INCLUDING THOSE OF OTHER TRADES.
3. COORDINATE ALL WORK WITH ALL OTHER TRADES PRIOR TO INSTALLATION TO PROVIDE CLEARANCES REQUIRED FOR OPERATION, MAINTENANCE, CODE COMPLIANCE, AND TO VERIFY NON-INTERFERENCE WITH OTHER WORK. DO NOT FABRICATE PRIOR TO VERIFICATION OF NECESSARY CLEARANCES FOR ALL TRADES. BRING ANY INTERFERENCES OR CONFLICTS TO THE ATTENTION OF THE ARCHITECT/ENGINEER BEFORE PROCEEDING WITH FABRICATION OR EQUIPMENT ORDERS.
4. REVIEW SPACE REQUIREMENTS OF EQUIPMENT SPECIFIED OR SUBSTITUTED AND MAKE REASONABLE ACCOMMODATIONS IN LAYOUT AND POSITIONING TO PROVIDE PROPER ACCESS.
5. ANY CHANGES REQUIRED TO ELIMINATE CONFLICTS OR THAT RESULT FROM A FAILURE TO COORDINATE SHALL BE MADE BY THE CONTRACTOR WITHOUT ADDITIONAL COST OR EXPENSE TO OTHERS.
6. EACH CONTRACTOR IS RESPONSIBLE FOR ALL COSTS ASSOCIATED WITH ELECTRICAL CHANGES REQUIRED FOR EQUIPMENT PROPOSED THAT DIFFERS FROM THE BASIS OF DESIGN.
7. REFER TO ARCHITECTURAL REFLECTED CEILING PLAN, ELECTRICAL, TECHNOLOGY AUDIO/VISUAL, AND OTHER MECHANICAL PLANS FOR EXACT LOCATIONS OF ALL CEILING MOUNTED DEVICES, OTHER THAN SPRINKLERS.
8. EACH CONTRACTOR IS RESPONSIBLE FOR DAMAGE CAUSED BY THEIR ACTIONS TO WALLS, FLOORS, CEILINGS, AND ROOFS. THE CONTRACTOR WHOSE WORK CAUSES DAMAGE IS RESPONSIBLE FOR PATCHING TO MATCH ORIGINAL CONSTRUCTION, FIRE RATING, AND FINISH.
9. IN AREAS WITH DRYWALL CEILINGS COORDINATE LOCATIONS OF ACCESS PANELS WITH THE DRY WALL CONTRACTOR FOR ACCESS TO VALVES, DUCTWORK ACCESSORIES, DAMPERS, ETC. COORDINATE PANEL TYPE AND COLOR WITH ARCHITECT. NOTIFY THE DRY WALL CONTRACTOR OF THE REQUIRED ACCESS PANELS PRIOR TO BIDDING.
10. SEAL ALL FLOOR, WALL, AND ROOF PENETRATIONS AIRTIGHT WHERE CONDUITS, PIPING, AND DUCTS PENETRATE. PENETRATIONS THROUGH EXTERIOR WALLS AND ROOF SHALL BE SEALED AIRTIGHT WITH WATERPROOFING MATERIALS RECOMMENDED BY MANUFACTURER FOR OUTDOOR USE.
11. CAULK ALL PIPE AND DUCT PENETRATIONS OF FULL HEIGHT NON-FIRE RATED WALL, PARTITION, FLOOR, AND ROOF ASSEMBLIES. THIS IS ESSENTIAL TO PREVENT NOISE TRANSMISSION FROM ONE ROOM TO ANOTHER AND TO PROVIDE THE DESIRED NC LEVELS WITHIN ROOMS.
12. WHERE PIPES AND DUCTS ARE SHOWN TO PENETRATE FLOORS, PROVIDE SLEEVED OPENINGS WITH THE TOP EDGE RAISED ABOVE FLOOR SURFACE IN ACCORDANCE WITH ALL RELEVANT SPEC SECTIONS. SEAL SLEEVE PERIMETER TO BE WATERTIGHT.
13. EQUIPMENT SIZES AND SERVICE CLEARANCE REQUIREMENTS VARY AMONG DIFFERENT MANUFACTURERS. CONSULT APPROVED SHOP DRAWINGS FOR EQUIPMENT SIZES AND REQUIRED SERVICE CLEARANCES. COORDINATE WITH LAYOUT OF EQUIPMENT PADS, PIPING, DUCTWORK, ETC.
14. DO NOT BLOCK TUBE PULL OR EQUIPMENT SERVICE CLEARANCES.
15. MAINTAIN A MINIMUM WORKING CLEARANCE OF 3'-6" IN FRONT OF ALL ELECTRICAL EQUIPMENT REQUIRING MAINTENANCE, INSPECTION, AND TESTING INCLUDING BUT NOT LIMITED TO PANELS, DISTRIBUTION PANELS, SWITCHBOARDS, MOTOR CONTROL CENTERS, TRANSFORMERS, EQUIPMENT DISCONNECTS AND STARTERS.
16. MAINTAIN THE DEDICATED ELECTRICAL EQUIPMENT SPACE DEFINED BY THE WIDTH / DEPTH OF ELECTRICAL EQUIPMENT MEASURED FROM THE FLOOR TO A HEIGHT 6'-0" ABOVE THE EQUIPMENT OR THE STRUCTURAL CEILING, WHICHEVER IS LOWER. SYSTEMS FOREIGN TO THE ELECTRICAL DISTRIBUTION SYSTEM ARE NOT ALLOWED IN THE DEDICATED ELECTRICAL SPACE INCLUDING: DUCTWORK, PIPING, ETC.
17. PROVIDE CONCRETE EQUIPMENT PAD FOR ALL FLOOR MOUNTED EQUIPMENT. PAD SHALL EXTEND MINIMUM 6" BEYOND ALL SIDES OF EQUIPMENT.
18. DO NOT SUPPORT EQUIPMENT, PIPING, OR DUCTWORK FROM METAL DECKING OR OTHER NON-STRUCTURAL BUILDING ELEMENTS. ANCHORS EMBEDDED IN CONCRETE SHALL BE CRACKED CONCRETE APPROVED IN ACCORDANCE WITH SPECIFICATIONS.

FIRE PROTECTION SHEET INDEX

F0.0	FIRE PROTECTION COVERSHEET
F1.1	LEVEL 01 PLAN - AREA A - FIRE PROTECTION
F1.2	LEVEL 01 PLAN - AREA B - FIRE PROTECTION
F1.3	LEVEL 02 PLAN - AREA A - FIRE PROTECTION
F1.4	LEVEL 02 PLAN - AREA B - FIRE PROTECTION
F4.1	FIRE PROTECTION DETAILS & SCHEDULES
GRAND TOTAL: 6	

IMEG 2892 10ETH STREET DES MOINES, IA 50322 P: 515.334.9908 F: 515.334.9908
www.IMEGCORP.COM

IMEG CORP. RESERVES PROPRIETARY RIGHTS, INCLUDING COPYRIGHTS, TO THIS DRAWING AND THE DATA SHOWN THEREON. SAID DRAWING AND/OR DATA ARE THE EXCLUSIVE PROPERTY OF IMEG CORP. AND SHALL NOT BE USED OR REPRODUCED FOR ANY OTHER PROJECT WITHOUT THE EXPRESS WRITTEN APPROVAL AND PARTICIPATION OF IMEG CORP. ©2024 IMEG CORP.

0 1 2 3
REF. SCALE IN INCHES — PROJECT #210070B8.00

Farnsworth GROUP
14225 UNIVERSITY AVENUE, SUITE 110
WALKEE, IOWA 50263
(515) 225-3469 / info@f-w.com
www.f-w.com
Engineers | Architects | Surveyors | Scientists

RIPPE ASSOCIATES
FOODSERVICE DESIGN + CONSULTING

kpff

IMEG

Bishop Engineering

ISSUE:

#	DATE:	DESCRIPTION:

BID SET

PROJECT:

STATE OF IOWA - DEPARTMENT OF CORRECTIONS

CLARINDA CORRECTIONAL FACILITY - KITCHEN & LAUNDRY ADDITION

2000 N 16TH ST, CLARINDA, IA 51632

DATE:	02/09/2024
DESIGNED:	MIKMCC
DRAWN:	MIKMCC
REVIEWED:	DELLLE

SHEET TITLE:

FIRE PROTECTION COVERSHEET

SHEET NUMBER:

F0.0

PROJECT NO.: 0240202.00
RFB922300-02

2/2/2024 2:59:39 PM

GENERAL NOTES:

1. REFER TO F4.1 FOR SPRINKLER USAGE SCHEDULE AND FIRE PROTECTION MATERIAL LIST.
2. REFER TO DETAILS 1/F4.1, 2/F4.2 AND 3/F4.3 FOR SPRINKLER MOUNTING DETAILS AND PIPING THROUGH FIRE RATED WALL DETAIL.
3. REFER TO F0.0 FOR GENERAL FIRE PROTECTION NOTES.

KEYNOTES: (#)

1. CORE DRILL THROUGH EXISTING PRECAST EXTERIOR WALL. CORES SHALL BE COORDINATED WITH EXISTING VERTICAL CABLING IN WALL. REFER TO EXISTING WALL SCANNING DATA FOUND ON STRUCTURAL PLANS. COORDINATE NEW WALL OPENING WITH PRECAST SUPPLIER SO CORE DRILLING IS NOT REQUIRED. ALL OPENINGS SHALL BE COORDINATED PRIOR TO ORDERING PRECAST AND COORDINATED TO ALIGN WITH NEW CORES IN EXISTING PRECAST WALL.
2. PIPING ROUTED TO EXISTING SPRINKLERS FOR FIRST FLOOR WEST SPRINKLER ZONE.
3. REMOVE EXISTING EXPOSED FIRE PROTECTION PIPE WITH INSPECTOR TEST SHUTOFF VALVE LOCATED APPROXIMATELY 4 FT AFF. EXTEND PIPING ABOVE CEILING TO EVIDENCE ROOM. REMOVE EXISTING PIPING DOWNSTREAM OF INSPECTOR TEST TO EXTERIOR DRAIN AND PATCH EXTERIOR WALL OPENING.
4. ROUTE FIRE PROTECTION DRAIN PIPE ABOVE CEILING AND DISCHARGE OUT EXTERIOR WALL. COORDINATE NEW WALL OPENING WITH PRECAST SUPPLIER SO CORE DRILLING IS NOT REQUIRED.
5. INSTALL NEW INSPECTOR TEST IN EVIDENCE ROOM AT AN ACCESSIBLE LOCATION ACCEPTABLE TO THE AHJ. INSTALL A 3/4" MANUAL DRAIN VALVE AND PIPE ROUTED TO A LOCKABLE RECESSED STAINLESS STEEL BOX LOCATED IN TOILET 1061. PROVIDE A 3/4" HOSE BIBB CONNECTION WITHIN THE RECESSED BOX TO ALLOW FOR CONNECTION OF HOSE AND ROUTING TO EXISTING FLOOR DRAIN FOR DRAINING TRAPPED WATER IN PIPING AFTER OPERATION OF THE INSPECTOR TEST. DURING FLOW OF INSPECTOR TEST, WATER SHALL DISCHARGE OUTSIDE.

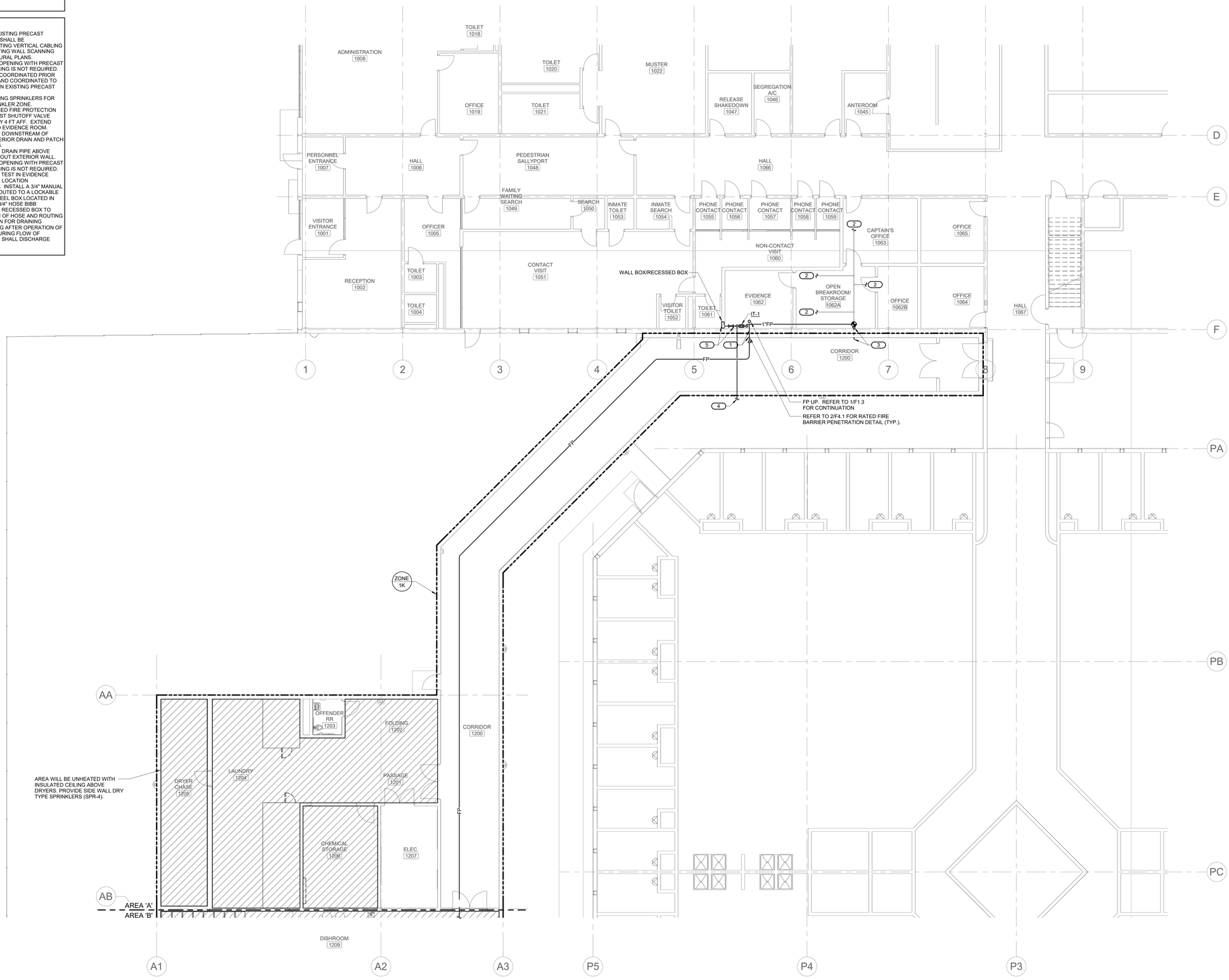

NORTH

1 LEVEL 01 PLAN - AREA A - FIRE PROTECTION

1/8" = 1'-0"

Farnsworth GROUP
14225 UNIVERSITY AVENUE, SUITE 110
WALKEE, IOWA 50263
(515) 225-3469 / info@f-w.com
www.f-w.com
Engineers | Architects | Surveyors | Scientists

RIPPE ASSOCIATES
FOODSERVICE DESIGN + CONSULTING

kpff

IMEG

Bishop Engineering

ISSUE:

#	DATE:	DESCRIPTION:

BID SET

PROJECT:

STATE OF IOWA - DEPARTMENT OF CORRECTIONS

CLARINDA CORRECTIONAL FACILITY - KITCHEN & LAUNDRY ADDITION

2000 N 16TH ST, CLARINDA, IA 51632

DATE:	02/09/2024
DESIGNED:	MIKMCC
DRAWN:	MIKMCC
REVIEWED:	DELLLE

SHEET TITLE:

LEVEL 01 PLAN - AREA A - FIRE PROTECTION

SHEET NUMBER:

F1.1

PROJECT NO.: 0240202.00

RFB922300-02

IMEG
2862 10ETH STREET
DES MOINES, IA 50322
P: 515.334.9906 F: 515.334.9908
www.imegcorp.com

IMEG CORP. RESERVES PROPRIETARY RIGHTS, INCLUDING COPYRIGHTS, TO THIS DRAWING AND THE DATA SHOWN THEREON. SAID DRAWING AND/OR DATA ARE THE EXCLUSIVE PROPERTY OF IMEG CORP. AND SHALL NOT BE USED OR REPRODUCED FOR ANY OTHER PROJECT WITHOUT THE EXPRESS WRITTEN APPROVAL AND PARTICIPATION OF IMEG CORP. ©2024 IMEG CORP.

0 1 2 3
REF. SCALE IN INCHES PROJECT #210070B.00

2/22/2024 2:59:45 PM

GENERAL NOTES:

1. REFER TO F4.1 FOR SPRINKLER USAGE SCHEDULE AND FIRE PROTECTION MATERIAL LIST.
2. REFER TO DETAILS 1/F4.1, 2/F4.2 AND 3/F4.3 FOR SPRINKLER MOUNTING DETAILS AND PIPING THROUGH FIRE RATED WALL DETAIL.
3. REFER TO F0.0 FOR GENERAL FIRE PROTECTION NOTES.

KEYNOTES: (#)

1. PROVIDE DRY TYPE SPRINKLER (SPR-4) IN COOLER OR FREEZER. F.S.C. SHALL PROVIDE PENETRATION, TRIM RING AND SEAL AROUND SPRINKLER. F.P.C. SHALL COORDINATE WITH F.S.C. ON LOCATIONS WHERE PENETRATIONS ARE REQUIRED.
2. ADD SUPPLEMENTAL DRAIN VALVE TO ALLOW DRANING TO FLOOR SINK IN ROOM 1241.

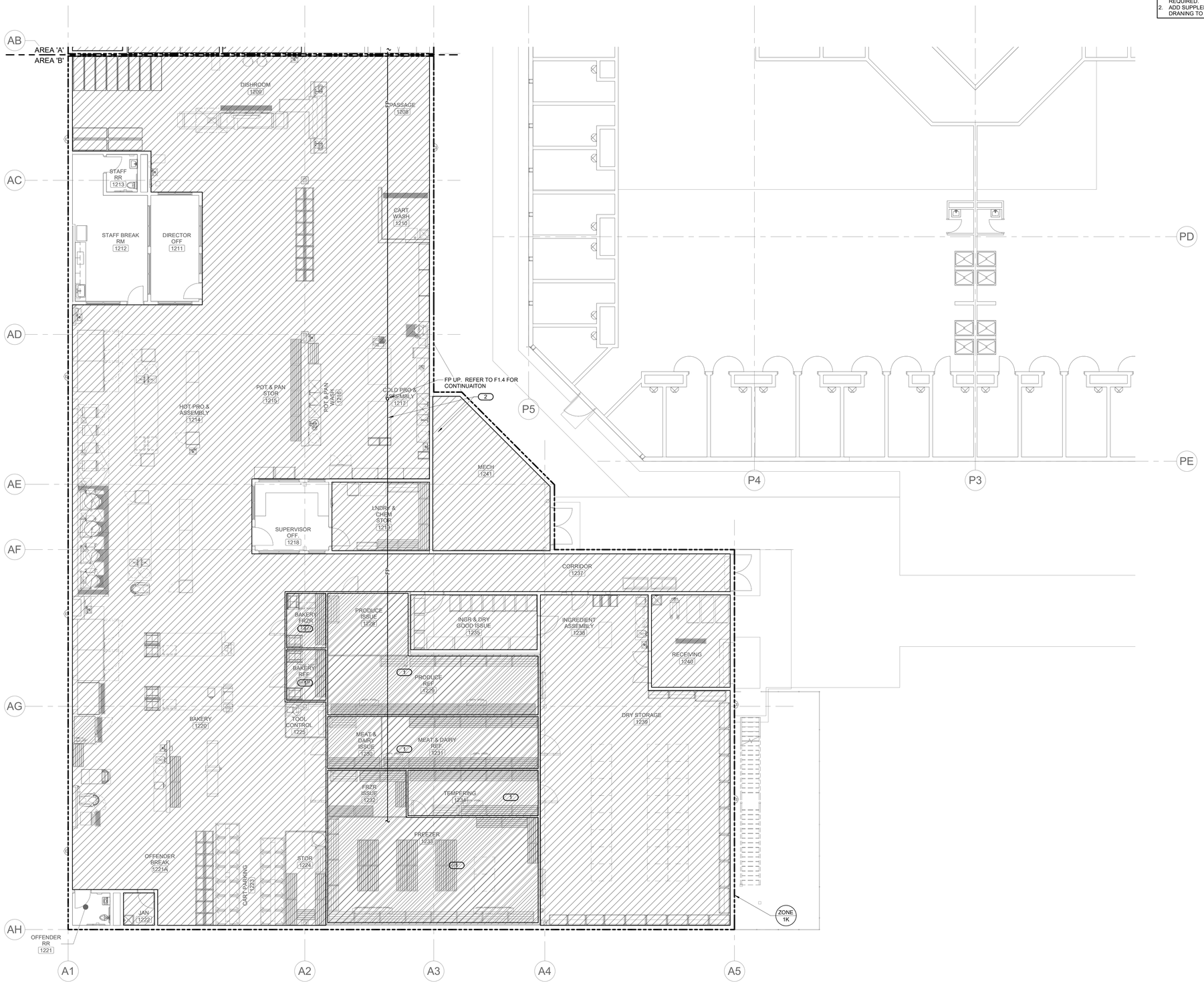

1 LEVEL 01 PLAN - AREA B - FIRE PROTECTION

1/8" = 1'-0"

NORTH

Farnsworth GROUP
14225 UNIVERSITY AVENUE, SUITE 110
WALKEE, IOWA 50263
(515) 225-3469 / info@f-w.com
www.f-w.com
Engineers | Architects | Surveyors | Scientists

RIPPE ASSOCIATES
FOODSERVICE DESIGN + CONSULTING

kpff

IMEG

Bishop Engineering

ISSUE:

#	DATE:	DESCRIPTION:

BID SET

PROJECT:

STATE OF IOWA - DEPARTMENT OF CORRECTIONS

CLARINDA CORRECTIONAL FACILITY - KITCHEN & LAUNDRY ADDITION

2000 N 16TH ST, CLARINDA, IA 51632

DATE:	02/09/2024
DESIGNED:	MIKMCC
DRAWN:	MIKMCC
REVIEWED:	DELLLE

SHEET TITLE:

LEVEL 01 PLAN - AREA B - FIRE PROTECTION

SHEET NUMBER:

F1.2

IMEG
2882 106TH STREET
DES MOINES, IA 50322
P: 515.334.9906 F: 515.334.9908
www.imegcorp.com

IMEG CORP. RESERVES PROPRIETARY RIGHTS, INCLUDING COPYRIGHTS, TO THIS DRAWING AND THE DATA SHOWN THEREON. SAID DRAWING AND/OR DATA ARE THE EXCLUSIVE PROPERTY OF IMEG CORP. AND SHALL NOT BE USED OR REPRODUCED FOR ANY OTHER PROJECT WITHOUT THE EXPRESS WRITTEN APPROVAL AND PARTICIPATION OF IMEG CORP. ©2024 IMEG CORP.

0 1 2 3
REF. SCALE IN INCHES

PROJECT #21007688.00

PROJECT NO.: 0240202.00
RFB922300-02

2/2/2024 2:58:52 PM

GENERAL NOTES:

1. REFER TO F4.1 FOR SPRINKLER USAGE SCHEDULE AND FIRE PROTECTION MATERIAL LIST.
2. REFER TO F0.0 FOR GENERAL FIRE PROTECTION NOTES.

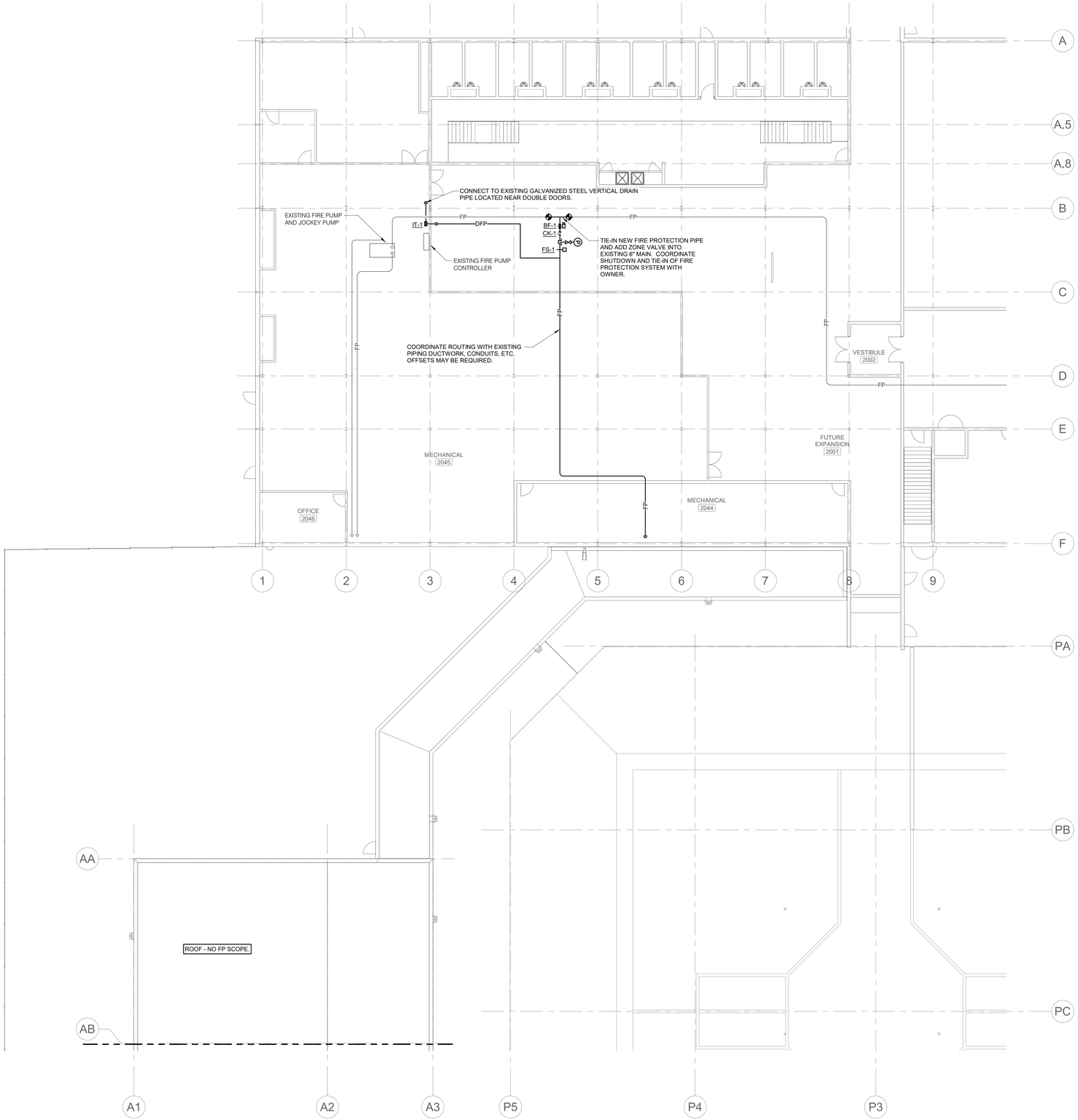

NORTH

1 **LEVEL 02 PLAN - AREA A - FIRE PROTECTION**
3/32" = 1'-0"

Farnsworth GROUP
14225 UNIVERSITY AVENUE, SUITE 110
WALKEE, IOWA 50263
(515) 225-3469 / info@f-w.com
www.f-w.com
Engineers | Architects | Surveyors | Scientists

RIPPE ASSOCIATES
FOODSERVICE DESIGN + CONSULTING

kpff

IMEG

Bishop Engineering

ISSUE:

#	DATE:	DESCRIPTION:

BID SET

PROJECT:

STATE OF IOWA - DEPARTMENT OF CORRECTIONS

CLARINDA CORRECTIONAL FACILITY - KITCHEN & LAUNDRY ADDITION

2000 N 16TH ST, CLARINDA, IA 51632

DATE:	02/09/2024
DESIGNED:	MIKMCC
DRAWN:	MIKMCC
REVIEWED:	DELLLE

SHEET TITLE:

LEVEL 02 PLAN - AREA A - FIRE PROTECTION

SHEET NUMBER:

F1.3

IMEG
2892 10ETH STREET
DES MOINES, IA 50322
P: 515.334.9906 F: 515.334.9908
www.imegcorp.com

IMEG CORP. RESERVES PROPRIETARY RIGHTS, INCLUDING COPYRIGHTS, TO THIS DRAWING AND THE DATA SHOWN THEREON. SAID DRAWING AND/OR DATA ARE THE EXCLUSIVE PROPERTY OF IMEG CORP. AND SHALL NOT BE USED OR REPRODUCED FOR ANY OTHER PROJECT WITHOUT THE EXPRESS WRITTEN APPROVAL AND PARTICIPATION OF IMEG CORP. ©2024 IMEG CORP.

0 1 2 3
REF. SCALE IN INCHES

PROJECT #21007688.00

PROJECT NO.: 0240202.00
RFB922300-02

2/2/2024 2:59:57 PM

GENERAL NOTES:

1. REFER TO F4.1 FOR SPRINKLER USAGE SCHEDULE AND FIRE PROTECTION MATERIAL LIST.
2. REFER TO F0.0 FOR GENERAL FIRE PROTECTION NOTES.

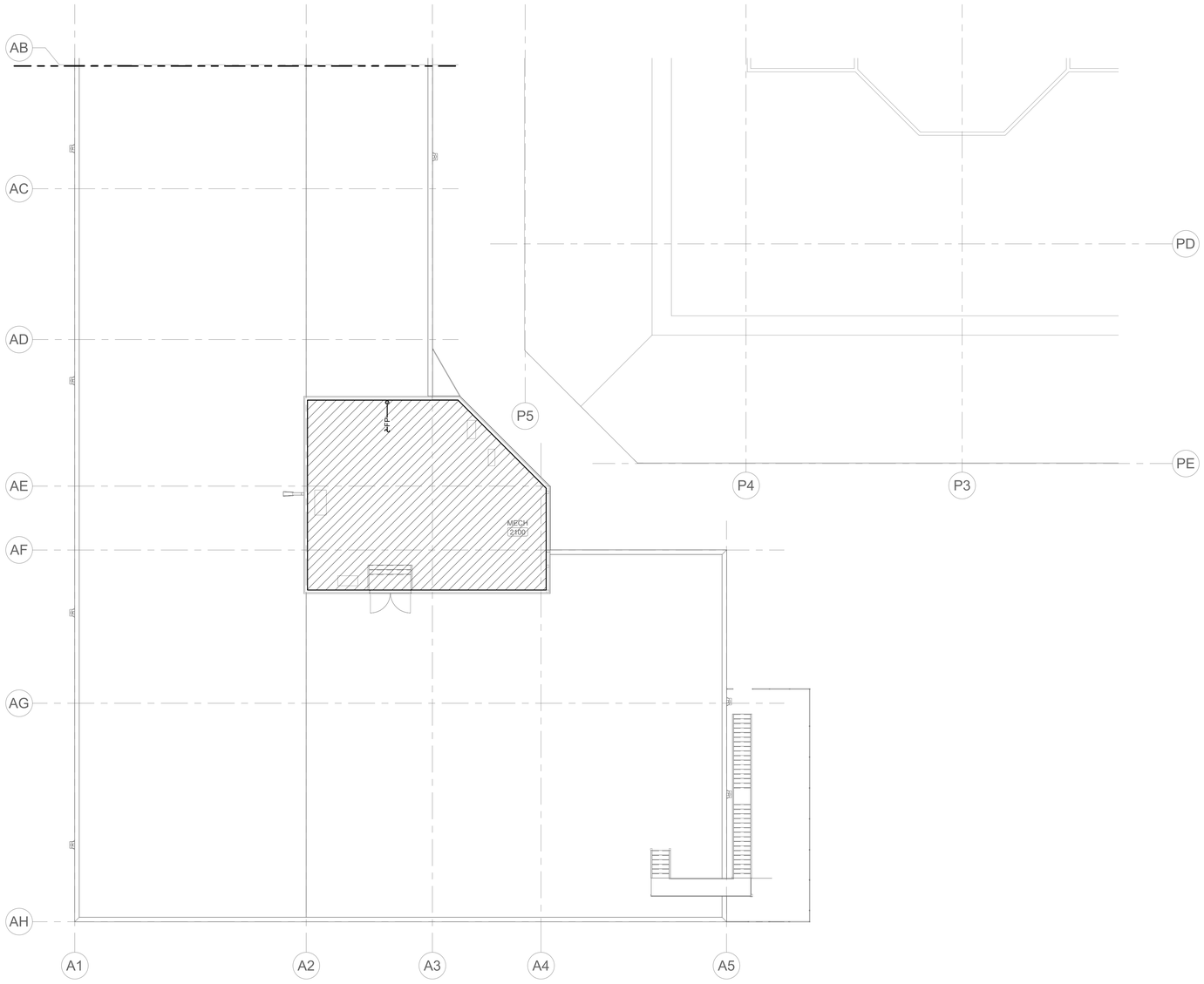

1 **LEVEL 02 PLAN - AREA B - FIRE PROTECTION**
3/32" = 1'-0"

NORTH

Farnsworth GROUP
14225 UNIVERSITY AVENUE, SUITE 110
WALKEE, IOWA 50263
(515) 225-3469 / info@f-w.com
www.f-w.com
Engineers | Architects | Surveyors | Scientists

RIPPE ASSOCIATES
FOODSERVICE DESIGN + CONSULTING

kpff

IMEG

Bishop Engineering

ISSUE:

#	DATE:	DESCRIPTION:

BID SET

PROJECT:
STATE OF IOWA - DEPARTMENT OF CORRECTIONS

CLARINDA CORRECTIONAL FACILITY - KITCHEN & LAUNDRY ADDITION

2000 N 16TH ST, CLARINDA, IA 51632

DATE:	02/09/2024
DESIGNED:	MIKMCC
DRAWN:	MIKMCC
REVIEWED:	DELLLE

SHEET TITLE:

LEVEL 02 PLAN - AREA B - FIRE PROTECTION

SHEET NUMBER:

F1.4

PROJECT NO.: 0240202.00
RFB922300-02

IMEG
2862 10ETH STREET
DES MOINES, IA 50322
P: 515.334.9906 F: 515.334.9908
www.imegcorp.com

IMEG CORP. RESERVES PROPRIETARY RIGHTS, INCLUDING COPYRIGHTS, TO THIS DRAWING AND THE DATA SHOWN THEREON. SAID DRAWING AND/OR DATA ARE THE EXCLUSIVE PROPERTY OF IMEG CORP. AND SHALL NOT BE USED OR REPRODUCED FOR ANY OTHER PROJECT WITHOUT THE EXPRESS WRITTEN APPROVAL AND PARTICIPATION OF IMEG CORP. ©2024 IMEG CORP.

0 1 2 3
REF. SCALE IN INCHES
PROJECT #210070688.00

PM 2/02/2024 9:00:00

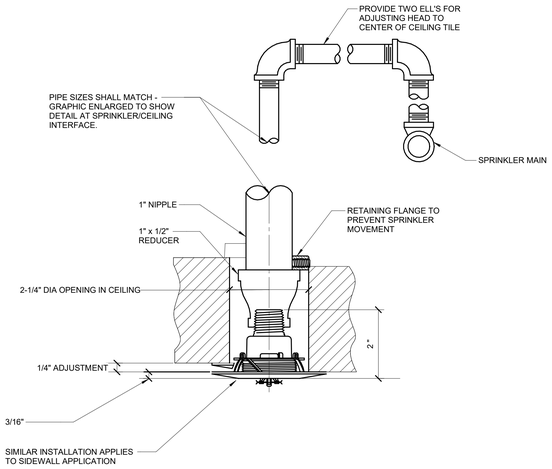

1 INSTITUTIONAL QUICK RESPONSE STANDARD COVERAGE FLUSH PENDENT SPRINKLER DETAIL

NO SCALE

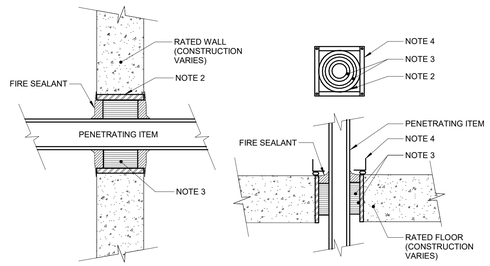

NOTES:

1. THIS GENERAL DETAIL APPLIES TO ALL ITEMS PENETRATING FIRE RATED WALLS OR FLOORS. THE INTENT IS TO MAINTAIN THE FIRE RATING AND TO ALLOW LONGITUDINAL MOVEMENT. REFER TO SPECIFICATION SECTION 07 84 00 FOR SELECTION OF THROUGH PENETRATION FIRE STOPPING.
2. SCHEDULE 5 PIPE SLEEVE EMBEDDED IN WALL OR FLOOR, OR SMOOTH CORE DRILL EACH CONTRACTOR FURNISHES SLEEVE TO DIVISION 3 OCNTRACTOR, COORDINATES SLEEVE LOCATIONS AND DEBURS SLEEVE. DIVISION 3 CONTRACTOR 3 BUILDS SLEEVE INTO WALL OR FLOOR ALLOWING NO GAP AROUND SLEEVE. IF SLEEVE IS NOT PROVIDED WHEN WALL OR FLOOR IS BUILT, CONTRACTOR SHALL INSTALL SLEEVE. SLEEVE SIZE SHALL ALLOW ANNULAR SPACE REQUIRED BY THE SELECTED FIRE STOP SYSTEM.
3. INSTALL BACKING MATERIAL, SUCH AS MINERAL WOOL SAFING, AS REQUIRED FOR FIRE STOP SYSTEM. INSTALL IN ACCORDANCE WITH FIRE STOP SYSTEM APPLICATION LISTING. SECURE TO WALL OR FLOOR TO ALLOW LONGITUDINAL MOVEMENT OF PENETRATING ITEM WITHOUT MOVEMENT OF FIRE BARRIER.
4. WATERTIGHT WELDED 1"x1" 20 GAUGE MINIMUM GALVANIZED SHEET METAL ANGLE FRAME, BY CONTRACTOR IN EQUIPMENT ROOMS FOR WATER STOP. PLACE A BEAD OF WATERPROOF SEALANT BETWEEN FLOOR AND BOTTOM OF ANGLE FRAME. SECURE TO FLOOR WITH MASONRY ANCHORS IN CORNERS AND ON 12" MAXIMUM CENTERS. MULTIPLE PENETRATING ITEMS MAY BE ENCLOSED IN ONE FRAME.

2 FLOOR/WALL PENETRATION - RATED FIRE BARRIER

NO SCALE

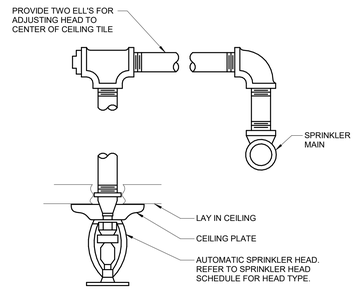

4 DRY SPRINKLER HEAD MOUNTING DETAIL

NO SCALE

FIRE SPRINKLER USAGE SCHEDULE

NOTES:
1. SEE FLOOR PLANS FOR ZONING REQUIREMENTS.
2. SPRINKLER SHALL HAVE COLOR CODED BULB THERMAL ELEMENT.
3. ALL SPRINKLERS SHALL BE UL LISTED.
4. CONTRACTOR TO VERIFY SPRINKLER REQUIREMENTS BASED ON ACTUAL INSTALLATION, USAGE, ARCHITECTURAL CEILING PLAN AND NFPA 13 REQUIREMENTS.
5. TAG NAME IS PRIMARILY FOR IDENTIFIYING SPRINKLERS IN SUBMITTALS. IT MAY OR MAY NOT BE FOUND ELSEWHERE ON THE DRAWINGS. CONTRACTOR TO SUBMIT ALL SPRINKLER TYPES TO BE USED.
6. AREAS ARE GENERAL IN NATURE. CONTRACTOR TO MATCH UNSCHEDULED AREAS TO SIMILAR SPACES.
7. SPRINKLERS SHALL HAVE A 3mm QUICK RESPONSE BULB.
8. SPRINKLERS SPECIFIED WITHIN FIRE SPRINKLER USAGE SCHEDULE ARE STANDARD COVERAGE TYPE. EXTENDED COVERAGE SPRINKLERS ARE PERMITTED PROVIDED SPRINKLERS MEET THE REQUIREMENTS OF UL.

AREA TYPE (NOTE 1 & 6)	AREA HAZARD	SPRINKLER				TEMPERATURE RATING	MANUFACTURER & MODEL	NOTES
		TAG NAME (NOTE 4 & 5)	SPRINKLER TYPE	RESPONSE CATEGORY	FINISH			
AREAS WITHOUT CEILING UNLESS NOTED OTHERWISE	SEE PLANS	SPR-1	UPRIGHT	QUICK	ROUGH BRASS	PER NFPA	VIKING VK, RELIABLE F1FR, TYCO TY-FRB, VICTAULIC V2704	NOTE 2, 3, 7, 8
AREAS WITH CEILINGS UNLESS NOTED OTHERWISE	SEE PLANS	SPR-2	INSTITUTIONAL PENDENT	QUICK	WHITE	PER NFPA	TYCO RAVEN, VIKING VK426	NOTE 2, 3, 7, 8
SIDEWALL APPLICATIONS	SEE PLANS	SPR-3	INSTITUTIONAL SIDEWALL	QUICK	WHITE	PER NFPA	TYCO RAVEN, VIKING VK427	NOTE 2, 3, 7, 8
COOLER AND FREEZER AREAS, DRYER CHASE	SEE PLANS	SPR-4	DRY CONCEALED W/ WHITE FLAT COVERPLATE	QUICK	WHITE	PER NFPA	VIKING VK, RELIABLE F3QR, VICTAULIC V3618	NOTE 2, 3, 7, 8
DRYER CHASE	SEE PLANS	SPR-5	DRY SIDEWALL	QUICK	ROUGH BRASS	PER NFPA	VIKING VK, RELIABLE F3QR, TYCO DS, VICTAULIC V3610	NOTE 2, 3, 7, 8

FIRE PROTECTION MATERIAL LIST

TAG NAME	DESCRIPTION	MANUFACTURER AND MODEL
BF-1	INDICATING BUTTERFLY VALVE, NORMALLY OPEN, 175 PSI WWP, GROOVED TYPE, DUCTILE IRON BODY WITH PROTECTIVE COATING, ELECTROLESS NICKEL OR EPDM COATED DUCTILE IRON DISC, STAINLESS STEEL STEM AND SCREWS, CAST OR DUCTILE IRON HANDWHEEL, EPDM SEAT, INDICATOR FLAG, FACTORY MOUNTED INTEGRAL MONITOR SWITCHES, UL/FM. LUGGED OR WAFER VALVES ARE ACCEPTABLE PROVIDED THEY HAVE THE FEATURES LISTED ABOVE.	NIBCO GD-4765-8N, VICTAULIC SERIES 705, TYCO BFV-300, KENNEDY G300, GLOBE GLR300G, REL-BFG-300
CK-1	SWING CHECK VALVE, 300 PSI WWP, GROOVED/FLANGED TYPE, DUCTILE IRON BODY, STAINLESS STEEL HINGE ASSOCIATED WITH RUBBER FACED CLAPPER, BRASS SEAT RING, ACCESS COVER, 1/2" OR 3/4" TAPPED BOSSES, VALVE LISTED FOR HORIZONTAL OR VERTICAL INSTALLATION, UL/FM. FLANGED TYPE IS ACCEPTABLE PROVIDED VALVE HAS THE FEATURES LISTED ABOVE.	VIKING G-1, TYCO CV-1F
FS-1	FLOW SWITCH - VANE TYPE, 450 PSI, FLOW SENSITIVITY OF 4-10 GPM, TWO SINGLE POLE DOUBLE THROW SWITCHES, PNEUMATIC RETARD ADJUSTABLE FROM 0-90 SECONDS WITH AUTOMATIC RESET, NEMA 4 INDOOR/OUTDOOR RATED METAL HOUSING, UL/FM.	POTTER VSR, SYSTEM SENSOR WFD
IT-1	COMBINATION INSPECTOR'S TEST AND DRAIN VALVE, 300 PSI, INTEGRAL SIGHT GLASS, BALL VALVE PLATE INDICATING OFF-TEST-DRAIN POSITIONS, FURNISHED WITH TEST ORIFICE GIVING FLOW EQUIVALENT TO ONE SPRINKLER OF A TYPE HAVING THE SMALLEST ORIFICE INSTALLED ON THE SYSTEM, PRESSURE RELIEF VALVE, UL/FM.	AGF M1011A, RELIABLE MODEL TD, VICTAULIC TESTMASTER, GLOBE UTD W/ MODEL ARV PRV

IMEG
2892 10ETH STREET
DES MOINES, IA 50322
P: 515.334.9906 F: 515.334.9908
www.imegcorp.com

IMEG CORP. RESERVES PROPRIETARY RIGHTS, INCLUDING COPYRIGHTS, TO THIS DRAWING AND THE DATA SHOWN THEREON. SAID DRAWING AND/OR DATA ARE THE EXCLUSIVE PROPERTY OF IMEG CORP. AND SHALL NOT BE USED OR REPRODUCED FOR ANY OTHER PROJECT WITHOUT THE EXPRESS WRITTEN APPROVAL AND PARTICIPATION OF IMEG CORP. ©2024 IMEG CORP.

0 1 2 3
REF. SCALE IN INCHES
PROJECT #21007688.00

Farnsworth GROUP
14225 UNIVERSITY AVENUE, SUITE 110
WALKEE, IOWA 50263
(515) 225-3469 / info@f-w.com
www.f-w.com
Engineers | Architects | Surveyors | Scientists

RIPPE ASSOCIATES
FOODSERVICE DESIGN + CONSULTING

kpff

IMEG

Bishop Engineering

ISSUE:

#	DATE:	DESCRIPTION:

BID SET

PROJECT:

STATE OF IOWA - DEPARTMENT OF CORRECTIONS

CLARINDA CORRECTIONAL FACILITY - KITCHEN & LAUNDRY ADDITION

2000 N 16TH ST, CLARINDA, IA 51632

DATE:	02/09/2024
DESIGNED:	MIKMCC
DRAWN:	MIKMCC
REVIEWED:	DELLLE

SHEET TITLE:

FIRE PROTECTION DETAILS & SCHEDULES

SHEET NUMBER:

F4.1

PROJECT NO.: 0240202.00
RFB922300-02

2/2/2024 5:00:05 PM

VIEW KEY

NAME — LEVEL NAME
10'-0" — HEIGHT ABOVE PROJECT 0'-0"

1 — INDICATES NOTE USED TO DESCRIBE ADDITIONAL INFORMATION ABOUT WORK REQUIRED, SPECIFIC TO THE SHEET AND/OR DETAIL

INDICATES DIRECTION OF TRUE NORTH
PLAN OR DETAIL NUMBER
PLAN OR DETAIL NAME
PLAN OR DETAIL SCALE

NORTH — 1 — VIEW NAME — 1/8" = 1'-0"

INDICATES SIMILAR DETAIL REFERENCED IN MULTIPLE LOCATIONS
DETAIL REFERRED TO BY SECTION CUT
SHEET DETAIL IS LOCATED ON

SIM — 1 — M101 — SIM — 4 2 3 — T101

LINE TYPE AND TAG KEY:

NEW WORK BY THIS CONTRACTOR (WIDE LINE)
NEW
EXISTING TO BE REMOVED (SHORT DASHED PATTERN)
NEW UNDERFLOOR OR UNDERGROUND (LONG DASHED PATTERN)

EXISTING TO REMAIN OR WORK BY OTHERS (NARROW LINE)
EXISTING
EXISTING TO BE REMOVED BY OTHERS (SHORT DASHED PATTERN)
EXISTING UNDERFLOOR OR UNDERGROUND (LONG DASHED PATTERN)

HALFTONING DOES NOT MODIFY SCOPE.

'TAG'-E — TAGS WITH DASH 'E' INDICATES THE REFERENCED OBJECT IS EXISTING

TAG — UNDERLINED TAG INDICATES OBJECT IS IN-SCOPE. IF NEW, ADDITIONAL INFORMATION IS AVAILABLE IN A SCHEDULE, MATERIAL LIST, OR SYMBOL LIST

INDICATES AN EXISTING SYSTEM'S POINT OF CONNECTION/REMOVAL

— INDICATES A PLUMBING CONNECTION TO A FOOD SERVICE EQUIPMENT. REFERENCE FOOD SERVICE DRAWINGS FOR ADDITIONAL INFORMATION IN REGARDS TO TYPE OF EQUIPMENT, ROUGH-IN SIZES, AND ADDITIONAL COMMENTS.

APPLICABLE CODES

CONTRACTOR SHALL COMPLY WITH APPLICABLE CODES AND LOCAL AMENDMENTS.

BUILDING CODE:	IBC 2015 EDITION
FIRE CODE:	IFC 2015 EDITION
PLUMBING CODE:	UPC 2021 EDITION
MECHANICAL CODE:	IMC 2021 EDITION
ELECTRICAL CODE:	NFPA 70 (NEC) 2020 EDITION
LIFE SAFETY CODE:	NFPA 101 2012 EDITION
ENERGY CONSERVATION CODE:	IECC 2012
HEALTH DEPARTMENT CODE:	CURRENT EDITION
LOCAL BUILDING CODE:	CURRENT EDITION

CONTRACTOR ABBREVIATION KEY

ABBR:	DESCRIPTION:
C.C.	CIVIL CONTRACTOR
C.M.	CONSTRUCTION MANAGER
E.C.	ELECTRICAL CONTRACTOR
F.P.C.	FIRE PROTECTION CONTRACTOR
FSEC	FOOD SERVICE EQUIPMENT CONTRACTOR
M.C.	MECHANICAL CONTRACTOR
P.C.	PLUMBING CONTRACTOR
S.C.	SECURITY CONTRACTOR
T.C.	TECHNOLOGY CONTRACTOR
T.C.C.	TEMPERATURE CONTROLS CONTRACTOR

CONTACT PERSONS:

DESCRIPTION:	PERSON:
PROJECT MANAGER	MIKE MCCARTY
MECHANICAL	MIKE MCCARTY
ELECTRICAL	KRISTEN SPINA
TECHNOLOGY	MIKE MCCARTY

PLUMBING SYMBOL LIST

NOT ALL SYMBOLS MAY APPLY.

SYMBOL:	DESCRIPTION:
AV	ACID VENT
AW	ACID WASTE
CA	COMPRESSED AIR
CW	COLD WATER - POTABLE
D	DRAIN
DI	DEIONIZED WATER
DT	DRAIN TILE
FOR	FUEL OIL RETURN
FOS	FUEL OIL SUPPLY
G	NATURAL GAS
GRV	GAS REGULATOR VENT
GSAN	SANITARY DRAINAGE (GREASE SANITARY DRAINAGE)
GV	GREASE VENT
HW	HOT WATER - POTABLE
HWC	HOT WATER CIRCULATING - POTABLE
HW140	HOT WATER - POTABLE NUMBER INDICATES TEMP
HWC140	HOT WATER CIRC. - POTABLE NUMBER INDICATES TEMP
IA	INSTRUMENT AIR
MA	MEDICAL AIR
MPG	MEDIUM PRESSURE GAS
MV	MEDICAL VACUUM
N	NITROGEN
NCW	NON-POTABLE COLD WATER
NHW	NON-POTABLE HOT WATER
NO	NITROUS OXIDE
O	OXYGEN
P	PROPANE GAS
PD	PUMPED DISCHARGE
PW	PURE WATER
RO	REVERSE OSMOSIS WATER
SAN	SANITARY DRAINAGE
SCW	SOFT COLD WATER
SHW	SOFT HOT WATER
ST(1,000)	STORM DRAINAGE (ROOF SQUARE FOOTAGE)
STS	STORM DRAINAGE (SECONDARY)
STW	SOFT TEMPERED WATER
TW	TEMPERED WATER
V	VENT
VAC	LAB VACUUM
W	SERVICE WATER - POTABLE
WAGD	WASTE ANETHESIA GAS DISPOSAL
	PIPE CONTINUATION
	PIPE CAP
	PIPE DOWN
	PIPE UP OR UP/DOWN
FD	PIPE SERVING FIXTURE ON FLOOR ABOVE (EXAMPLE: FD = FLOOR DRAIN)
	PITCH PIPE IN DIRECTION
	DIRECTION OF FLOW IN PIPE
	ROUTE TO DRAIN
RD-1 6"(1000)	ROOF DRAIN PROPERTIES — SYMBOL / SIZE (ROOF SQ. FT.)
	DIELECTRIC CONNECTION
	UNION/FLANGE
	SHUTOFF VALVE NORMALLY OPEN
	SHUTOFF VALVE NORMALLY CLOSED
GPM	BALANCING VALVE (NUMBER INDICATES GPM)
	CHECK VALVE
	BACKFLOW PREVENTER
	SOLENOID VALVE
	SAFETY/RELIEF VALVE
	VACUUM BREAKER
P	PRESSURE GAUGE (FURNISHED WITH BALL VALVE)
P	PRESSURE SENSOR (FURNISHED WITH BALL VALVE)
T	TEMPERATURE SENSOR WITH WELL
T	THERMOMETER WITH WELL (DIAL TYPE)
	THERMOMETER WITH WELL (FILLED TYPE)
	REDUCER - REFERENCE SPECIFICATION FOR CONCENTRIC/ECCENTRIC AND FOT/FOB
	PRESSURE REDUCING VALVE (LIQUID/GAS)
	PUMP
M	METER
	ALIGNMENT GUIDE
	PIPE ANCHOR
EJ# (#.#")	EXPANSION JOINT #.#" IS THE EXPANSION TRAVEL INCHES
	AIR ADMITTANCE VALVE

PLUMBING ABBREVIATION KEY

ABBR:	DESCRIPTION:
AD	ACCESS DOOR
AFF	ABOVE FINISHED FLOOR
BFP	BACKFLOW PREVENTER
BT	BATHTUB
CB	CATCH BASIN
CI	CAST IRON
CO	CLEANOUT
CS	CLINICAL SINK
DB	DIALYSIS BOX
DF	DRINKING FOUNTAIN
DI	DUCTILE IRON
E	EXISTING
EE	EMERGENCY EYEWASH
ES	EMERGENCY SHOWER
ESE	EMERGENCY SHOWER/EYEWASH
EWC	ELECTRIC WATER COOLER
FCO	FLOOR CLEANOUT
FD	FLOOR DRAIN
FM	FLOW METER
FS	FLOOR SINK
FSP	FOOD SERVICE PLANS
GD	GARBAGE DISPOSER
GI	GREASE INTERCEPTOR
HB	HOSE BIBB
I.E.	INVERT ELEVATION (FOR REFERENCE ONLY)
IW	INDIRECT WASTE
LAV	LAVATORY
MB	MOP BASIN
MH	MANHOLE
MV	MIXING VALVE
NIC	NOT IN CONTRACT
NT	NEUTRALIZATION TANK
OS	OIL SEPARATOR
RD	ROOF DRAIN
SCCR	SHORT CIRCUIT CURRENT RATING
SH	SHOWER
SK	SINK
SS	SERVICE SINK
TD	TRENCH DRAIN
TP	TRAP PRIMER
TYP	TYPICAL
UR	URINAL
VTR	VENT THROUGH ROOF
WC	WATER CLOSET
WCO	WALL CLEANOUT
WF	WASH FOUNTAIN
WH	WATER HEATER
WMF	WASHING MACHINE FIXTURE
WM	WATER METER
WS	WATER SOFTENER
UB	UTILITY BOX
UON	UNLESS OTHERWISE NOTES
YCO	YARD CLEANOUT

PLUMBING ROUGH-IN SCHEDULE

NOTES: (APPLIES TO ALL PLUMBING FIXTURES LISTED BELOW)
1) SIZES SHOWN ARE MINIMUMS. LARGER SIZES SHOWN ON THE DRAWING SHALL DICTATE THE ROUGH-IN SIZE. 2) SANITARY RISERS UP IN WALL TO FIXTURES SHALL BE A MINUMUM OF 2". 3) DOMESTIC WATER BRANCH PIPING OUTSIDE OF THE WALL/CHASE SHALL BE A MINIMUM OF 3/4" UNLESS NOTED OTHERWISE. ONLY THE FINAL RISE-DROP SHALL BE SMALLER. 4) FINAL SANITARY SIZE SHALL MATCH P-TRAP SIZE (REFER TO MATERIAL LIST).

TAG NAME	DESCRIPTION	COLD WATER	HOT WATER	SANITARY	VENT
EE-1	EMERGENCY EYE-FACE WASH	1/2"	1/2"	2"	1 1/2"
FD-1	FLOOR DRAIN	-	-	2"	1 1/2"
FD-2	FLOOR DRAIN	-	-	2"	1 1/2"
FD-3	FLOOR DRAIN	-	-	4"	2"
FD-4	FLOOR DRAIN	-	-	3"	1 1/2"
FS-1	FLOOR SINK	-	-	3"	1 1/2"
FS-2	FLOOR SINK	-	-	4"	2"
FS-3	FLOOR SINK	-	-	3"	1 1/2"
FSE-18	HAND SINK, REFER TO FSP.	1/2"	1/2"	1 1/2"	1 1/2"
FSE-22	WORK COUNTER WITH SINK, REFER TO FSP.	1/2"	1/2"	2" IW	-
FSE-62	WORK COUNTER WITH SINK, REFER TO FSP.	1/2"	1/2"	2" IW	-
FSE-64	HOSE REEL, REFER TO FSP.	1/2"	1/2"	-	-
FSE-68	HAND SINK, REFER TO FSP.	1/2"	1/2"	1 1/2"	1 1/2"
FSE-74	ROLL IN PROOFER, REFER TO FSP.	1/2"	-	3/4" IW	-
FSE-87	RACK OVEN, REFER TO FSP.	1/2	-	3/4" IW	-
FSE-91	ICE MAKER, REFER TO FSP.	3/8"	-	1/2" IW	-
FSE-100	HAND SINK, REFER TO FSP.	1/2"	1/2"	1 1/2"	1 1/2"
FSE-104	WORK COUNTER WITH SINK, REFER TO FSP.	1/2	1/2"	2" IW	-
FSE-107	SPRAY RINSE, REFER TO FSP.	3/4"	1/2"	-	-
FSE-118	HOSE STATION, REFER TO FSP.	1/2	1/2"	-	-
FSE-145	WORK COUNTER WITH SINK, REFER TO FSP.	1/2	1/2"	2" IW	-
FSE-146	WORK COUNTER WITH SINK, REFER TO FSP.	1/2	1/2"	2" IW	-
FSE-154	HOSE REEL, REFER TO FSP.	1/2"	1/2"	-	-
FSE-155	HOSE REEL, REFER TO FSP.	1/2"	1/2"	-	-
FSE-158	STEAMER, REFER TO FSP.	3/4"	-	1 1/2" IW	-
FSE-160	STEAMER, REFER TO FSP.	3/4"	-	1 1/2" IW	-
FSE-161	STEAMER, REFER TO FSP.	3/4"	-	1 1/2" IW	-
FSE-162	HOSE REEL, REFER TO FSP.	1/2"	1/2"	-	-
FSE-163	RACK OVEN, REFER TO FSP.	1/2"	-	3/4" IW	-
FSE-173	POT & PAN SINK, REFER TO FSP.	3/4"	3/4"	2" IW	-
FSE-175	SPRAY RINSE, REFER TO FSP.	3/4"	1/2"	-	-
FSE-184	HOSE REEL, REFER TO FSP.	1/2	1/2"	-	-
FSE-184	HOSE REEL, REFER TO FSP.	1/2"	1/2"	-	-
FSE-185	EYE/FACE WASHER, REFER TO FSP.	1/2"	1/2"	2"	-
FSE-189	DISHWASHER, REFER TO FSP.	3/4"	1"	2" IW	-
FSE-191	SPRAY RINSE, REFER TO FSP.	3/4"	1/2"	-	-
L-1	LAVATORY (ACCESSIBLE)	1/2"	1/2"	1 1/2"	1 1/2"
L-2	LAVATORY (ACCESSIBLE)	1/2"	1/2"	1 1/2"	1 1/2"
MB-1	MOP BASIN	3/4"	3/4"	3"	1 1/2"
MBT-1	MOP BASIN FAUCET	3/4"	3/4"	-	-
SK-1	SINK (ACCESSIBLE)	1/2"	1/2"	1 1/2"	1 1/2"
TD-1	TRENCH DRAIN	-	-	6"	3"
TD-2	TRENCH DRAIN	-	-	6"	3"
WC-1	WATER CLOSET (ACCESSIBLE)	1 1/2"	-	4"	2"
WC-2	WATER CLOSET (ACCESSIBLE)	1 1/2"	-	4"	2"
WMF-1	UTILITY BOX (WASHING MACHINE)	3/4"	3/4"	2"	1 1/4"

MECHANICAL RENOVATION NOTES:

THESE NOTES APPLY TO ALL MECHANICAL SHEETS AND TRADES, INCLUDING BUT NOT LIMITED TO, FIRE PROTECTION, PLUMBING, VENTILATION, PIPING AND TEMPERATURE CONTROL.

1. EXISTING CONDITIONS ARE SHOWN BASED ON INFORMATION OBTAINED FROM FIELD SURVEYS, EXISTING BUILDING DOCUMENTS, AND STAFF. VERIFY EXISTING CONDITIONS AND REPORT ANY CONFLICTS BEFORE PROCEEDING.
2. NOT ALL EXISTING DUCTWORK AND PIPING IS SHOWN. VERIFY EXISTING CONDITIONS BEFORE STARTING WORK. NOTIFY ENGINEER OF ANY CONFLICTS WITH NEW WORK.
3. FIELD VERIFY THE AVAILABLE CLEARANCES FOR DUCTWORK AND PIPING BEFORE FABRICATION. RISES AND DROPS MAY BE NECESSARY BECAUSE OF EXISTING FIELD CONDITIONS.
4. EACH CONTRACTOR SHALL FIELD VERIFY ACCESSIBILITY TO THE AREA OF THEIR WORK AND SHALL NOTIFY THE ARCHITECT/ENGINEER PRIOR TO BIDDING IF OTHER UTILITIES ARE REQUIRED TO BE REMOVED OR RELOCATED TO ALLOW ACCESS TO THEIR AREA OF WORK.
5. EACH CONTRACTOR SHALL CUT AND PATCH ROOFS, WALLS, AND FLOORS ASSOCIATED WITH THEIR WORK.
6. THIS CONTRACTOR IS RESPONSIBLE FOR REMOVAL AND REPLACEMENT OF CEILINGS, CEILING TILES, AND CEILING GRIDS ASSOCIATED WITH AREAS OF WORK REQUIRED BY THEIR WORK.
7. WHERE EXISTING MECHANICAL SYSTEMS ARE LOCATED IN AREAS THAT CONFLICT WITH NEW EQUIPMENT, PIPING, OR DUCTWORK TO BE INSTALLED, EACH CONTRACTOR SHALL EITHER ARRANGE NEW EQUIPMENT, PIPING, OR DUCTWORK IN SUCH A FASHION THAT IT DOES NOT CONFLICT WITH EXISTING SYSTEMS, OR REWORK EXISTING MECHANICAL SYSTEMS TO ALLOW FOR INSTALLATION OF NEW EQUIPMENT, PIPING, OR DUCTWORK.
8. PROVIDE TEMPORARY CONNECTIONS TO MAINTAIN EXISTING SYSTEMS IN SERVICE DURING CONSTRUCTION. MAINTAIN ACCESS TO EXISTING MECHANICAL INSTALLATIONS THAT REMAIN ACTIVE.
9. OBTAIN PERMISSION FROM OWNER BEFORE SHUTTING DOWN ANY SYSTEM FOR ANY REASON. MAINTAIN SERVICE TO ALL COMPONENTS THAT ARE TO REMAIN UNTIL NEW SYSTEMS ARE INSTALLED.
10. MAINTAIN EXISTING SYSTEM IN SERVICE UNTIL NEW SYSTEM IS COMPLETE AND READY FOR TIE IN AND SWITCHOVER. DRAIN SYSTEM ONLY TO MAKE SWITCHOVERS AND CONNECTIONS. OBTAIN PERMISSION FROM OWNER BEFORE PARTIALLY OR COMPLETELY DRAINING SYSTEM. MAKE CHANGEOVER TO NEW SYSTEMS WITH MINIMUM OUTAGE.
11. DISCONNECT AND REMOVE MECHANICAL DEVICES AND EQUIPMENT SERVING EQUIPMENT THAT HAS BEEN REMOVED.

MECHANICAL GENERAL NOTES:

THESE NOTES APPLY TO ALL MECHANICAL SHEETS AND TRADES, INCLUDING BUT NOT LIMITED TO, FIRE PROTECTION, PLUMBING, VENTILATION, PIPING AND TEMPERATURE CONTROL.

1. DRAWINGS SHOWING LOCATIONS OF EQUIPMENT, DUCTWORK, PIPING, ETC. ARE DIAGRAMMATIC AND MAY NOT ALWAYS REFLECT EXACT INSTALLATION CONDITIONS. DRAWINGS SHOW THE GENERAL ARRANGEMENT OF DUCTWORK, PIPING, EQUIPMENT, ETC., AND MAY NOT INCLUDE ALL OFFSETS AND FITTINGS REQUIRED FOR COMPLETE INSTALLATION. THE DRAWINGS SHALL BE FOLLOWED AS CLOSELY AS ACTUAL BUILDING CONSTRUCTION AND THE WORK OF OTHERS WILL PERMIT.
2. DO NOT SCALE DRAWINGS. VERIFY ALL DIMENSIONS AND CLEARANCES FROM ARCHITECTURAL, STRUCTURAL, SUBMITTALS, AND OTHER APPROPRIATE DRAWINGS OR PHYSICALLY AT SITE. REVIEW ALL DRAWINGS, INCLUDING THOSE OF OTHER TRADES.
3. COORDINATE ALL WORK WITH ALL OTHER TRADES PRIOR TO INSTALLATION TO PROVIDE CLEARANCES REQUIRED FOR OPERATION, MAINTENANCE, CODE COMPLIANCE, AND TO VERIFY NON-INTERFERENCE WITH OTHER WORK. DO NOT FABRICATE PRIOR TO VERIFICATION OF NECESSARY CLEARANCES FOR ALL TRADES. BRING ANY INTERFERENCES OR CONFLICTS TO THE ATTENTION OF THE ARCHITECT/ENGINEER BEFORE PROCEEDING WITH FABRICATION OR EQUIPMENT ORDERS.
4. REVIEW SPACE REQUIREMENTS OF EQUIPMENT SPECIFIED OR SUBSTITUTED AND MAKE REASONABLE ACCOMMODATIONS IN LAYOUT AND POSITIONING TO PROVIDE PROPER ACCESS.
5. ANY CHANGES REQUIRED TO ELIMINATE CONFLICTS OR THAT RESULT FROM A FAILURE TO COORDINATE SHALL BE MADE BY THE CONTRACTOR WITHOUT ADDITIONAL COST OR EXPENSE TO OTHERS.
6. EACH CONTRACTOR IS RESPONSIBLE FOR ALL COSTS ASSOCIATED WITH ELECTRICAL CHANGES REQUIRED FOR EQUIPMENT PROPOSED THAT DIFFERS FROM THE BASIS OF DESIGN.
7. REFER TO ARCHITECTURAL REFLECTED CEILING PLAN, ELECTRICAL, TECHNOLOGY AUDIO/VISUAL, AND OTHER MECHANICAL PLANS FOR EXACT LOCATIONS OF ALL CEILING MOUNTED DEVICES, OTHER THAN SPRINKLERS.
8. EACH CONTRACTOR IS RESPONSIBLE FOR DAMAGE CAUSED BY THEIR ACTIONS TO WALLS, FLOORS, CEILINGS, AND ROOFS. THE CONTRACTOR WHOSE WORK CAUSES DAMAGE IS RESPONSIBLE FOR PATCHING TO MATCH ORIGINAL CONSTRUCTION, FIRE RATING, AND FINISH.
9. IN AREAS WITH DRYWALL CEILINGS COORDINATE LOCATIONS OF ACCESS PANELS WITH THE DRY WALL CONTRACTOR FOR ACCESS TO VALVES, DUCTWORK ACCESSORIES, DAMPERS, ETC. COORDINATE PANEL TYPE AND COLOR WITH ARCHITECT. NOTIFY THE DRY WALL CONTRACTOR OF THE REQUIRED ACCESS PANELS PRIOR TO BIDDING.
10. SEAL ALL FLOOR, WALL, AND ROOF PENETRATIONS AIRTIGHT WHERE CONDUITS, PIPING, AND DUCTS PENETRATE. PENETRATIONS THROUGH EXTERIOR WALLS AND ROOF SHALL BE SEALED AIRTIGHT WITH WATERPROOFING MATERIALS RECOMMENDED BY MANUFACTURER FOR OUTDOOR USE.
11. CAULK ALL PIPE AND DUCT PENETRATIONS OF FULL HEIGHT NON-FIRE RATED WALL, PARTITION, FLOOR, AND ROOF ASSEMBLIES. THIS IS ESSENTIAL TO PREVENT NOISE TRANSMISSION FROM ONE ROOM TO ANOTHER AND TO PROVIDE THE DESIRED NC LEVELS WITHIN ROOMS.
12. WHERE PIPES AND DUCTS ARE SHOWN TO PENETRATE FLOORS, PROVIDE SLEEVED OPENINGS WITH THE TOP EDGE RAISED ABOVE FLOOR SURFACE IN ACCORDANCE WITH ALL RELEVANT SPEC SECTIONS. SEAL SLEEVE PERIMETER TO BE WATERTIGHT.
13. EQUIPMENT SIZES AND SERVICE CLEARANCE REQUIREMENTS VARY AMONG DIFFERENT MANUFACTURERS. CONSULT APPROVED SHOP DRAWINGS FOR EQUIPMENT SIZES AND REQUIRED SERVICE CLEARANCES. COORDINATE WITH LAYOUT OF EQUIPMENT PADS, PIPING, DUCTWORK, ETC.
14. DO NOT BLOCK TUBE PULL OR EQUIPMENT SERVICE CLEARANCES.
15. MAINTAIN A MINIMUM WORKING CLEARANCE OF 3'-6" IN FRONT OF ALL ELECTRICAL EQUIPMENT REQUIRING MAINTENANCE, INSPECTION, AND TESTING INCLUDING BUT NOT LIMITED TO PANELS, DISTRIBUTION PANELS, SWITCHBOARDS, MOTOR CONTROL CENTERS, TRANSFORMERS, EQUIPMENT DISCONNECTS AND STARTERS.
16. MAINTAIN THE DEDICATED ELECTRICAL EQUIPMENT SPACE DEFINED BY THE WIDTH / DEPTH OF ELECTRICAL EQUIPMENT MEASURED FROM THE FLOOR TO A HEIGHT 6'-0" ABOVE THE EQUIPMENT OR THE STRUCTURAL CEILING, WHICHEVER IS LOWER. SYSTEMS FOREIGN TO THE ELECTRICAL DISTRIBUTION SYSTEM ARE NOT ALLOWED IN THE DEDICATED ELECTRICAL SPACE INCLUDING, DUCTWORK, PIPING, ETC.
17. PROVIDE CONCRETE EQUIPMENT PAD FOR ALL FLOOR MOUNTED EQUIPMENT. PAD SHALL EXTEND MINIMUM 6" BEYOND ALL SIDES OF EQUIPMENT.
18. DO NOT SUPPORT EQUIPMENT, PIPING, OR DUCTWORK FROM METAL DECKING OR OTHER NON-STRUCTURAL BUILDING ELEMENTS. ANCHORS EMBEDDED IN CONCRETE SHALL BE CRACKED CONCRETE APPROVED IN ACCORDANCE WITH SPECIFICATIONS.

PLUMBING GENERAL NOTES:

1. THE SYMBOLS AND THE MATERIAL LIST ARE FOR THE CONVENIENCE OF THE CONTRACTOR. CONTRACTOR SHALL VERIFY QUANTITIES AND FURNISH ALL MATERIALS REQUIRED FOR FULLY OPERATIONAL SYSTEMS, WHETHER SPECIFIED OR NOT.
2. CATALOG NUMBERS SHALL NOT BE CONSIDERED COMPLETE, BUT ARE GIVEN AS AN AID TO THE CONTRACTOR AND TO INDICATE THE QUALITY REQUIRED. CONTRACTOR IS RESPONSIBLE FOR A COMPLETE DESCRIPTION OF MATERIAL ON THESE DRAWINGS AND IN THE SPECIFICATIONS BEFORE ORDERING. THE DESCRIPTION OF THE MATERIAL TAKES PRECEDENCE OVER THE CATALOG NUMBER. THE FIRST MANUFACTURER LISTED IS THE BASIS OF DESIGN.
3. CONTRACTOR SHALL VERIFY THAT FIXTURES SUPPLIED ARE APPROVED PER ALL APPLICABLE STATE, LOCAL AND GOVERNING AUTHORITIES.
4. ALL FIXTURES SHALL CONFORM TO FEDERAL ACT S.3874
5. INVERT ELEVATIONS ARE FROM EXISTING DRAWINGS AND MAY NOT BE ACCURATE. VERIFY ALL ELEVATIONS BEFORE BEGINNING WORK.
6. VERIFY UNDERGROUND PIPE SIZES, INVERT ELEVATIONS, AND LOCATIONS PRIOR TO BEGINNING ANY WORK.
7. REFER TO THE PLUMBING ROUGH-IN SCHEDULE FOR THE SIZES OF BRANCH PIPES TO PLUMBING FIXTURES.
8. EXISTING CONDITIONS ON DEMOLITION PLANS ARE PROVIDED TO INDICATE THE GENERAL SCOPE OF ITEMS TO BE REMOVED. REFER TO SPECIFICATION SECTION 22 05 05 FOR ADDITIONAL DEMOLITION INFORMATION.
9. P.C. SHALL CUT AND PATCH EXISTING AS REQUIRED FOR NEW OR DEMOLITION WORK UNLESS NOTED OTHERWISE. REFER TO SPECIFICATION SECTION 22 05 05 FOR ADDITIONAL INFORMATION.
10. P.C. SHALL REFERENCE ALL PLANS WITHIN DRAWING SET FOR SCOPE OF WORK. P.C. SHALL REVIEW FOOD SERVICE DRAWINGS FOR COORDINATION OF WORK BETWEEN P.C. AND FSEC.
11. P.C. SHALL PROVIDE ALL NECESSARY SHUT-OFF VALVES, PRESSURE REGULATORS, INDIVIDUAL EQUIPMENT SUPPLY STOPS, ETC. REQUIRED UPSTREAM OF FINAL SUPPLY CONNECTION(S) TO FOOD SERVICE EQUIPMENT UNLESS NOTED OTHERWISE.
12. ALL INDIRECT WASTES FOR FOODSERVICE EQUIPMENT WILL BE EXTENDED TO FLOOR DRAINS BY MECHANICAL TRADES, EXCEPT FOR THE WALK-IN REFRIGERATOR/FREEZER BLOWER COIL DRAINLINES AND DRAINLINES WITHIN THE CUSTOM FABRICATED COUNTERS WHICH WILL BE EXTENDED TO FLOOR DRAINS BY THE FSEC.
13. THE FSEC IS RESPONSIBLE FOR SETTING FOOD SERVICE EQUIPMENT IN PLACE. FINAL CONNECTIONS AND INTERCONNECTIONS FOR THIS EQUIPMENT ARE THE RESPONSIBILITY OF THE P.C.
14. SINK FAUCETS FURNISHED LOOSE BY FSEC FOR INSTALLATION BY P.C. SINK ROTARY DRAIN & OVERFLOW FURNISHED AND INSTALLED BY FSEC; TAILPIECE, P-TRAP, ESCUTCHEON PLATES AND DRAIN CONNECTION FURNISHED AND INSTALLED BY P.C. EXCEPT FOR TAILPIECE AND P-TRAP FOR WALL MOUNTED HANDSINKS WHICH ARE PROVIDED BY FSEC AND INSTALLED BY P.C.
15. HEALTH CODES REQUIRE THAT ALL PLUMBING BE ENCLOSED IN WALLS OR FLOOR AND THAT EXPOSED PIPING RUNS BE AS SHORT AS POSSIBLE. GAS PIPING TO BE SLEEVED AND VENTED PER CODE SO IT IS CONCEALED WITHIN THE WALL. EXPOSED HORIZONTAL PIPING MUST BE 6" ABOVE THE FLOOR AND AT LEAST 1" OFF THE WALL. ANY EXPOSED HAND SINK PIPING (BOTH DRAIN AND SUPPLY LINES) ARE TO BE CHROME PLATED.
16. RECOMMENDED HOT WATER TEMPERATURES FOR SINKS SHOULD BE AS FOLLOWS: POT & PAN SINKS SET AT 120° F MAXIMUM, HAND SINKS SET AT 110° F MAXIMUM AND ALL OTHER SINKS SET AT 110-120° F MAXIMUM. HOT WATER TEMPERATURES MUST CONFORM TO CODE REQUIREMENTS.
17. FLOOR TROUGHS NOTED ON FOOD SERVICE PLANS SHALL BE PROVIDED BY FSEC, INSTALLED BY P.C. REFER TO 6/FS300 FOR FLOOR TROUGH DETAIL.

WATER HEATER SIZING:

1. KITCHEN WATER HEATER DEMAND
   A. 3000 MEALS PER DAY SERVED
   B. ASHRAE APPLICATIONS, CHAPTER 51 FOR SERVICE WATER HEATING, FIG. 20 - FOOD SERVICE INDICATES 1.5 GPH RECOVERY CAPACITY PER MAXIMUM MEALS PER HOUR
   C. ESTIMATE 500 MEALS PER HOUR
   D. 500*1.5 = 750 GPH RECOVERY CAPACITY REQUIRED FOR KITCHEN
2. LAUNDRY WATER HEATER DEMAND
   A. AO SMITH ONLINE SIZING
   B. COMMERCIAL LAUNDRY
   C. (6) 100 LB WASHERS
   D. PEAK DEMAND = 1,680 GPH
3. MAXIMUM SYSTEM DEMAND:
   A. KITCHEN = 750 GPH
   B. LAUNDRY = 1680 GPH
   C. TOTAL = 2,430 GPH
4. AVAILABLE SYSTEM CAPACITY:
   A. WH-4 = 1572 GPH
   B. WH-5 = 1572 GPH
   C. TOTAL = 3144 GPH

PLUMBING SLOPE REQUIREMENTS:

BASED ON PLUMBING CODE: UPC-2021

INTERIOR:	
SANITARY WASTE:	1/4" PER FOOT
GREASE WASTE:	1/4" PER FOOT
CONDENSATE AND INDIRECT DRAINAGE:	1/8" PER FOOT
SANITARY AND GREASE VENT:	NO SPECIFIC PITCH, PITCH TO FIXTURES
DOMESTIC WATER:	NO SPECIFIC PITCH, PITCH TO FIXTURES

PLUMBING SHEET INDEX

P0.0	PLUMBING COVERSHEET
PD1.1	LEVEL 01 DEMOLITION PLAN - PLUMBING
P0.1	UNDERFLOOR PLAN - AREA A - PLUMBING
P0.2	UNDERFLOOR PLAN - AREA B - PLUMBING
P1.1	LEVEL 01 PLAN - AREA A - PLUMBING
P1.2	LEVEL 01 PLAN - AREA B - PLUMBING
P1.3	LEVEL 02 PLAN - AREA A - PLUMBING
P1.4	LEVEL 02 PLAN - AREA B - PLUMBING
P3.0	ENLARGED PLAN - PLUMBING
P3.1	ENLARGED PLAN - PLUMBING
P4.1	PLUMBING DETAILS
P4.2	PLUMBING DETAILS
P5.1	PLUMBING DIAGRAMS
P6.1	PLUMBING SCHEDULES
P6.2	PLUMBING SCHEDULES
GRAND TOTAL: 15	

Farnsworth GROUP
14225 UNIVERSITY AVENUE, SUITE 110
WALKEE, IOWA 50263
(515) 225-3469 / info@f-w.com
www.f-w.com
Engineers | Architects | Surveyors | Scientists

RIPPE ASSOCIATES
FOODSERVICE DESIGN + CONSULTING

kpff

IMEG

Bishop Engineering

ISSUE:
DATE: DESCRIPTION:

BID SET

PROJECT:
STATE OF IOWA - DEPARTMENT OF CORRECTIONS

CLARINDA CORRECTIONAL FACILITY - KITCHEN & LAUNDRY ADDITION

2000 N 16TH ST, CLARINDA, IA 51632

DATE:	02/09/2024
DESIGNED:	MIKMCC
DRAWN:	MIKMCC
REVIEWED:	DELLLE

SHEET TITLE:
PLUMBING COVERSHEET

SHEET NUMBER:
P0.0

PROJECT NO.: 0240202.00
RFB922300-02

IMEG 2882 106TH STREET DES MOINES, IA 50322 P: 515.334.9906 F: 515.334.9908
www.imegcorp.com

IMEG CORP. RESERVES PROPRIETARY RIGHTS, INCLUDING COPYRIGHTS, TO THIS DRAWING AND THE DATA SHOWN THEREON. SAID DRAWING AND/OR DATA ARE THE EXCLUSIVE PROPERTY OF IMEG CORP. AND CANNOT BE USED OR REPRODUCED FOR ANY OTHER PROJECT WITHOUT THE EXPRESSED WRITTEN APPROVAL AND PARTICIPATION OF IMEG CORP. ©2024 IMEG CORP.

0 1 2 3
REF. SCALE IN INCHES — PROJECT #210076B8.00

2/2/2024 3:01:05 PM

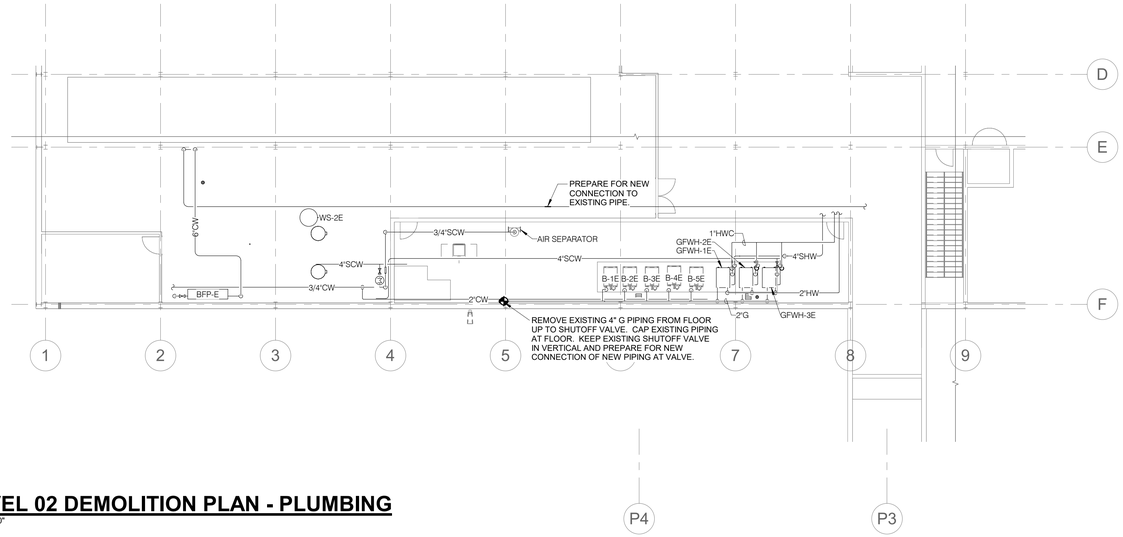

NORTH

1 LEVEL 02 DEMOLITION PLAN - PLUMBING

3/32" = 1'-0"

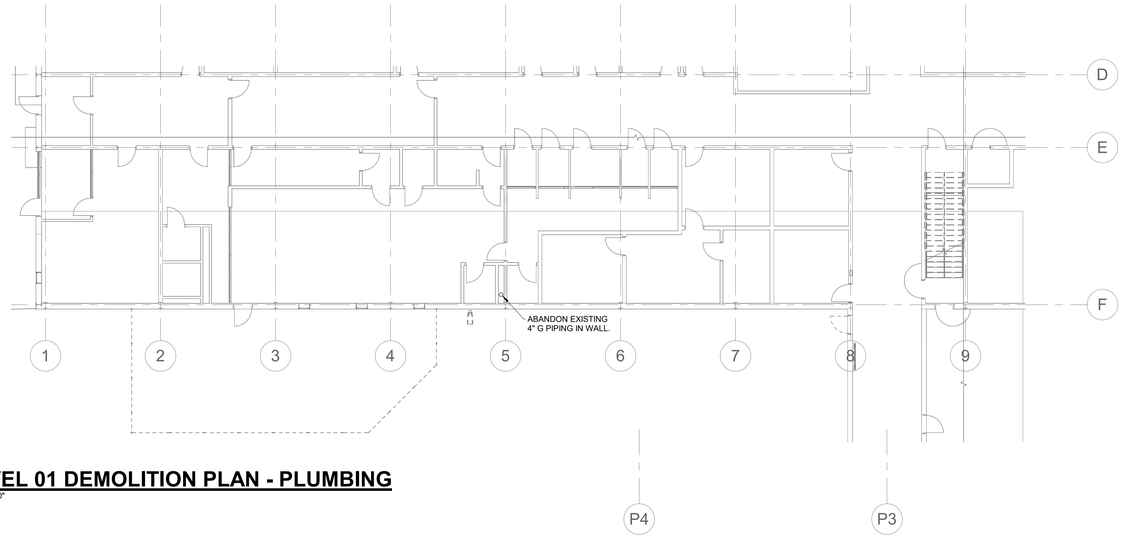

NORTH

2 LEVEL 01 DEMOLITION PLAN - PLUMBING

3/32" = 1'-0"

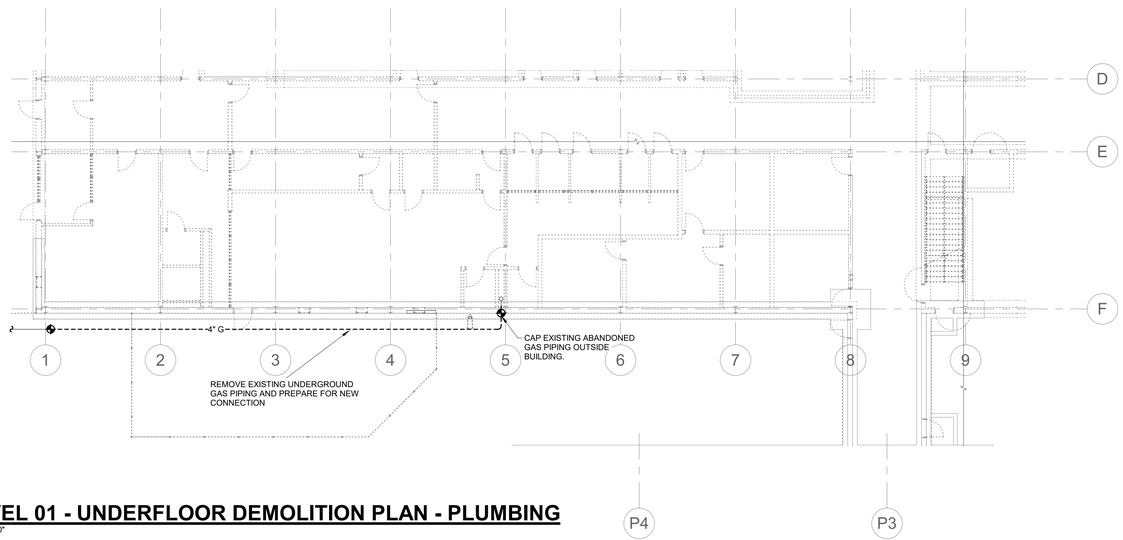

NORTH

3 LEVEL 01 - UNDERFLOOR DEMOLITION PLAN - PLUMBING

3/32" = 1'-0"

Farnsworth GROUP
14225 UNIVERSITY AVENUE, SUITE 110
WALKEE, IOWA 50263
(515) 225-3469 / info@f-w.com
www.f-w.com
Engineers | Architects | Surveyors | Scientists

RIPPE ASSOCIATES
FOODSERVICE DESIGN + CONSULTING

kpff

IMEG

Bishop Engineering

ISSUE:

#	DATE:	DESCRIPTION:

BID SET

PROJECT:

STATE OF IOWA - DEPARTMENT OF CORRECTIONS

CLARINDA CORRECTIONAL FACILITY - KITCHEN & LAUNDRY ADDITION

2000 N 16TH ST, CLARINDA, IA 51632

DATE:	02/09/2024
DESIGNED:	MIKMCC
DRAWN:	MIKMCC
REVIEWED:	DELLLE

SHEET TITLE:

LEVEL 01 DEMOLITION PLAN - PLUMBING

SHEET NUMBER:

PD1.1

PROJECT NO.: 0240202.00
RFB922300-02

IMEG 2882 106TH STREET DES MOINES, IA 50322 P: 515.334.9906 F: 515.334.9908
www.imegcorp.com

IMEG CORP. RESERVES PROPRIETARY RIGHTS, INCLUDING COPYRIGHTS, TO THIS DRAWING AND THE DATA SHOWN THEREON. SAID DRAWING AND/OR DATA ARE THE EXCLUSIVE PROPERTY OF IMEG CORP. AND SHALL NOT BE USED OR REPRODUCED FOR ANY OTHER PROJECT WITHOUT THE EXPRESS WRITTEN APPROVAL AND PARTICIPATION OF IMEG CORP. ©2024 IMEG CORP.

0 1 2 3
REF. SCALE IN INCHES
PROJECT #01007688.00

2/22/2024 1:02:35 PM

KEYNOTES: #

1. PROVIDE 45 DEGREE CONNECTION TO SANITARY FOR VENTING. RISE VERTICALLY A MINIMUM OF 6" ABOVE FLOOD RIM BEFORE OFFSETTING HORIZONTALLY.
2. CIRCUIT VENT SHALL SERVE (2) FLOOR DRAINS. COORDINATE LOCATION OF VENT RISE WITH OPENING IN WALLS FOR DRYERS.

1 UNDERFLOOR PLAN - AREA A - PLUMBING

1/8" = 1'-0"

NORTH

Farnsworth GROUP
14225 UNIVERSITY AVENUE, SUITE 110
WALKEE, IOWA 50263
(515) 225-3469 / info@f-w.com
www.f-w.com
Engineers | Architects | Surveyors | Scientists

RIPPE ASSOCIATES
FOODSERVICE DESIGN + CONSULTING

kpff

IMEG

Bishop Engineering

ISSUE:

#	DATE:	DESCRIPTION:

BID SET

PROJECT:

STATE OF IOWA - DEPARTMENT OF CORRECTIONS

CLARINDA CORRECTIONAL FACILITY - KITCHEN & LAUNDRY ADDITION

2000 N 16TH ST, CLARINDA, IA 51632

DATE:	02/09/2024
DESIGNED:	MIKMCC
DRAWN:	MIKMCC
REVIEWED:	DELLLE

SHEET TITLE:

UNDERFLOOR PLAN - AREA A - PLUMBING

SHEET NUMBER:

P0.1

PROJECT NO.: 0240202.00
RFB922300-02

IMEG
2892 10ETH STREET
DES MONES, IA 50322
P: 515.334.9906 F: 515.334.9908
www.imegcorp.com

IMEG CORP. RESERVES PROPRIETARY RIGHTS, INCLUDING COPYRIGHTS, TO THIS DRAWING AND THE DATA SHOWN THEREON. SAID DRAWING AND/OR DATA ARE THE EXCLUSIVE PROPERTY OF IMEG CORP. AND SHALL NOT BE USED OR REPRODUCED FOR ANY OTHER PROJECT WITHOUT THE EXPRESS WRITTEN APPROVAL AND PARTICIPATION OF IMEG CORP. ©2024 IMEG CORP.

0 1 2 3
REF. SCALE IN INCHES
PROJECT #210076B8.00

2/2/2024 3:01:13 PM

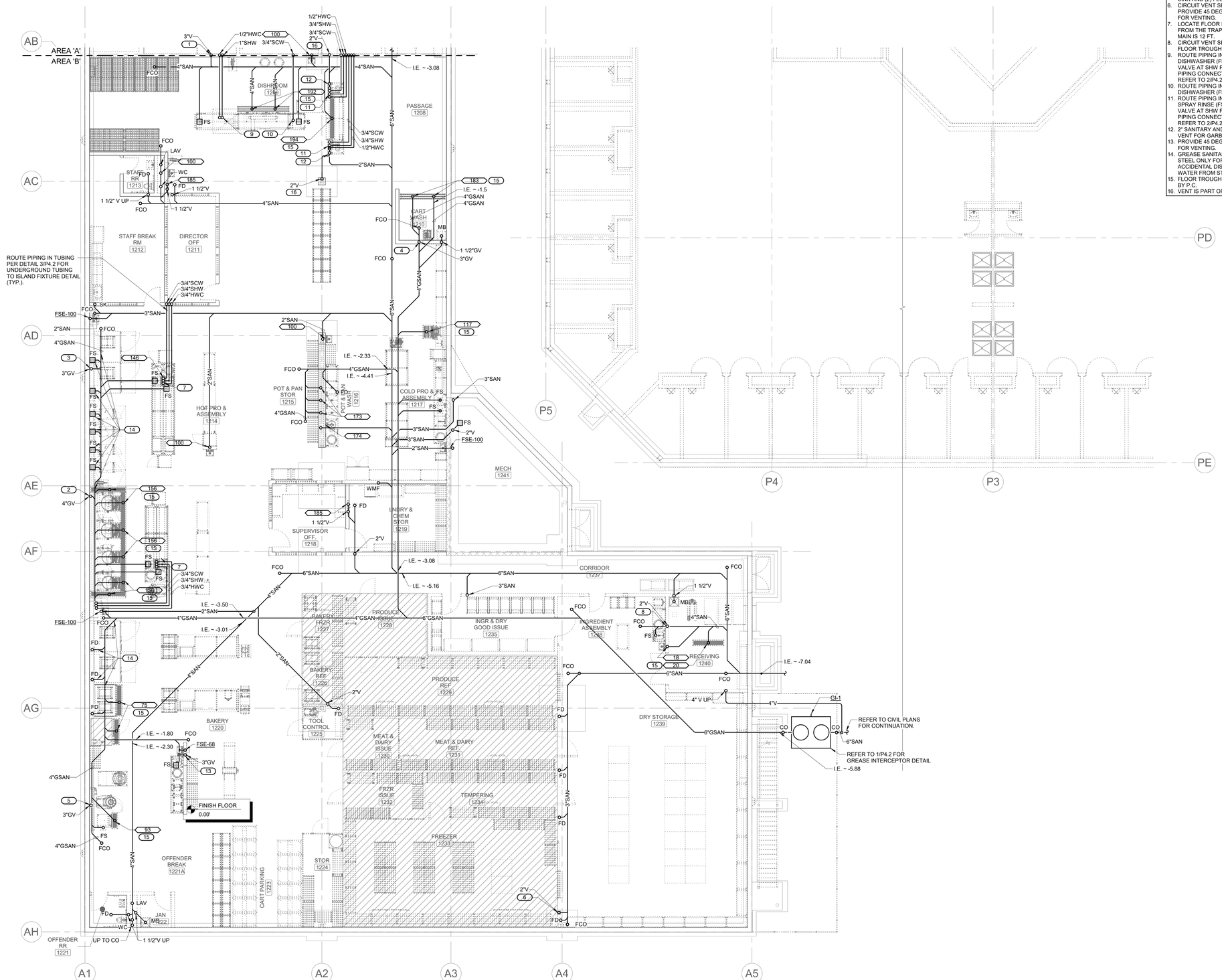

1 UNDERFLOOR PLAN - AREA B - PLUMBING

1/8" = 1'-0"

NORTH

KEYNOTES: #

1. CIRCUIT VENT SERVING (2) FLOOR SINKS, (2) 192 FLOOR TROUGHS AND (1) 194 FLOOR TROUGH. PROVIDE 45 DEGREE CONNECTION TO SANITARY FOR VENTING.
2. CIRCUIT VENT SERVING (6) 156 FLOOR TROUGHS AND (2) FLOOR SINK.
3. CIRCUIT VENT SERVING (8) FLOOR SINKS.
4. CIRCUIT VENT SERVING (2) 183 FLOOR TROUGHS, (1) 117 FLOOR TROUGH AND (2) FLOOR SINKS.
5. 3" CIRCUIT VENT SERVING (1) FSE-93 FLOOR TROUGH, (2) FSE-75 FLOOR TROUGHS, (1) FLOOR SINK AND (2) FLOOR DRAINS.
6. CIRCUIT VENT SERVING (4) FLOOR DRAINS. PROVIDE 45 DEGREE CONNECTION TO SANITARY FOR VENTING.
7. LOCATE FLOOR SINK SO THE MAXIMUM DISTANCE FROM THE TRAP ARM TO THE CIRCUIT VENTED MAIN IS 12 FT.
8. CIRCUIT VENT SERVING (1) FLOOR SINK AND (1) FLOOR TROUGH.
9. ROUTE PIPING IN UNDERGROUND TUBING UP TO DISHWASHER (FSE- 189). PROVIDE SHUTOFF VALVE AT SHW PIPE ABOVE FLOOR WITH HWC PIPING CONNECTED PRIOR TO SHUTOFF VALVE. REFER TO 2/P4.2.
10. ROUTE PIPING IN UNDERGROUND TUBING UP TO DISHWASHER (FSE- 189). REFER TO 2/P4.2.
11. ROUTE PIPING IN UNDERGROUND TUBING UP TO SPRAY RINSE (FSE-191). PROVIDE SHUTOFF VALVE AT SHW PIPE ABOVE FLOOR WITH HWC PIPING CONNECTED PRIOR TO SHUTOFF VALVE. REFER TO 2/P4.2.
12. 2" SANITARY AND 2" VENT PIPING FROM ISLAND VENT FOR GARBAGE DISPOAL (FSE-187).
13. PROVIDE 45 DEGREE CONNECTION TO SANITARY FOR VENTING.
14. GREASE SANITARY PIPING SHALL BE STAINLESS STEEL ONLY FOR THIS SECTION IN CASE OF ACCIDENTAL DISCHARGE OF EXCESSIVELY HOT WATER FROM STEAMERS AND RACK OVENS.
15. FLOOR TROUGH PROVIDED BY FSEC, INSTALLED BY P.C.
16. VENT IS PART OF ISLAND VENTING FOR FSE-187.

Farnsworth GROUP
14225 UNIVERSITY AVENUE, SUITE 110
WALKEE, IOWA 50263
(515) 225-3469 / info@f-w.com
www.f-w.com
Engineers | Architects | Surveyors | Scientists

RIPPE ASSOCIATES
FOODSERVICE DESIGN + CONSULTING

kpff

IMEG

Bishop Engineering

ISSUE:

#	DATE:	DESCRIPTION:

BID SET

PROJECT:

STATE OF IOWA - DEPARTMENT OF CORRECTIONS

CLARINDA CORRECTIONAL FACILITY - KITCHEN & LAUNDRY ADDITION

2000 N 16TH ST, CLARINDA, IA 51632

DATE:	02/09/2024
DESIGNED:	MIKMCC
DRAWN:	MIKMCC
REVIEWED:	DELLLE

SHEET TITLE:

UNDERFLOOR PLAN - AREA B - PLUMBING

SHEET NUMBER:

P0.2

IMEG
2892 106TH STREET
DES MOINES, IA 50322
P: 515.334.9906 F: 515.334.9908
www.imegcorp.com

IMEG CORP. RESERVES PROPRIETARY RIGHTS, INCLUDING COPYRIGHTS, TO THIS DRAWING AND THE DATA SHOWN THEREON. SAID DRAWING AND/OR DATA ARE THE EXCLUSIVE PROPERTY OF IMEG CORP. AND SHALL NOT BE USED OR REPRODUCED FOR ANY OTHER PROJECT WITHOUT THE EXPRESS WRITTEN APPROVAL AND PARTICIPATION OF IMEG CORP. ©2024 IMEG CORP.

0 1 2 3
REF. SCALE IN INCHES
PROJECT #21007688.00

PROJECT NO.: 0240202.00
RFB922300-02

2/2/2024 3:01:26 PM

KEYNOTES: (#)

1. CORE DRILL THROUGH EXISTING PRECAST EXTERIOR WALL. CORES SHALL BE COORDINATED WITH EXISTING VERTICAL CABLING IN WALL. REFER TO EXISTING WALL SCANNING DATA FOUND ON STRUCTURAL PLANS. COORDINATE NEW WALL OPENING WITH PRECAST SUPPLIER SO CORE DRILLING IS NOT REQUIRED. ALL OPENINGS SHALL BE COORDINATED PRIOR TO ORDERING PRECAST AND COORDINATED TO ALIGN WITH NEW CORES IN EXISTING PRECAST WALL. REFER TO 5/P4.2 FOR FIRE RATED BARRIER PENETRATION DETAIL (TYP.)
2. ROUTE WATER PIPING EXPOSED ALONG WALL WITHIN CAGED AREA BEHIND WASHERS. PROVIDE SHUTOFF VALVES AT 60" AFF AND CAP FOR BASE BID. INCLUDE PIPING DOWNSTREAM OF SHUTOFF VALVE AND CONNECT PIPING TO WASHER FOR LAUNDRY ADD ALTERNATE. REFER TO DETAIL 3/P4.2.
3. PROVIDE 1/2" CA DROP WITH SHUTOFF AND 1/4" QUICK CONNECT/POINT OF USE COUPLING. PROVIDE FLEXIBLE HOSE AND CONNECT TO DRYER. DRYER PROVIDED WITH 1/4" COMPRESSED AIR QUICK CONNECTION BASED ON BASIS OF DESIGN (MILNOR M122). CONFIRM FINAL REQUIREMENTS WITH DRYER PROVIDED.
4. BASE BID FOR LAUNDRY AREA SHALL INCLUDE INSTALLING BRANCH PIPE WITH SHUTOFF VALVE AND CAP FOR GAS PIPING. ADD ALTERNATE FOR LAUNDRY SHALL INCLUDE ALL DOWNSTREAM GAS PIPING, REGULATORS AND FINAL CONNECTIONS TO DRYERS.
5. BASE BID FOR LAUNDRY AREA SHALL INCLUDE INSTALLING PIPING FROM THE AIR COMPRESSOR TO THE DRYER CHASE AND CAPPING THE PIPE. ADD ALTERNATE SHALL INCLUDE PIPING FROM CAP TO ALL DRYERS.
6. PROVIDE EXPANSION JOINT EJ-5 PER 22 0516 FOR ANY SHW AND HWC CPVC OR PEX PIPING INSTALLED (TYP.2). LOCATE ANCHORS AT EACH END AND PROVIDE ALIGNMENT GUIDES AS RECOMMENDED BY MANUFACTURER OF PIPING. APPROXIMATELY 3" OF EXPANSION ANTICIPATED.
7. PROVIDE EXPANSION JOINT EJ-5 PER 22 0516 FOR ANY SHW AND HWC CPVC OR PEX PIPING INSTALLED (TYP.2). LOCATE ANCHORS AT EACH END AND PROVIDE ALIGNMENT GUIDES AS RECOMMENDED BY MANUFACTURER OF PIPING. APPROXIMATELY 2" OF EXPANSION ANTICIPATED.

NORTH

1 LEVEL 01 PLAN - AREA A - PLUMBING

1/8" = 1'-0"

Farnsworth GROUP
14225 UNIVERSITY AVENUE, SUITE 110
WALKEE, IOWA 50263
(515) 225-3469 / info@f-w.com
www.f-w.com
Engineers | Architects | Surveyors | Scientists

RIPPE ASSOCIATES
FOODSERVICE DESIGN + CONSULTING

kpff

IMEG

Bishop Engineering

ISSUE:

#	DATE:	DESCRIPTION:

BID SET

PROJECT:

STATE OF IOWA - DEPARTMENT OF CORRECTIONS

CLARINDA CORRECTIONAL FACILITY - KITCHEN & LAUNDRY ADDITION

2000 N 16TH ST, CLARINDA, IA 51632

DATE:	02/09/2024
DESIGNED:	MIKMCC
DRAWN:	MIKMCC
REVIEWED:	DELLLE

SHEET TITLE:

LEVEL 01 PLAN - AREA A - PLUMBING

SHEET NUMBER:

P1.1

IMEG 2882 106TH STREET DES MOINES, IA 50322 P: 515.334.9606 F: 515.334.9908
www.imegcorp.com

IMEG CORP. RESERVES PROPRIETARY RIGHTS, INCLUDING COPYRIGHTS, TO THIS DRAWING AND THE DATA SHOWN THEREON. SAID DRAWING AND/OR DATA ARE THE EXCLUSIVE PROPERTY OF IMEG CORP. AND SHALL NOT BE USED OR REPRODUCED FOR ANY OTHER PROJECT WITHOUT THE EXPRESS WRITTEN APPROVAL AND PARTICIPATION OF IMEG CORP. ©2024 IMEG CORP.

0 1 2 3
REF. SCALE IN INCHES PROJECT #21007688.00

PROJECT NO.: 0240202.00
RFB922300-02

2/2/2024 3:01:34 PM

KEYNOTES: #

1. FLOOR DRAIN SHALL RECEIVE REFRIGERATION SYSTEM COIL CONDENSATE. ROUTING OF CONDENSATE PIPING TO FLOOR DRAIN SHALL BE BY FSEC.
2. PROVIDE ISLAND SINK VENT PER DETAIL 3/P4.1 FOR CONNECTION TO FSE-187.
3. PROVIDE SHUTOFF, BALANCE, CHECK AND SHUTOFF VALVES ON HWC PIPING. SET BALANCE VALVE TO 0.5 GPM.
4. P.C. SHALL COORDINATE FLOOR SINK LOCATION WITH DISHWASHER DRAIN DISCHARGE LOCATION. P.C. SHALL ROUTE INDIRECT WASTE FROM DISHWAHSER TO FLOOR SINK.
5. FLOOR TROUGH PROVIDED BY FSEC, INSTALLED BY P.C.
6. REFER TO DISPOSER DETAIL ON FSM101 FOR PIPING DETAIL AND SCOPE OF WORK BETWEEN FSEC AND P.C.
7. PROVIDE EXPANSION JOINT EJ-5 PER 22 0516 FOR ANY SHW AND HWC CPVC OR PEX PIPING INSTALLED (TYP.2). LOCATE ANCHORS AT EACH END AND PROVIDE ALIGNMENT GUIDES AS RECOMMENDED BY MANUFACTURER OF PIPING. APPROXIMATELY 3" OF EXPANSION ANTICIPATED.
8. PROVIDE EXPANSION JOINT EJ-5 PER 22 0516 FOR ANY SHW AND HWC CPVC OR PEX PIPING INSTALLED (TYP.2). LOCATE ANCHORS AT EACH END AND PROVIDE ALIGNMENT GUIDES AS RECOMMENDED BY MANUFACTURER OF PIPING. APPROXIMATELY 4" OF EXPANSION ANTICIPATED.

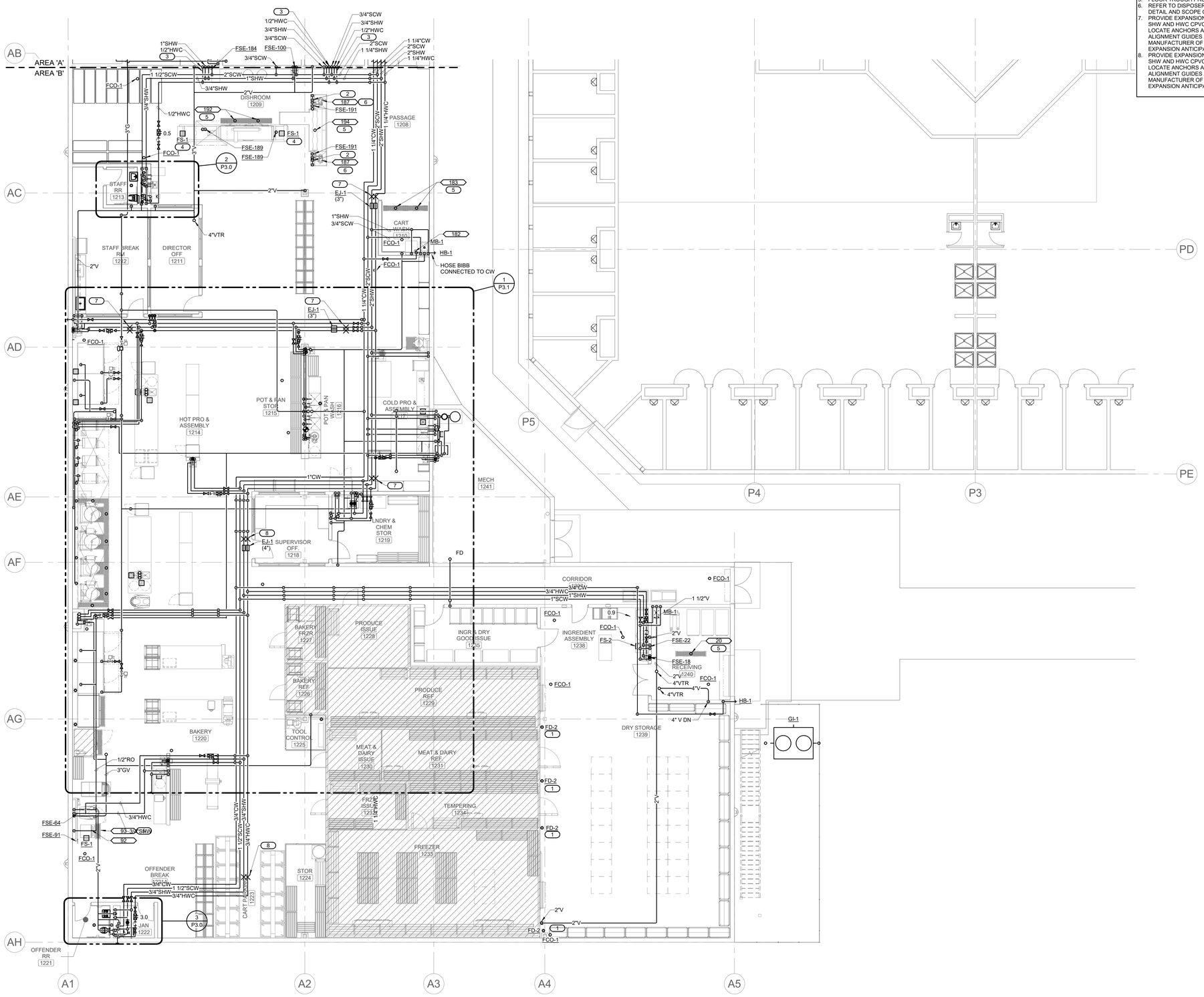

1 LEVEL 01 PLAN - AREA B - PLUMBING

1/8" = 1'-0"

NORTH

Farnsworth GROUP
14225 UNIVERSITY AVENUE, SUITE 110
WALKEE, IOWA 50263
(515) 225-3469 / info@f-w.com
www.f-w.com
Engineers | Architects | Surveyors | Scientists

RIPPE ASSOCIATES
FOODSERVICE DESIGN + CONSULTING

kpff

IMEG

Bishop Engineering

ISSUE:

#	DATE:	DESCRIPTION:

BID SET

PROJECT:

STATE OF IOWA - DEPARTMENT OF CORRECTIONS

CLARINDA CORRECTIONAL FACILITY - KITCHEN & LAUNDRY ADDITION

2000 N 16TH ST, CLARINDA, IA 51632

DATE:	02/09/2024
DESIGNED:	MIKMCC
DRAWN:	MIKMCC
REVIEWED:	DELLLE

SHEET TITLE:

LEVEL 01 PLAN - AREA B - PLUMBING

SHEET NUMBER:

P1.2

IMEG 2882 106TH STREET DES MOINES, IA 50322 P: 515.334.9906 F: 515.334.9908
www.imegcorp.com

IMEG CORP. RESERVES PROPRIETARY RIGHTS, INCLUDING COPYRIGHTS, TO THIS DRAWING AND THE DATA SHOWN THEREON. SAID DRAWING AND/OR DATA ARE THE EXCLUSIVE PROPERTY OF IMEG CORP. AND SHALL NOT BE USED OR REPRODUCED FOR ANY OTHER PROJECT WITHOUT THE EXPRESS WRITTEN APPROVAL AND PARTICIPATION OF IMEG CORP. ©2024 IMEG CORP.

0 1 2 3
REF. SCALE IN INCHES

PROJECT #01007688.00

PROJECT NO.: 0240202.00
RFB922300-02

2/2/2024 3:01:50 PM

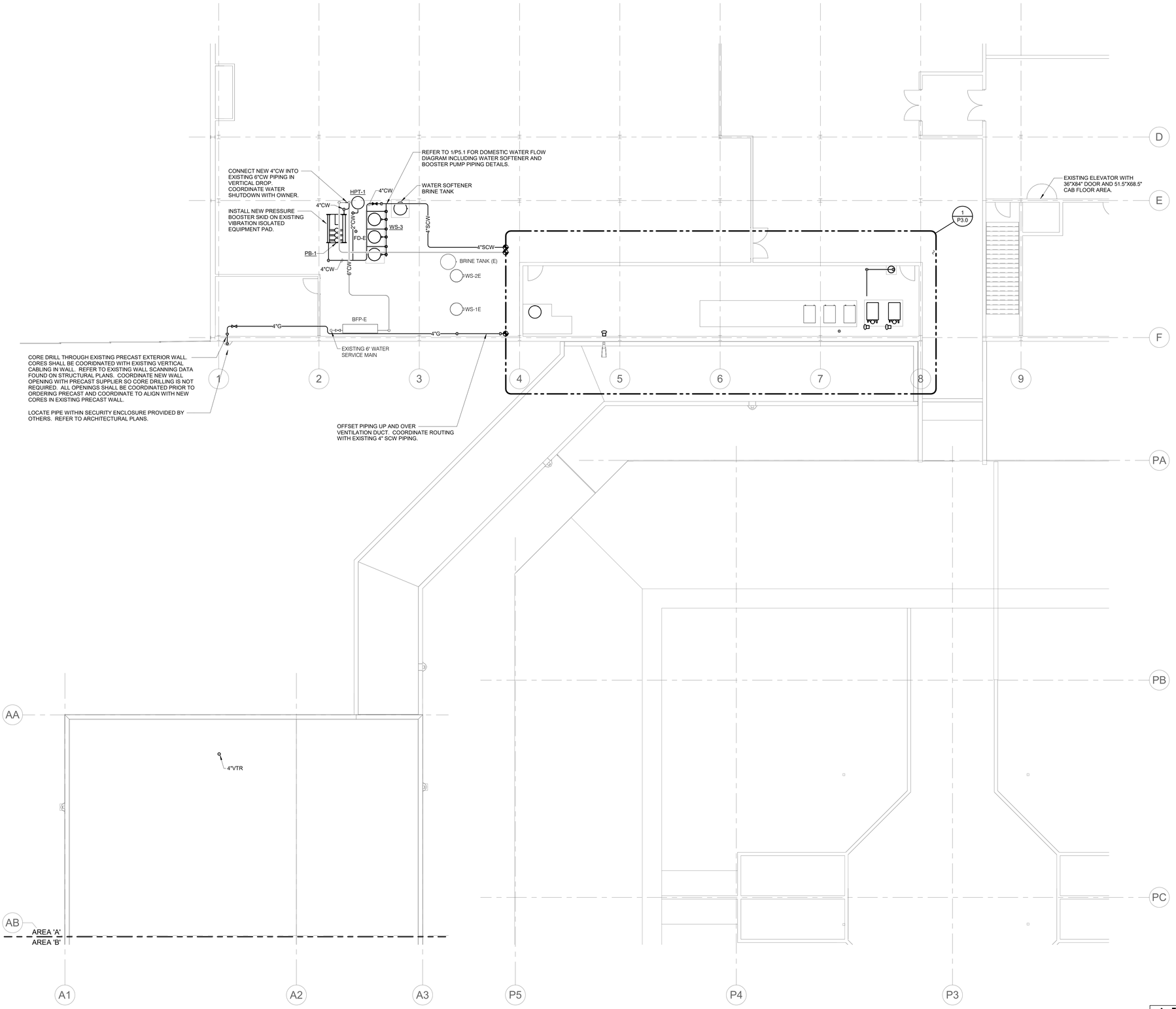

NORTH

1 LEVEL 02 PLAN - AREA A - PLUMBING

1/8" = 1'-0"

Farnsworth GROUP
14225 UNIVERSITY AVENUE, SUITE 110
WALKEE, IOWA 50263
(515) 225-3469 / info@f-w.com
www.f-w.com
Engineers | Architects | Surveyors | Scientists

RIPPE ASSOCIATES
FOODSERVICE DESIGN + CONSULTING

kpff

IMEG

Bishop Engineering

ISSUE:

#	DATE:	DESCRIPTION:

BID SET

PROJECT:

STATE OF IOWA - DEPARTMENT OF CORRECTIONS

CLARINDA CORRECTIONAL FACILITY - KITCHEN & LAUNDRY ADDITION

2000 N 16TH ST, CLARINDA, IA 51632

DATE:	02/09/2024
DESIGNED:	MIKMCC
DRAWN:	MIKMCC
REVIEWED:	DELLLE

SHEET TITLE:

LEVEL 02 PLAN - AREA A - PLUMBING

SHEET NUMBER:

P1.3

PROJECT NO.: 0240202.00
RFB922300-02

IMEG
2882 106TH STREET
DES MOINES, IA 50322
P: 515.334.9906 F: 515.334.9908
www.imegcorp.com

IMEG CORP. RESERVES PROPRIETARY RIGHTS, INCLUDING COPYRIGHTS, TO THIS DRAWING AND THE DATA SHOWN THEREON. SAID DRAWING AND/OR DATA ARE THE EXCLUSIVE PROPERTY OF IMEG CORP. AND SHALL NOT BE USED OR REPRODUCED FOR ANY OTHER PROJECT WITHOUT THE EXPRESS WRITTEN APPROVAL AND PARTICIPATION OF IMEG CORP. ©2024 IMEG CORP.

0 1 2 3
REF. SCALE IN INCHES
PROJECT #21007688.00

2/2/2024 1:01:54 PM

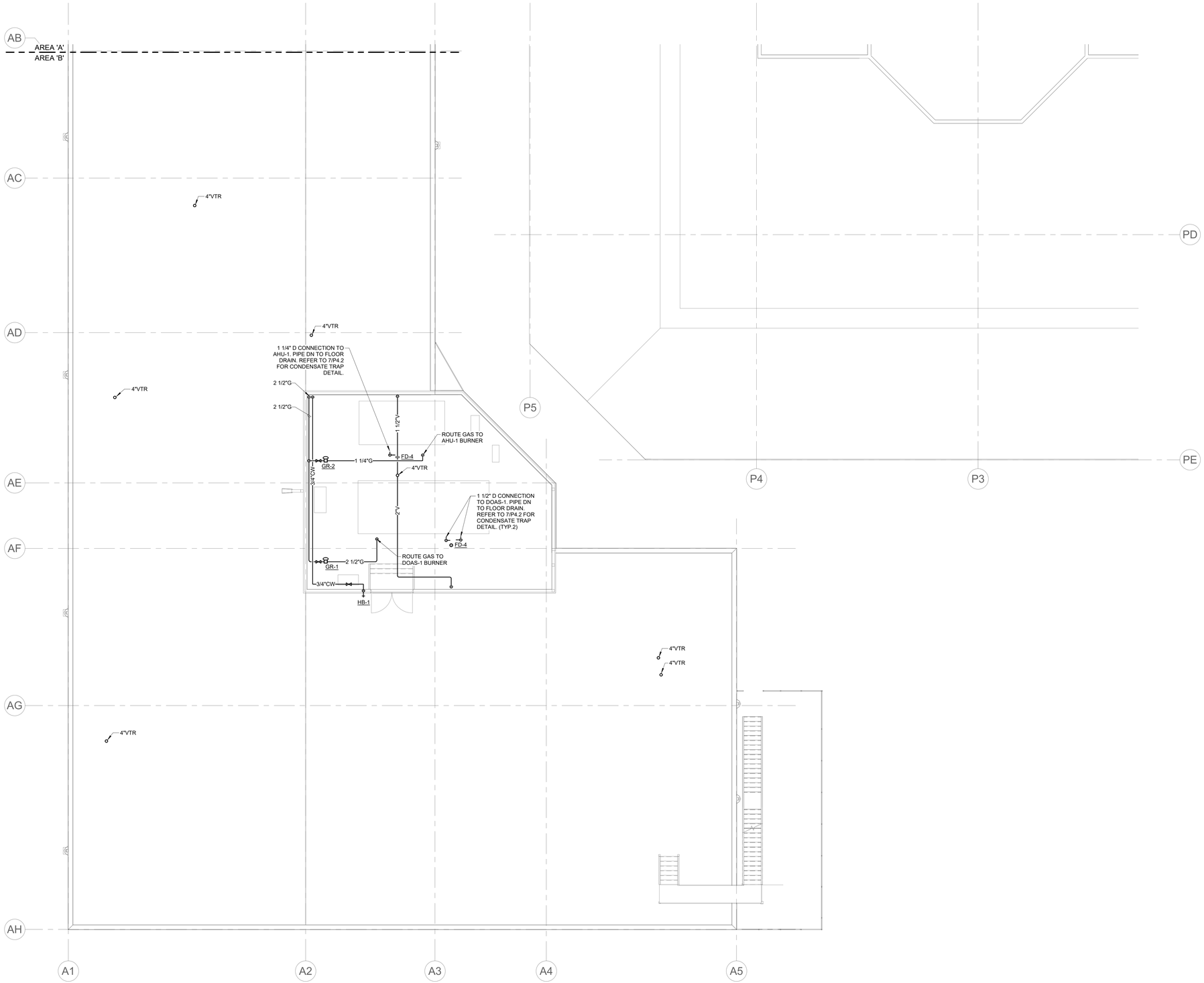

NORTH

1 **LEVEL 02 PLAN - AREA B - PLUMBING**
1/8" = 1'-0"

Farnsworth GROUP
14225 UNIVERSITY AVENUE, SUITE 110
WALKEE, IOWA 50263
(515) 225-3469 / info@f-w.com
www.f-w.com
Engineers | Architects | Surveyors | Scientists

RIPPE ASSOCIATES
FOODSERVICE DESIGN + CONSULTING

kpff

IMEG

Bishop Engineering

ISSUE:

#	DATE:	DESCRIPTION:

BID SET

PROJECT:
STATE OF IOWA - DEPARTMENT OF CORRECTIONS

CLARINDA CORRECTIONAL FACILITY - KITCHEN & LAUNDRY ADDITION

2000 N 16TH ST, CLARINDA, IA 51632

DATE:	02/09/2024
DESIGNED:	MIKMCC
DRAWN:	MIKMCC
REVIEWED:	DELLLE

SHEET TITLE:

LEVEL 02 PLAN - AREA B - PLUMBING

SHEET NUMBER:

P1.4

IMEG
2882 106TH STREET
DES MOINES, IA 50322
P: 515.334.9906 F: 515.334.9908
www.imegcorp.com

IMEG CORP. RESERVES PROPRIETARY RIGHTS, INCLUDING COPYRIGHTS, TO THIS DRAWING AND THE DATA SHOWN THEREON. SAID DRAWING AND/OR DATA ARE THE EXCLUSIVE PROPERTY OF IMEG CORP. AND SHALL NOT BE USED OR REPRODUCED FOR ANY OTHER PROJECT WITHOUT THE EXPRESS WRITTEN APPROVAL AND PARTICIPATION OF IMEG CORP. ©2024 IMEG CORP.

0 1 2 3
REF. SCALE IN INCHES
PROJECT #21007688.00

PROJECT NO.: 0240202.00
RFB922300-02

2/2/2024 1:02:07 PM

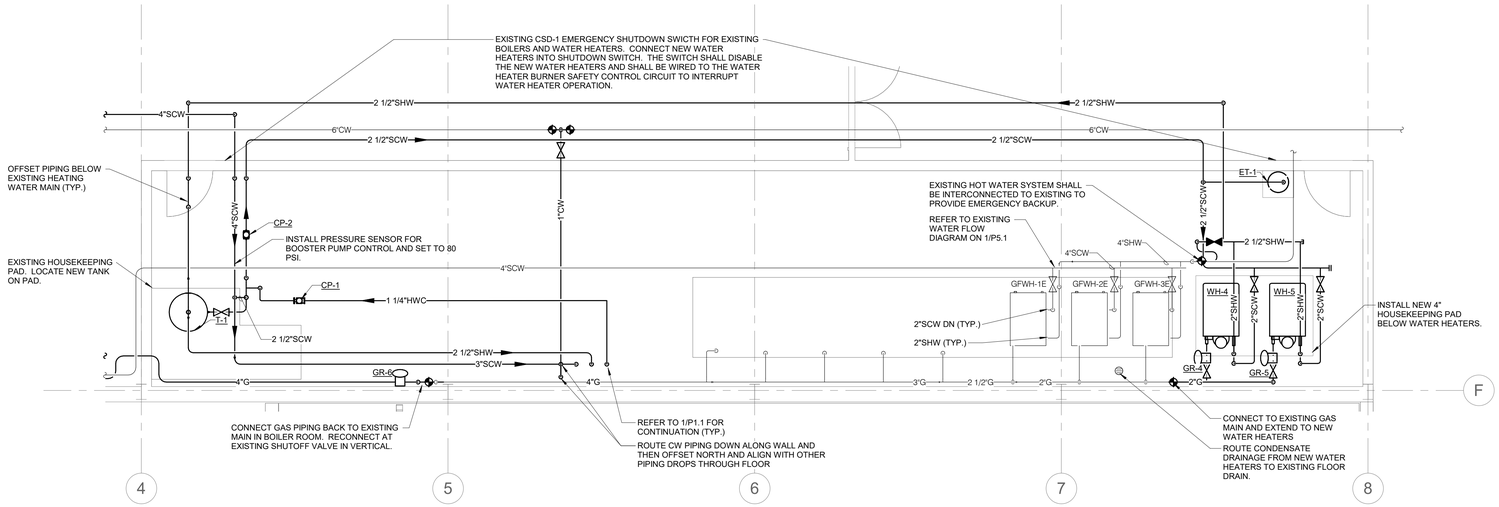

1 LEVEL 02 PLAN - AREA A - PLUMBING - EXISTING BOILER/WATER HEATER ROOM

1/4" = 1'-0"

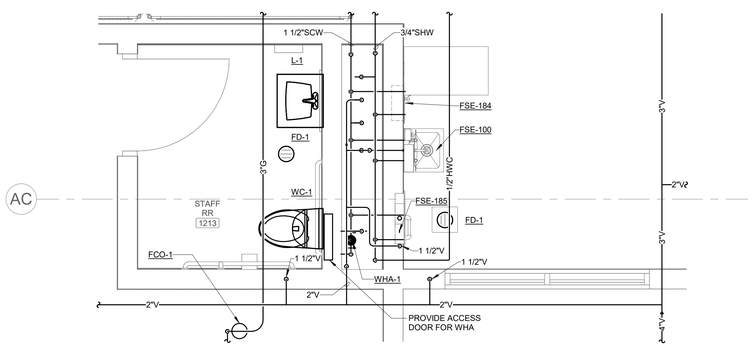

2 ENLARGED STAFF RR PLAN - AREA B - PLUMBING

1/2" = 1'-0"

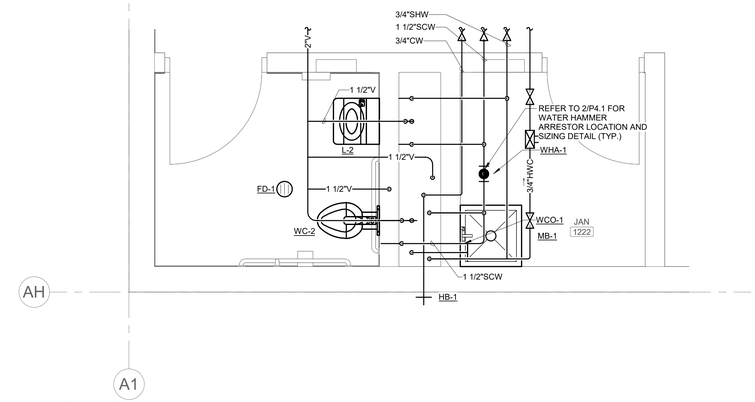

3 ENLARGED OFFENDER RR/JC PLAN - AREA B - PLUMBING

1/2" = 1'-0"

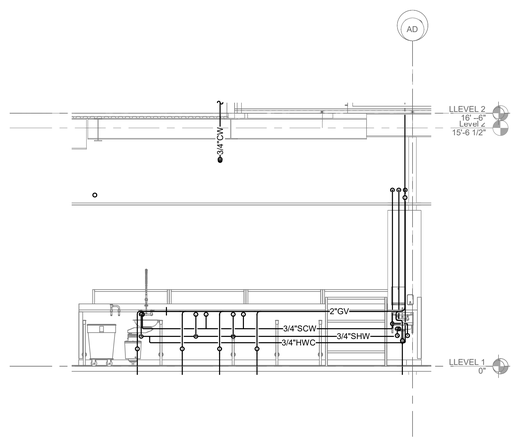

4 POT AND PAN WASHING SECTION

1/4" = 1'-0"

Farnsworth GROUP
14225 UNIVERSITY AVENUE, SUITE 110
WALKEE, IOWA 50263
(515) 225-3469 / info@f-w.com
www.f-w.com
Engineers | Architects | Surveyors | Scientists
RIPPE ASSOCIATES
FOODSERVICE DESIGN + CONSULTING
kpff
IMEG
Bishop Engineering

ISSUE:

#	DATE:	DESCRIPTION:

BID SET

PROJECT:

STATE OF IOWA - DEPARTMENT OF CORRECTIONS

CLARINDA CORRECTIONAL FACILITY - KITCHEN & LAUNDRY ADDITION

2000 N 16TH ST, CLARINDA, IA 51632

DATE:	02/09/2024
DESIGNED:	MIKMCC
DRAWN:	MIKMCC
REVIEWED:	DELLLE

SHEET TITLE:

ENLARGED PLAN - PLUMBING

SHEET NUMBER:

P3.0

IMEG
2882 106TH STREET
DES MOINES, IA 50322
P: 515.334.9906 F: 515.334.9908
www.imegcorp.com

IMEG CORP. RESERVES PROPRIETARY RIGHTS, INCLUDING COPYRIGHTS, TO THIS DRAWING AND THE DATA SHOWN THEREON. SAID DRAWING AND/OR DATA ARE THE EXCLUSIVE PROPERTY OF IMEG CORP. AND SHALL NOT BE USED OR REPRODUCED FOR ANY OTHER PROJECT WITHOUT THE EXPRESS WRITTEN APPROVAL AND PARTICIPATION OF IMEG CORP. ©2024 IMEG CORP.

0 1 2 3
REF. SCALE IN INCHES
PROJECT #21007688.00

PROJECT NO.: 0240202.00
RFB922300-02

2/2/2024 3:02:09 PM

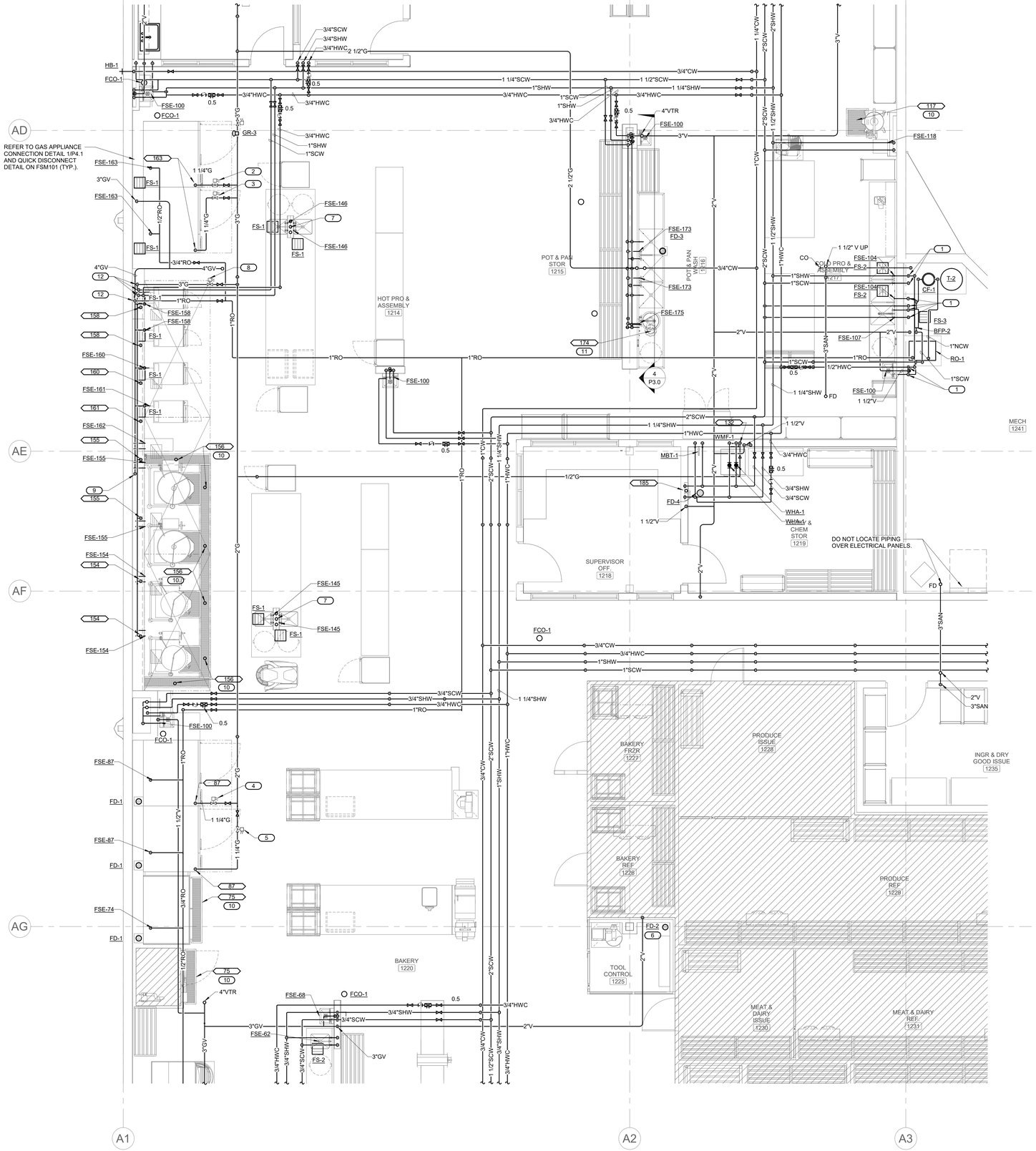

1 LEVEL 01 PLAN - AREA B - PLUMBING - MAIN KITCHEN AREAS

1/4" = 1'-0"

NORTH

KEYNOTES: #

1. ROUTE PIPING EXPOSED IN MECHANICAL ROOM AND STUB THROUGH CMU TO FIXTURE.
2. INSTALL GAS SHUT-OFF VALVE FURNISHED BY FSEC AS PART OF HOOD FIRE PROTECTION SYSTEM (FSE #169) SERVING RACK OVERN (FSE # 163).
3. INSTALL GAS SHUT-OFF VALVE FURNISHED BY FSEC AS PART OF HOOD FIRE PROTECTION SYSTEM (FSE #170) SERVING RACK OVERN (FSE # 163).
4. INSTALL GAS SHUT-OFF VALVE FURNISHED BY FSEC AS PART OF HOOD FIRE PROTECTION SYSTEM (FSE #89) SERVING RACK OVEN (FSE #87).
5. INSTALL GAS SHUT-OFF VALVE FURNISHED BY FSEC AS PART OF HOOD FIRE PROTECTION SYSTEM (FSE #90) SERVING RACK OVEN (FSE #87).
6. FLOOR DRAIN SHALL RECEIVE REFRIGERATION SYSTEM COIL CONDENSATE. ROUTING OF CONDENSATE PIPING TO FLOOR DRAIN SHALL BE BY FSEC.
7. ROUTE PIPING UP TO ISLAND FIXTURES. REFER TO 3/P4.2.
8. INSTALL GAS SHUT-OFF VALVE FURNISHED BY FSEC AS PART OF HOOD FIRE PROTECTION SYSTEM (FSE #151) SERVING MAIN GREASE EXHAUST HOOD (FSE #148).
9. 4" GV CIRCIT VENT SERVING FLOOR SINKS AND TROUGHS. COORDINATE ROUTING OF 4" GV WITH FSEC AND UDS CONFIGURATION. 4" GV SHALL ROUTE HORIZONTALLY IN UDS AND THEN RISE AT NORTH END WITH ALL UDS CONNECTIONS.
10. FLOOR TROUGH PROVIDED BY FSEC, INSTALLED BY P.C.
11. REFER TO DISPOSER DETAIL ON FSM101 FOR PIPING DETAIL AND SCOPE OF WORK BETWEEN FSEC AND P.C.
12. P.C. TO ROUTE PIPING TO UTILITY DISTRIBUTION SYSTEM (UDS) PROVIDED BY FSEC. PIPING ALONG WALL BENEATH HOOD WILL BE PART OF THE UDS. THE UDS WILL HAVE STUB OUTS FOR EACH PIECE OF EQUIPMENT. P.C. SHALL CONNECT TO STUB OUTS AND EXTEND TO EQUIPMENT. ROUGH-IN SIZES FOR UDS SHALL BE 2 1/2"G, 1"SCW, 1"SHW AND 1"RO.

Farnsworth GROUP
14225 UNIVERSITY AVENUE, SUITE 110
WALKEE, IOWA 50263
(515) 225-3469 / info@f-w.com
www.f-w.com
Engineers | Architects | Surveyors | Scientists

RIPPE ASSOCIATES
FOODSERVICE DESIGN + CONSULTING

kpff

IMEG

Bishop Engineering

ISSUE:

#	DATE:	DESCRIPTION:

BID SET

PROJECT:

STATE OF IOWA - DEPARTMENT OF CORRECTIONS

CLARINDA CORRECTIONAL FACILITY - KITCHEN & LAUNDRY ADDITION

2000 N 16TH ST, CLARINDA, IA 51632

DATE:	02/09/2024
DESIGNED:	MIKMCC
DRAWN:	MIKMCC
REVIEWED:	DELLLE

SHEET TITLE:

ENLARGED PLAN - PLUMBING

SHEET NUMBER:

P3.1

PROJECT NO.: 0240202.00
RFB922300-02

IMEG 2892 10TH STREET DES MOINES, IA 50322 P: 515.334.9908 F: 515.334.9908
www.imegcorp.com

IMEG CORP. RESERVES PROPRIETARY RIGHTS, INCLUDING COPYRIGHTS, TO THIS DRAWING AND THE DATA SHOWN THEREON. SAID DRAWING AND/OR DATA ARE THE EXCLUSIVE PROPERTY OF IMEG CORP. AND SHALL NOT BE USED OR REPRODUCED FOR ANY OTHER PROJECT WITHOUT THE EXPRESS WRITTEN APPROVAL AND PARTICIPATION OF IMEG CORP. ©2024 IMEG CORP.

0 1 2 3
REF. SCALE IN INCHES
PROJECT #210207668.00

2/20/2024 3:10:19 PM

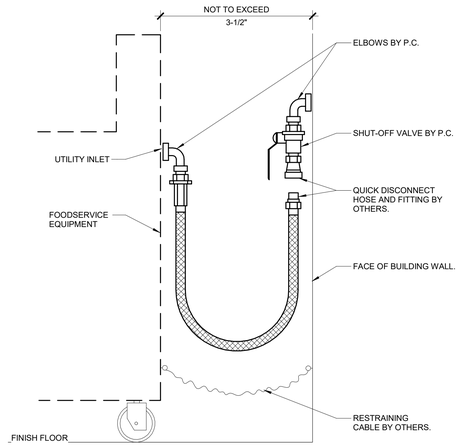

1 GAS APPLIANCE CONNECTION DETAIL

NO SCALE

NOTES:

1. VERIFY UTILITY INLET LOCATION ON KITCHEN APPLIANCE AND EXTEND PIPING AS REQUIRED TO ABOVE CONFIGURATION.
2. INSTALL GAS PRESSURE REGULATOR(PROVIDE BY OTHERS) DOWNSTREAM OF SHUT-OFF VALVE IF REQUIRED BY MANUFACTURER. PIPE GAS VENTS TO EXTERIOR.

PROVIDE WATER HAMMER ARRESTER (WHA-#) AT PLUMBING FIXTURES AND QUICK CLOSING VALVES AS INDICATED ON DRAWINGS AND AS RECOMMENDED BY STANDARD PDI-WH201. REFER TO PLUMBING MATERIAL LIST FOR WATER HAMMER ARRESTER DESCRIPTION.

SINGLE / DOUBLE FIXTURE

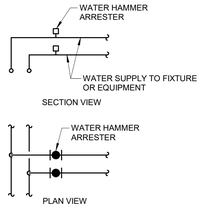

PDI SIZE	PIPE SIZE	FIXTURE UNIT LOAD
A	1/2"	1-11
B	3/4"	12-32
C	1"	33-60
D	1-1/4"	61-113
E	1-1/2"	114-154
F	2"	155-330

INSTALL WHA'S PER PDI STANDARDS AND MANUFACTURER'S INSTRUCTIONS. INSTALL IN HORIZONTAL OR VERTICAL POSITION, BUT NEVER UPSIDE DOWN. INSTALL IN LINE WITH WATER FLOW DIRECTION IF POSSIBLE. SIZE THE WHA AS SHOWN PER THE TABLES ABOVE. PROVIDE ACCESSIBILITY TO WHA WITH ACCESS PANEL OR INSTALL ABOVE ACCESSIBLE CEILING.

MULTIPLE FIXTURES

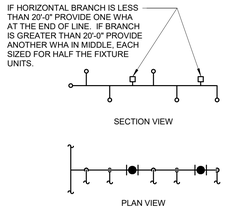

FIXTURE UNIT CALCULATION		
FIXTURE	COLD	HOT
WATER CLOSET (F.V.)	10	--
WATER CLOSET (TANK)	5	--
URINAL	5	--
LAVATORY	1.5	1.5
JANITOR'S SINK	3	3
SHOWER/BATHTUB	2	3
DRINKING FOUNTAIN	2	-
KITCHEN SINK	2	2
ICE MAKER / BEVERAGE	1	-

2 WATER HAMMER ARRESTER LOCATION DETAIL

NO SCALE

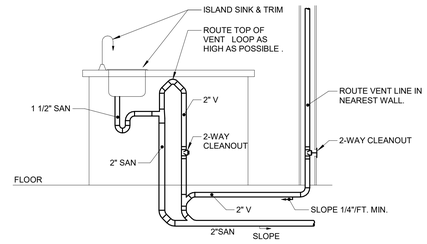

3 ISLAND SINK VENT DETAIL

NO SCALE

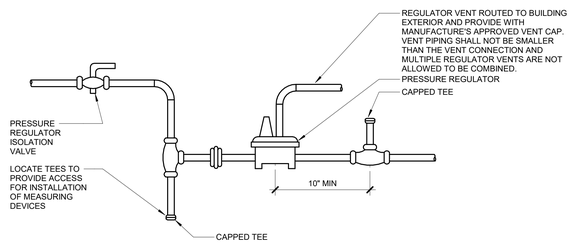

4 GAS PRESSURE REGULATOR DETAIL

NO SCALE

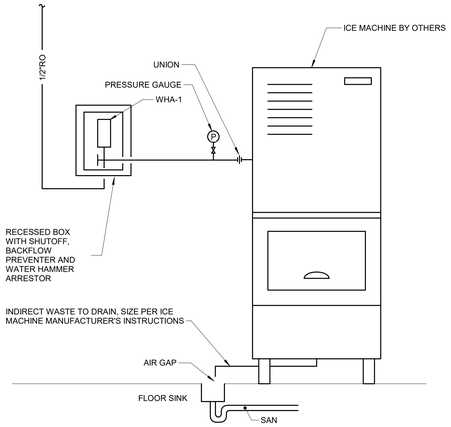

5 ICE MACHINE DETAIL

NO SCALE

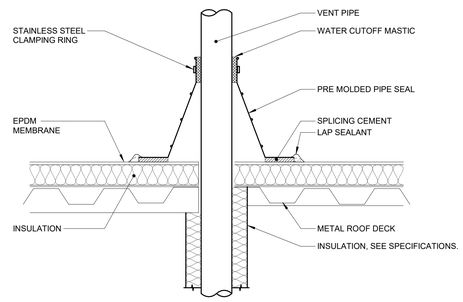

6 VENT PIPE FLASHING

NO SCALE

NOTES:

1. VENT PIPE SHALL BE A MINIMUM OF 3" DIAMETER UNLESS NOTED LARGER ON FLOOR PLANS. INCREASERS, IF REQUIRED TO TRANSITION TO THE LARGER VTR SIZE, MUST BE INSTALLED AT LEAST 12 INCHES BELOW THE THERMAL ENVELOPE OF THE BUILDING.

Farnsworth GROUP
14225 UNIVERSITY AVENUE, SUITE 110
WALKEE, IOWA 50263
(515) 225-3469 / info@f-w.com
www.f-w.com
Engineers | Architects | Surveyors | Scientists

RIPPE ASSOCIATES
FOODSERVICE DESIGN + CONSULTING

kpff

IMEG

Bishop Engineering

ISSUE:

#	DATE:	DESCRIPTION:

BID SET

PROJECT:

STATE OF IOWA - DEPARTMENT OF CORRECTIONS

CLARINDA CORRECTIONAL FACILITY - KITCHEN & LAUNDRY ADDITION

2000 N 16TH ST, CLARINDA, IA 51632

DATE:	02/09/2024
DESIGNED:	MIKMCC
DRAWN:	MIKMCC
REVIEWED:	DELLLE

SHEET TITLE:

PLUMBING DETAILS

SHEET NUMBER:

P4.1

PROJECT NO.: 0240202.00

RFB922300-02

IMEG
2892 10ETH STREET
DES MOINES, IA 50322
P: 515.334.9906 F: 515.334.9908
www.imegcorp.com

IMEG CORP. RESERVES PROPRIETARY RIGHTS, INCLUDING COPYRIGHTS, TO THIS DRAWING AND THE DATA SHOWN THEREON. SAID DRAWING AND/OR DATA ARE THE EXCLUSIVE PROPERTY OF IMEG CORP. AND SHALL NOT BE USED OR REPRODUCED FOR ANY OTHER PROJECT WITHOUT THE EXPRESS WRITTEN APPROVAL AND PARTICIPATION OF IMEG CORP. ©2024 IMEG CORP.

0 1 2 3
REF. SCALE IN INCHES
PROJECT #210070668.00

2/2/2024 3:02:21 PM

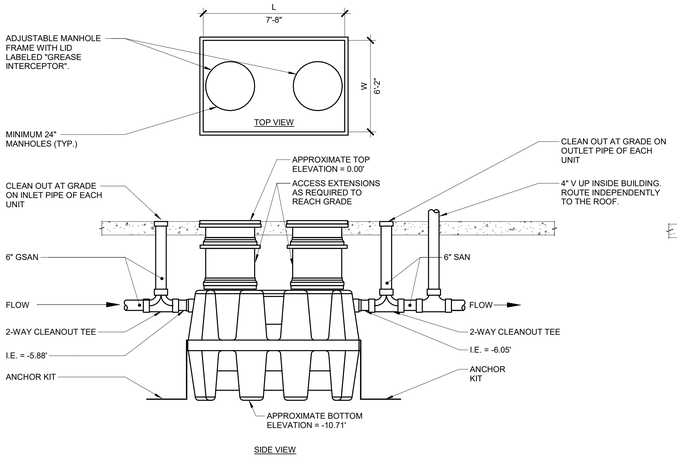

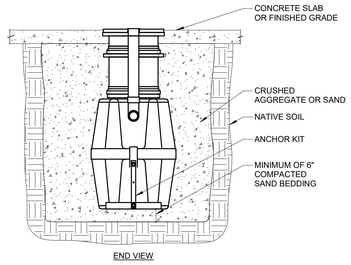

1 GREASE INTERCEPTOR DETAIL (EXTERIOR)

NO SCALE

NOTES:

1. REFER TO MANUFACTURERS RECOMMENDATIONS FOR SPECIFIC VENTING REQUIREMENTS.

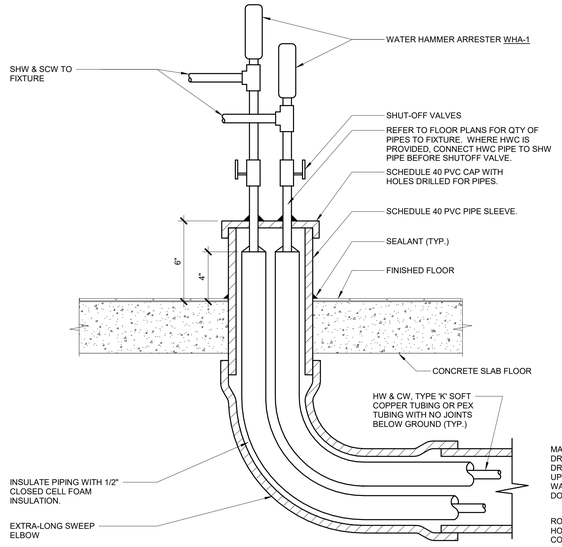

2 UNDERGROUND TUBING TO ISLAND FIXTURES

NO SCALE

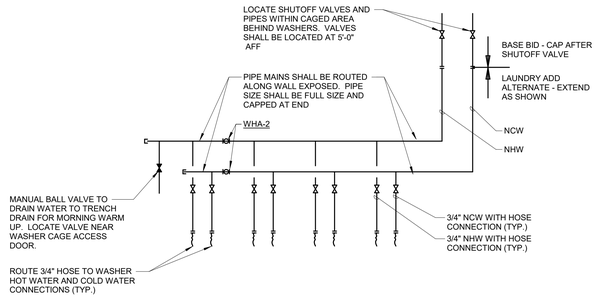

3 WASHING MACHINE PIPING DETAIL

NO SCALE

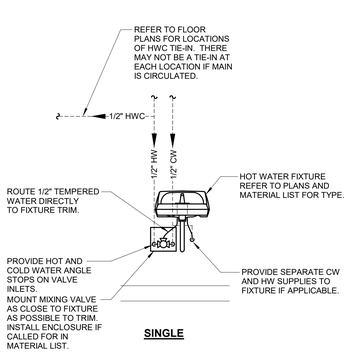

LAVATORY SHOWN; DETAIL IS APPLICABLE TO ALL HW FIXTURES AND DEVICES (E.G. LAVATORIES, SINKS, MOP SINKS, LAUNDRY TUBS, ETC.). REFER TO ROUGH-IN SCHEDULES FOR PIPE SIZES.

4 FIXTURE HOT WATER ROUTING DETAIL

NO SCALE

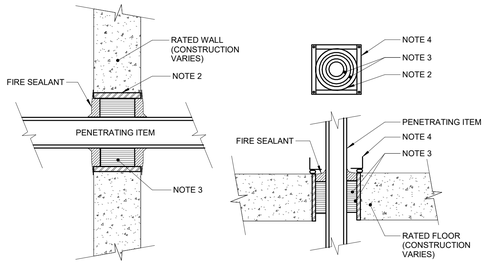

NOTES:

1. THIS GENERAL DETAIL APPLIES TO ALL ITEMS PENETRATING FIRE RATED WALLS OR FLOORS. THE INTENT IS TO MAINTAIN THE FIRE RATING AND TO ALLOW LONGITUDINAL MOVEMENT. REFER TO SPECIFICATION SECTION 07 84 00 FOR SELECTION OF THROUGH PENETRATION FIRE STOPPING.
2. SCHEDULE 5 PIPE SLEEVE EMBEDDED IN WALL OR FLOOR, OR SMOOTH CORE DRILL. EACH CONTRACTOR FURNISHES SLEEVE TO DIVISION 3 CONTRACTOR, COORDINATES SLEEVE LOCATIONS AND DEBURS SLEEVE. DIVISION 3 CONTRACTOR BUILDS SLEEVE INTO WALL OR FLOOR ALLOWING NO GAP AROUND SLEEVE. IF SLEEVE IS NOT PROVIDED WHEN WALL OR FLOOR IS BUILT, CONTRACTOR SHALL INSTALL SLEEVE. SLEEVE SIZE SHALL ALLOW ANNULAR SPACE REQUIRED BY THE SELECTED FIRE STOP SYSTEM.
3. INSTALL BACKING MATERIAL, SUCH AS MINERAL WOOL SAFING, AS REQUIRED FOR FIRE STOP SYSTEM. INSTALL IN ACCORDANCE WITH FIRE STOP SYSTEM APPLICATION LISTING. SECURE TO WALL OR FLOOR TO ALLOW LONGITUDINAL MOVEMENT OF PENETRATING ITEM WITHOUT MOVEMENT OF FIRE BARRIER.
4. WATERTIGHT WELDED 1"x1" 20 GAUGE MINIMUM GALVANIZED SHEET METAL ANGLE FRAME, BY CONTRACTOR IN EQUIPMENT ROOMS FOR WATER STOP. PLACE A BEAD OF WATERPROOF SEALANT BETWEEN FLOOR AND BOTTOM OF ANGLE FRAME. SECURE TO FLOOR WITH MASONRY ANCHORS IN CORNERS AND ON 12" MAXIMUM CENTERS. MULTIPLE PENETRATING ITEMS MAY BE ENCLOSED IN ONE FRAME.

5 FLOOR/WALL PENETRATION - RATED FIRE BARRIER

NO SCALE

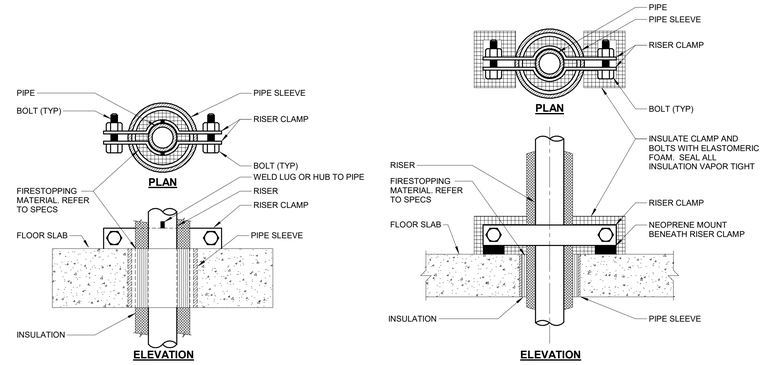

INSULATED HOT PIPE RISER SUPPORT

INSULATED COLD PIPE RISER SUPPORT

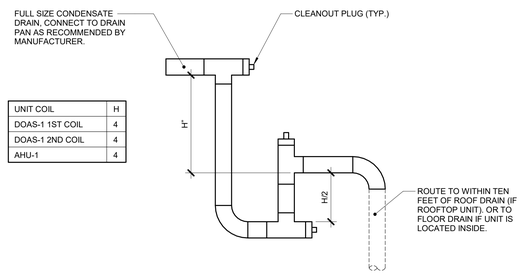

UNIT COIL	H
DOAS-1 1ST COIL	4
DOAS-1 2ND COIL	4
AHU-1	4

7 CONDENSATE TRAP DETAIL (DRAW-THROUGH)

NO SCALE

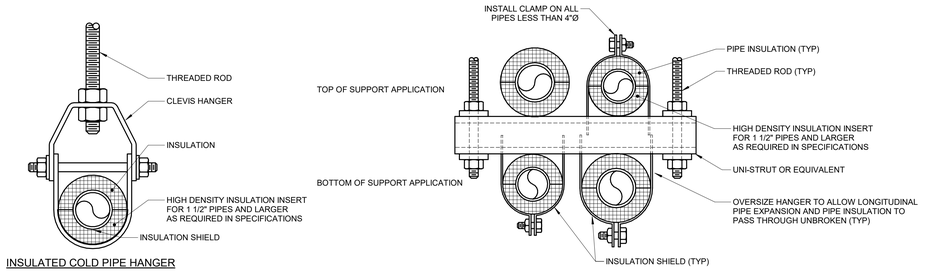

NOTES:

1. REFER TO SPECIFICATION SECTION 22 05 29-PLUMBING.

6 PIPE - HANGERS AND SUPPORTS

NO SCALE

Farnsworth GROUP
14225 UNIVERSITY AVENUE, SUITE 110
WALKEE, IOWA 50263
(515) 225-3469 / info@f-w.com
www.f-w.com
Engineers | Architects | Surveyors | Scientists
RIPPE ASSOCIATES
FOODSERVICE DESIGN + CONSULTING
kpff
IMEG
Bishop Engineering

ISSUE:

#	DATE:	DESCRIPTION:

BID SET

PROJECT:

STATE OF IOWA - DEPARTMENT OF CORRECTIONS

CLARINDA CORRECTIONAL FACILITY - KITCHEN & LAUNDRY ADDITION

2000 N 16TH ST, CLARINDA, IA 51632

DATE:	02/09/2024
DESIGNED:	MIKMCC
DRAWN:	MIKMCC
REVIEWED:	DELLLE

SHEET TITLE:

PLUMBING DETAILS

SHEET NUMBER:

P4.2

PROJECT NO.: 0240202.00
RFB922300-02

IMEG
2892 10ETH STREET
DES MOINES, IA 50322
P: 515.334.9906 F: 515.334.9908
www.imegcorp.com

IMEG CORP. RESERVES PROPRIETARY RIGHTS, INCLUDING COPYRIGHTS, TO THIS DRAWING AND THE DATA SHOWN THEREON. SAID DRAWING AND/OR DATA ARE THE EXCLUSIVE PROPERTY OF IMEG CORP. AND SHALL NOT BE USED OR REPRODUCED FOR ANY OTHER PROJECT WITHOUT THE EXPRESS WRITTEN APPROVAL AND PARTICIPATION OF IMEG CORP. ©2024 IMEG CORP.

0 1 2 3
REF. SCALE IN INCHES
PROJECT #21007688.00

2/2/2024 3:02:23 PM

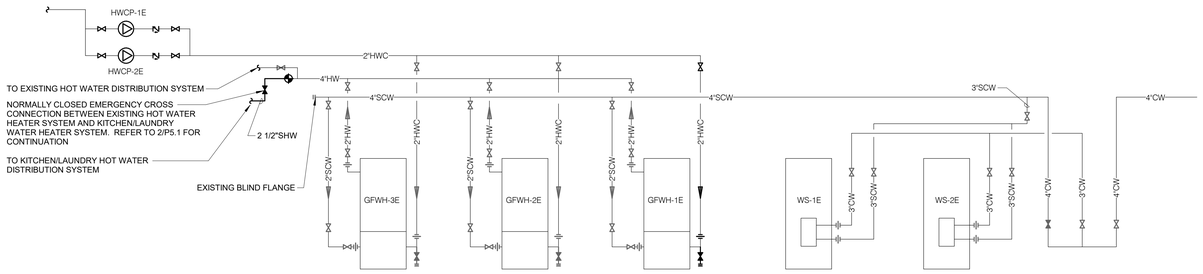

1 EXISTING WATER FLOW DIAGRAM

NO SCALE

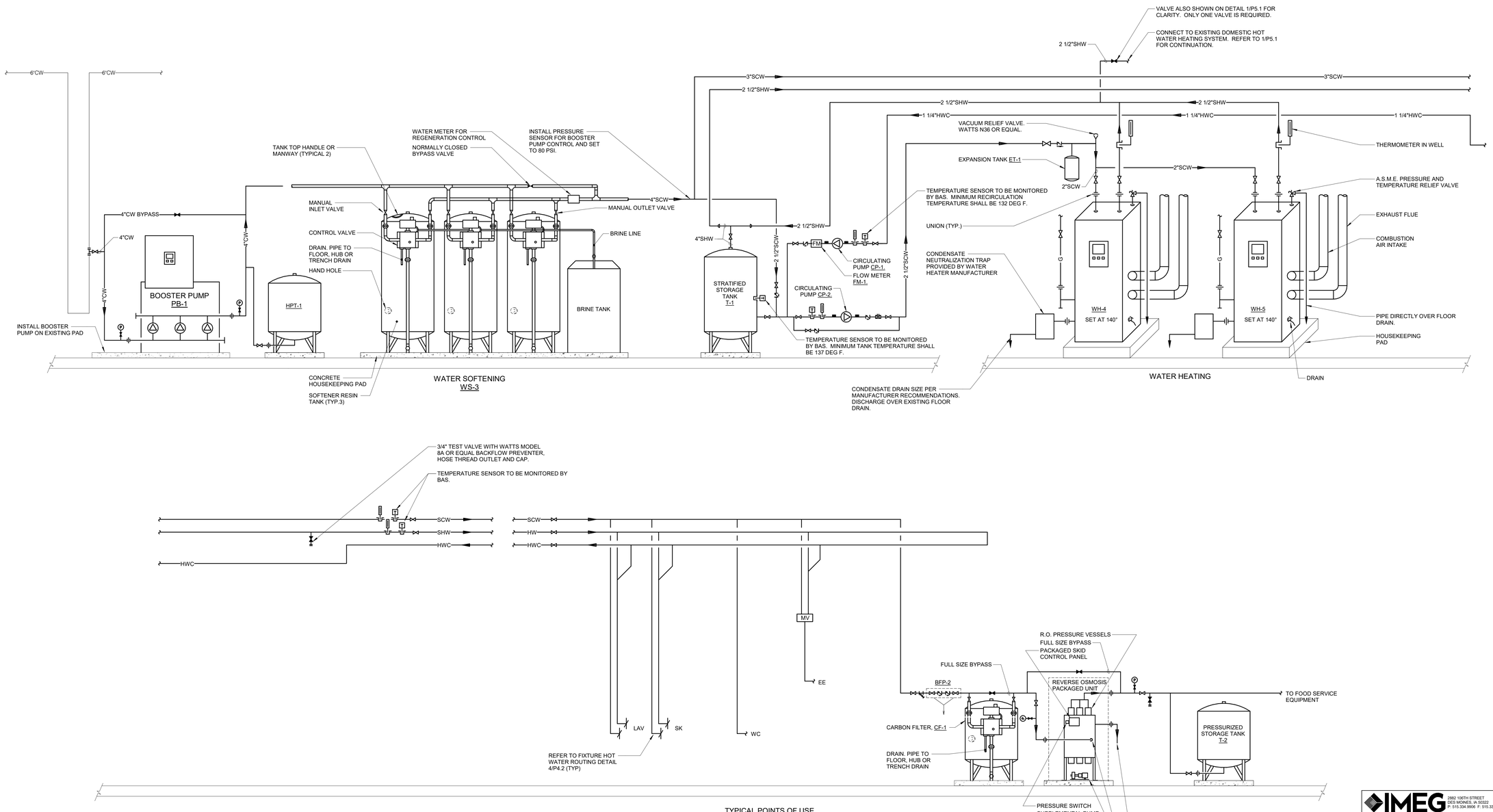

2 DOMESTIC WATER FLOW DIAGRAM

NO SCALE

Farnsworth GROUP
14225 UNIVERSITY AVENUE, SUITE 110
WALKEE, IOWA 50263
(515) 225-3469 / info@f-w.com
www.f-w.com
Engineers | Architects | Surveyors | Scientists
RIPPE ASSOCIATES
FOODSERVICE DESIGN + CONSULTING
kpff
IMEG
Bishop Engineering

ISSUE:

#	DATE:	DESCRIPTION:

BID SET

PROJECT:

STATE OF IOWA - DEPARTMENT OF CORRECTIONS

CLARINDA CORRECTIONAL FACILITY - KITCHEN & LAUNDRY ADDITION

2000 N 16TH ST, CLARINDA, IA 51632

DATE:	02/09/2024
DESIGNED:	MIKMCC
DRAWN:	MIKMCC
REVIEWED:	DELLLE

SHEET TITLE:

PLUMBING DIAGRAMS

SHEET NUMBER:

P5.1

PROJECT NO.: 0240202.00
RFB922300-02

IMEG
2882 106TH STREET
DES MOINES, IA 50322
P: 515.334.9906 F: 515.334.9908
www.imegcorp.com

IMEG CORP. RESERVES PROPRIETARY RIGHTS, INCLUDING COPYRIGHTS, TO THIS DRAWING AND THE DATA SHOWN THEREON. SAID DRAWING AND/OR DATA ARE THE EXCLUSIVE PROPERTY OF IMEG CORP. AND SHALL NOT BE USED OR REPRODUCED FOR ANY OTHER PROJECT WITHOUT THE EXPRESS WRITTEN APPROVAL AND PARTICIPATION OF IMEG CORP. ©2024 IMEG CORP.

0 1 2 3
REF. SCALE IN INCHES
PROJECT #210070B8.00

2/20/2024 3:02:25 PM

PLUMBING MATERIAL LIST

TAG NAME	DESCRIPTION	MANUFACTURER AND MODEL
BFP-1	BACK FLOW PREVENTER - REDUCED PRESSURE ZONE, LEAD FREE BRONZE CONSTRUCTION, 2", NON-CORROSIVE INTERNAL PARTS, STAINLESS STEEL SPRINGS, DIFFERENTIAL PRESSURE RELIEF VALVE BETWEEN SPRING-LOADED CHECK VALVES, BALL STYLE SHUT-OFF VALVES ON INLET AND OUTLET OF UNIT, AIR GAP DRAIN FITTING, TEST PORTS WITH SHUT-OFF VALVES, RATED FOR 175 PSI AT 33°F TO 140°F, 15 PSI (MAXIMUM) PRESSURE DROP AT 10 FPS, FACTORY TESTED, ALL PARTS TO BE SERVICEABLE WITHOUT REMOVING UNIT FROM LINE, APPROVED BY USC FCCC & HR, AWWA C511-92, ASSE 1013, IAPMO AND SBCCI LISTED. MOUNT WITHIN 60" OF FINISHED FLOOR. ROUTE DRAIN PIPE FROM AIR GAP FITTING TO FLOOR DRAIN. PROVIDE AND INSTALL BRONZE OR EPOXY COATED STRAINER UPSTREAM OF EACH UNIT AND ADDITIONAL VALVE UPSTREAM OF EACH STRAINER. FLOW PRESSURE DROP CURVES SHALL BE SUBMITTED.	APOLLO (RPLF4A), WATTS (LF919), WILKINS (975XL2)
BFP-2	BACK FLOW PREVENTER - REDUCED PRESSURE ZONE, LEAD FREE BRONZE CONSTRUCTION, 1", NON-CORROSIVE INTERNAL PARTS, STAINLESS STEEL SPRINGS, DIFFERENTIAL PRESSURE RELIEF VALVE BETWEEN SPRING-LOADED CHECK VALVES, BALL STYLE SHUT-OFF VALVES ON INLET AND OUTLET OF UNIT, AIR GAP DRAIN FITTING, TEST PORTS WITH SHUT-OFF VALVES, RATED FOR 175 PSI AT 33°F TO 140°F, 15 PSI (MAXIMUM) PRESSURE DROP AT 10 FPS, FACTORY TESTED, ALL PARTS TO BE SERVICEABLE WITHOUT REMOVING UNIT FROM LINE, APPROVED BY USC FCCC & HR, AWWA C511-92, ASSE 1013, IAPMO AND SBCCI LISTED. MOUNT WITHIN 60" OF FINISHED FLOOR. ROUTE DRAIN PIPE FROM AIR GAP FITTING TO FLOOR DRAIN. PROVIDE AND INSTALL BRONZE OR EPOXY COATED STRAINER UPSTREAM OF EACH UNIT AND ADDITIONAL VALVE UPSTREAM OF EACH STRAINER. FLOW PRESSURE DROP CURVES SHALL BE SUBMITTED.	APOLLO (RPLF4A), WATTS (LF919), WILKINS (975XL2)
BFP-3	VACUUM BREAKER - ATMOSPHERIC, LEAD FREE BRASS CONSTRUCTION, CHROME-PLATED FINISH, 1/2" I.P.S. FEMALE INLET AND OUTLET, FULL SIZE ORIFICE, ASSE 1001 AND ANSI A112.1.1 COMPLIANT. PROVIDE ESCUTCHEONS AND WALL BRACKETS AS REQUIRED. INSTALL AT 6" MINIMUM ABOVE FLOOD RIM OF FIXTURE.	WATTS (LF288AC), CHICAGO FAUCET (892-ABCP), MIFAB (ASVB.50)
BFP-5	BACK FLOW PREVENTER - PRESSURE VACUUM BREAKER, ANTI-SIPHON, SPILL RESISTANT, COPPER SILICON ALLOY BODY, HEAVY DUTY FDA APPROVED RUBBER DIAPHRAGMS, SIZE SAME AS PIPE, FULL PORT BALL VALVE ON INLET AND OUTLET OF UNIT, RATED FOR 150 PSI AT 33°F TO 130°F, APPROVED BY ASSE 1056.	WATTS (LF008PCQT), WILKINS (460XL)
CF-1	CARBON FILTER - SIMPLEX HIGH EFFICIENCY CARBON FILTER SYSTEM, SUITABLE FOR FOOD AND BEVERAGE INDUSTRY, REMOVES CHLORINE, PROGRAMMABLE CONTROLLER WITH REGENERATION BY TIME CLOCK, FLOW METER OR DIFFERENTIAL PRESSURE SWITCH, FIBERGLASS REINFORCED POLYESTR TANK. CONTINUOUS FLOW RATE OF 5 GPM AT 1 PSI PRESSURE DROP MAXIMUM FLOW RATE OF 11 GPM AT 2 PSI PRESSURE DROP DESIGN FLOW RATE OF 5.6 GPM AT 1 PSI PRESSURE DROP BACKWASH OF 10 GPM 3 CUBIC FEET OF MEDIA FILTER TANKS SIZE: 14"X47" ELECTRICAL REQUIREMENTS - PROVIDE 120V-1 PHASE RECEPTACLE. THIS EQUIPMENT REQUIRES EMERGENCY POWER.	CULLIGAN HE CF 12, MARLO ACE-12G-1
CP-1	CIRCULATING PUMP - VARIABLE SPEED, LEAD FREE BRONZE OR STAINLESS STEEL CONSTRUCTION, PERMANENTLY LUBRICATED SEALED BEARINGS, MECHANICAL SEAL, OIL LUBRICATED, ECM MOTOR WITH INTEGRATED VARIABLE SPEED CONTROL AND THERMAL OVERLOAD PROTECTION, ONE SET OF DRY CONTACTS FOR STATUS OUTPUT TO BMS, FLANGED CONNECTIONS, RATED FOR 125 PSIG AT 225°F, MANUFACTURER PROVIDED PUMP BODY INSULATION KIT, UL LISTED. 13 GPM @ 36 FEET OF HEAD. MOTOR SHALL BE 1/2 HP. ELECTRICAL REQUIREMENTS - 120V, 1 PHASE (HARD-WIRE). THIS EQUIPMENT REQUIRES EMERGENCY POWER.	PUMP - B&G (ECOCIRC XL SERIES), GRUNDFOS (MAGNA SERIES), WILO (STRATOS Z SERIES)
CP-2	CIRCULATING PUMP - VARIABLE SPEED, LEAD FREE BRONZE OR STAINLESS STEEL CONSTRUCTION, PERMANENTLY LUBRICATED SEALED BEARINGS, MECHANICAL SEAL, OIL LUBRICATED, ECM MOTOR WITH INTEGRATED VARIABLE SPEED CONTROL AND THERMAL OVERLOAD PROTECTION, ONE SET OF DRY CONTACTS FOR STATUS OUTPUT TO BMS, FLANGED CONNECTIONS, RATED FOR 125 PSIG AT 225°F, MANUFACTURER PROVIDED PUMP BODY INSULATION KIT, UL LISTED. 54 GPM @ 30 FEET OF HEAD. MOTOR SHALL BE 1 HP. ELECTRICAL REQUIREMENTS - 208/230V, 1 PHASE (HARD-WIRE). THIS EQUIPMENT REQUIRES EMERGENCY POWER.	PUMP - B&G (ECOCIRC XL SERIES), GRUNDFOS (MAGNA SERIES), WILO (STRATOS Z SERIES)
EE-1	EMERGENCY EYE/FACE WASH - ACCESSIBLE, WALL MOUNTED, STAINLESS STEEL BOWL WITH HINGED DUST COVER, TWIN SPRAY HEADS WITH CAPS AND RETAINING CHAINS/STRAPS, BRASS SUPPLY ARMS, INTEGRAL FLOW CONTROL FITTING, BRASS PIPING AND FITTINGS WITH BRASS/BRONZE STAY OPEN BALL VALVE, 1-1/4" DRAIN OUTLET WITH CHROME PLATED BRASS TAILPIECE AND TRAP, UNIVERSAL IDENTIFICATION SIGN, ANSI Z358.1-2004 COMPLIANT. MINIMUM FLOW RATE OF 3.0 GPM AT 30 PSI. ACTIVATION TIME SHALL BE 1 SECOND OR LESS. BRASS/BRONZE PIPING, FITTINGS, AND VALVES SHALL BE CHROME-PLATED OR CHEMICAL-RESISTANT POWDER COATED. MOUNT WITH OUTLET HEADS AT 36" ABOVE FINISH FLOOR WITH MINIMUM 27" OF KNEE CLEARANCE BELOW, AND MINIMUM OF 19" OF CLEARANCE FROM CENTER OF BOWL TO WALL OR OBSTRUCTION. IN COMPLIANCE WITH LATEST ADA AND ANSI 117.1 STANDARDS. MIXING VALVE - THERMOSTATIC MIXING VALVE FOR EMERGENCY EYEWASH OR COMBINATION EYEWASH/FACEWASH FIXTURE, BRONZE BODY CONSTRUCTION, COLD WATER BYPASS, OUTLET THERMOMETER, COMBINATION CHECK STOPS OR SEPARATE SUPPLY CHECK VALVES AND SHUT OFF VALVES, MOUNTING BRACKET. CONTRACTOR SHALL PROVIDE A LOCKING CABINET TO PREVENT UNAUTHORIZED CLOSURE. CABINET SHALL BE RECESSED 18 GAUGE STAINLESS STEEL WITH 16 GAUGE LOCKING DOOR TO ENCLOSE VALVE, INLET CHECK STOPS, OUTLET THERMOMETER. THERMOSTATIC MIXING AND PRESSURE REGULATING VALVES TO DELIVER 3 GPM OF TEMPERED WATER (60-100 DEGREE F) WITH 10 PSI PRESSURE DIFFERENTIAL. EYEWASH SHALL COMPLY WITH ANSI Z358.1 AND ASME A112.18.1. MIXING VALVE SHALL BE ASSE 1071 LISTED AND APPROVED.	BRADLEY (S19224T), ACORN SAFETY (S0440), ENCON (01045501), GUARDIAN (G1750), SPEAKMAN (SE-490) MIXING VALVE - LEONARD (TA-LF), ACORN CONTROLS (ET71 SERIES), ARMSTRONG (Z358), APOLLO (34ELF), BRADLEY (S19 SERIES), HAWS (TWBS.EWE), LAWLER (911E/F), POWERS (ES), SPEAKMAN (TW), GUARDIAN (G6020)
ET-1	EXPANSION TANK - WELDED STEEL CONSTRUCTION, ASME STAMPED, GUARANTEED AIRTIGHT AND LEAKPROOF, STAINLESS STEEL SYSTEM CONNECTION, HEAVY DUTY BUTYL DIAPHRAGM AND RIGID POLYPROPYLENE LINER MECHANICALLY BONDED TO TANK TO PROVIDE A 100% NON-CORROSIVE WATER RESERVOIR, DIAPHRAGM AND LINER SHALL BE APPROVED FOR USE IN POTABLE WATER SYSTEMS, ALL WETTED COMPONENTS OF FDA APPROVED MATERIALS. PROVIDE STANDARD SCHRADER AIR VALVE FOR FIELD CHARGING. TANK SHALL COMPLY WITH FEDERAL ACT S.3874. MINIMUM TANK VOLUME TO BE 53 GALLONS MINIMUM ACCEPTING VOLUME TO BE 15 GALLONS TANK SHALL HAVE A WORKING TEMPERATURE OF 200°F AND A WORKING PRESSURE OF 150 PSIG. FACTORY PRE-CHARGED FOR SHIPPING. FIELD CHARGE TANK TO 80 PSIG.	EXPANSION TANK - AMTROL (THERM-X-TROL ST-80V-C), B&G (PTA), ELBI (DTS, DTL), TACO (PAX SERIES), WATTS (DETA), WESSELS (TTA)
FCO-1	FLOOR CLEANOUT - ADJUSTABLE, CAST IRON HOUSING, ANCHOR FLANGE, TAPERED THREAD PLUG, SECURED NICKEL BRONZE TOP. TOP STYLE SHALL MATCH FLOOR FINISH AS FOLLOWS: UNFINISHED FLOOR - ROUND SOLID SCORIATED TOP TILE OR TERRAZZO - ROUND RECESSED TOP PROVIDE TAMPER RESISTANT PLUG/VANDAL PROOF TOP.	ZURN (Z1400), JOSAM (55000), MIFAB (C1100), SMITH (4000), WADE (6000), WATTS (CO-200)
FD-1	FLOOR DRAIN - CAST IRON BODY, NICKEL BRONZE ADJUSTABLE TOP, 7" ROUND , 2" BOTTOM OUTLET, FLASHING COLLAR, SURFACE MEMBRANE CLAMP, VANDAL PROOF SECURITY SCREWS.	FLOOR DRAIN - ZURN (Z-415), SMITH (2005), WADE (1100), JOSAM (30000), WATTS (FD-100), MIFAB (F1100), SUN (FD1000)
FD-2	FLOOR DRAIN - CAST IRON BODY, NICKEL BRONZE ADJUSTABLE TOP, 7" ROUND, 4" DIAMETER FUNNEL, 2" BOTTOM OUTLET, FLASHING COLLAR, VANDAL PROOF SECURITY SCREWS.	FLOOR DRAIN - ZURN (Z-415), SMITH (2010), WADE (1100), JOSAM (30000), WATTS (FD-100), MIFAB (F1100), SUN (FD1000)
FD-3	FLOOR DRAIN - CAST IRON BODY, NICKEL BRONZE ADJUSTABLE TOP, 7" ROUND , 4" BOTTOM OUTLET, FLASHING COLLAR, SURFACE MEMBRANE CLAMP, VANDAL PROOF SECURITY SCREWS.	FLOOR DRAIN - ZURN (Z-415), SMITH (2005), WADE (1100), JOSAM (30000), WATTS (FD-100), MIFAB (F1100), SUN (FD1000)
FD-4	FLOOR DRAIN - CAST IRON BODY, NICKEL BRONZE ADJUSTABLE TOP, 7" ROUND , 3" BOTTOM OUTLET, FLASHING COLLAR, SURFACE MEMBRANE CLAMP, VANDAL PROOF SECURITY SCREWS. TRAP SEAL - 3", PLASTIC HOUSING WITH FLEXIBLE DIAPHRAGM, SEALING GASKETS, RECLOSES AND SEALS WHEN DISCHARGE IS COMPLETED, ASSE 1072.	FLOOR DRAIN - ZURN (Z-415), SMITH (2005), WADE (1100), JOSAM (30000), WATTS (FD-100), MIFAB (F1100), SUN (FD1000) TRAP SEAL - SURE SEAL (SS), PROVENT (TRAP GUARD), SMITH (QUAD CLOSE), GREEN DRAIN, MIFAB (MI-GARD)
FM-1	FLOW METER - INLINE SIGHT GAUGE FLOW INDICATOR, SUITABLE FOR USE WITH POTABLE WATER, FLOW METER PIPE CONNECTION SIZE SHALL MATCH PIPE SIZE, STAINLESS STEEL CONNECTIONS, POLYSULFONE PLASTIC BODY, PISTON AND CONE, T300-SERIES STAINLESS SPRING, BUNA-N FLOW INDICATOR RING AND PRESSURE SEALS, PRESSURE RATING OF NOT LESS THAN 325 PSI AND TEMPERATURE RATING OF NOT LESS THAN 250oF, ACCURACY WITHIN 5% OF FULL SCALE, MANUFACTURER APPROVED INSTALLATION IN ANY ORIENTATION, SELECT APPROPRIATE SCALE FOR APPLICATION AND LOCATION. FLOW METER FLOW RANGE: 3 - 18 GPM, MAXIUMUM PRESSURE DROP OF 3.8 PSI AT 18 GPM.	FLOW METER - HEDLAND (EZ-VIEW H600 SERIES), OMEGA (EZ-VIEW FL-9000 SERIES OR FL-500 SERIES), LAKE MONITORS (STYLE B)
FS-1	FLOOR SINK - CAST IRON BODY, NICKEL BRONZE RIM AND HALF GRATE, 12" SQUARE, 3" BOTTOM OUTLET, 6" DEEP RECEPTOR WITH ALUMINUM DOME STRAINER ACID RESISTANT COATED INTERIOR, SEEPAGE FLANGE WITH CLAMP, VANDAL-PROOF STRAINER AND VANDAL-PROOF SECURE TOP. FLOOR SINKS SHALL BE INSTALLED FLUSH WITH THE FLOOR.	ZURN (Z1901), SMITH (3151), WADE (9140), JOSAM (49340A), WATTS (FS-740), SIOUX CHIEF (861-2xXFNWC), SUN (FS2000), MIFAB (FS1730)
FS-2	FLOOR SINK - CAST IRON BODY, NICKEL BRONZE RIM AND HALF GRATE, 12" SQUARE, 4" BOTTOM OUTLET, 6" DEEP RECEPTOR WITH ALUMINUM DOME STRAINER ACID RESISTANT COATED INTERIOR, SEEPAGE FLANGE WITH CLAMP, VANDAL-PROOF STRAINER AND VANDAL-PROOF SECURE TOP. FLOOR SINKS SHALL BE INSTALLED FLUSH WITH THE FLOOR.	ZURN (Z1901), SMITH (3151), WADE (9140), JOSAM (49340A), WATTS (FS-740), SIOUX CHIEF (861-2xXFNWC), SUN (FS2000), MIFAB (FS1730)

PLUMBING MATERIAL LIST

TAG NAME	DESCRIPTION	MANUFACTURER AND MODEL
FS-3	FLOOR SINK - CAST IRON BODY, NICKEL BRONZE RIM AND FULL GRATE, 12" SQUARE, 3" BOTTOM OUTLET, 6" DEEP RECEPTOR WITH ALUMINUM DOME STRAINER ACID RESISTANT COATED INTERIOR, SEEPAGE FLANGE WITH CLAMP, VANDAL-PROOF STRAINER AND VANDAL-PROOF SECURE TOP. FLOOR SINKS SHALL BE INSTALLED FLUSH WITH THE FLOOR.	ZURN (Z1901), SMITH (3151), WADE (9140), JOSAM (49340A), WATTS (FS-740), SIOUX CHIEF (861-2xXFNWC), SUN (FS2000), MIFAB (FS1730)
FSE-18	HAND SINK - PROVIDED BY FSEC, INSTALLED BY FSEC WITH FINAL CONNECTIONS BY P.C. P-TRAP PROVIDED BY FSEC, INSTALLED BY P.C. P.C. TO PROVIDE MIXING VALVE (MV-3) AND ACCESSORIES. ACCESSORIES - QUARTER-TURN BALL VALVE TYPE 3/8" CHROME-PLATED BRASS ANGLE SUPPLIES WITH LOOSE KEY STOPS, CHROME-PLATED SOFT COPPER SUPPLY LINES.	HAND SINK - REFER TO FOOD SERVICE PLANS MIXING VALVE - MV-3, REFER TO PLUMBING MATERIAL LIST
FSE-22	WORK COUNTER WITH SINKS - PROVIDED BY FSEC, INSTALLED BY FSEC WITH FINAL CONNECTIONS BY P.C. P.C. TO PROVIDE MIXING VALVE (MV-3) AND ACCESSORIES. ACCESSORIES - 2" 17 GAUGE CHROME-PLATED BRASS TAILPIECE AND P-TRAP, QUARTER-TURN BALL VALVE TYPE 3/8" CHROME-PLATED BRASS ANGLE SUPPLIES WITH LOOSE KEY STOPS, CHROME-PLATED SOFT COPPER SUPPLY LINES. PROVIDE INDIRECT DRAIN PIPING FROM SINK TO FLOOR SINK AND DISCHARGE WITH AN AIR GAP.	WORK COUNTER WITH SINKS - REFER TO FOOD SERVICE PLANS MIXING VALVE - MV-3, REFER TO PLUMBING MATERIAL LIST
FSE-62	WORK COUNTER WITH SINKS - PROVIDED BY FSEC, INSTALLED BY FSEC WITH FINAL CONNECTIONS BY P.C. P.C. TO PROVIDE MIXING VALVE (MV-3) AND ACCESSORIES. ACCESSORIES - 2" 17 GAUGE CHROME-PLATED BRASS TAILPIECE AND P-TRAP, QUARTER-TURN BALL VALVE TYPE 3/8" CHROME-PLATED BRASS ANGLE SUPPLIES WITH LOOSE KEY STOPS, CHROME-PLATED SOFT COPPER SUPPLY LINES. PROVIDE INDIRECT DRAIN PIPING FROM SINK TO FLOOR SINK AND DISCHARGE WITH AN AIR GAP.	WORK COUNTER WITH SINKS - REFER TO FOOD SERVICE PLANS MIXING VALVE - MV-3, REFER TO PLUMBING MATERIAL LIST
FSE-64	WATER METER WITH TEMPERATURE RANGE - PROVIDED BY FSEC, INSTALLED BY FSEC WITH FINAL CONNECTIONS BY P.C. P.C. TO PROVIDE SHUTOFF VALVES AND BACKFLOW PREVENTER (BFP-3).	WATER METER WITH TEMPERATURE RANGE - REFER TO FOOD SERVICE PLANS BACKFLOW PREVENTER - BFP-3, REFER TO PLUMBING MATERIAL LIST.
FSE-68	HAND SINK - PROVIDED BY FSEC, INSTALLED BY FSEC WITH FINAL CONNECTIONS BY P.C. P-TRAP PROVIDED BY FSEC, INSTALLED BY P.C. P.C. TO PROVIDE MIXING VALVE (MV-3) AND ACCESSORIES. ACCESSORIES - QUARTER-TURN BALL VALVE TYPE 3/8" CHROME-PLATED BRASS ANGLE SUPPLIES WITH LOOSE KEY STOPS, CHROME-PLATED SOFT COPPER SUPPLY LINES.	HAND SINK - REFER TO FOOD SERVICE PLANS MIXING VALVE - MV-3, REFER TO PLUMBING MATERIAL LIST
FSE-74	ROLL-IN PROOFER - PROVIDED BY FSEC, INSTALLED BY FSEC WITH FINAL CONNECTIONS BY P.C. P.C. SHALL PROVIDE SHUT OFF VALVE AND BACKFLOW PREVENTER (BFP-3).	ROLL-IN PROOFER, REFER TO FOOD SERVICE PLANS. BACKFLOW PREVENTER - BFP-3, REFER TO PLUMBING MATERIAL LIST.
FSE-87	RACK OVEN - PROVIDED BY FSEC. THIS PIECE OF EQUIPMENT IS EXISTING LOCATED IN THE EXISTING KITCHEN LOCATED ELSEWHERE ON CAMPUS. P.C. SHALL DISCONNECT , FSEC TO RELOCATE, AND P.C. SHALL RECONNECT WITH NEW. P.C. SHALL PROVIDE SHUT OFF VALVE AND BACKFLOW PREVENTER (BFP-3).	RACK OVER, REFER TO FOOD SERVICE PLANS. BACKFLOW PREVENTER - BFP-3, REFER TO PLUMBING MATERIAL LIST.
FSE-91	ICE MACHINE - PROVIDED BY FSEC, INSTALLED BY FSEC WITH FINAL CONNECTIONS BY P.C. P.C. TO PROVIDE SHUTOFF VALVE, RECCESSED BOX, WATER HAMMER ARRESTOR (WHA-1) AND BACKFLOW PREVENTER (BFP-4). SUPPLY SHUT OFF VALVE SHALL BE INSTALLED IN A LOCKING CABINET TO PREVENT UNAUTHORIZED CLOSURE. CABINET SHALL BE RECESSED 18 GAUGE STAINLESS STEEL WITH 16 GAUGE LOCKING DOOR TO ENCLOSE VALVE, BACKFLOW PREVENTER AND WATER HAMMER ARRESTOR.	ICE MACHINE - REFER TO FOOD SERVICE PLANS BACKFLOW PREVENTER - BFP-4, REFER TO PLUMBING MATERIAL LIST. WATER HAMMER ARRESTOR - WHA-1, REFER TO PLUMBING MATERIAL LIST.
FSE-100	HAND SINK - PROVIDED BY FSEC, INSTALLED BY FSEC WITH FINAL CONNECTIONS BY P.C. P-TRAP PROVIDED BY FSEC, INSTALLED BY P.C. P.C. TO PROVIDE MIXING VALVE (MV-3) AND ACCESSORIES. ACCESSORIES - QUARTER-TURN BALL VALVE TYPE 3/8" CHROME-PLATED BRASS ANGLE SUPPLIES WITH LOOSE KEY STOPS, CHROME-PLATED SOFT COPPER SUPPLY LINES.	HAND SINK - REFER TO FOOD SERVICE PLANS MIXING VALVE - MV-3, REFER TO PLUMBING MATERIAL LIST
FSE-104	WORK COUNTER WITH SINKS - PROVIDED BY FSEC, INSTALLED BY FSEC WITH FINAL CONNECTIONS BY P.C. P.C. TO PROVIDE MIXING VALVE (MV-3) AND ACCESSORIES. ACCESSORIES - 2" 17 GAUGE CHROME-PLATED BRASS TAILPIECE AND P-TRAP, QUARTER-TURN BALL VALVE TYPE 3/8" CHROME-PLATED BRASS ANGLE SUPPLIES WITH LOOSE KEY STOPS, CHROME-PLATED SOFT COPPER SUPPLY LINES. PROVIDE INDIRECT DRAIN PIPING FROM SINK TO FLOOR SINK AND DISCHARGE WITH AN AIR GAP.	WORK COUNTER WITH SINKS - REFER TO FOOD SERVICE PLANS MIXING VALVE - MV-3, REFER TO PLUMBING MATERIAL LIST
FSE-107	SPRAY RINSE - PROVIDED BY FSEC, INSTALLED BY FSEC WITH FINAL CONNECTIONS BY P.C. P.C. TO PROVIDE MIXING VALVE (MV-2) TO REDUCE HOT WATER TEMPERATURE AND SHUTOFF VALVES FOR HOT WATER AND COLD WATER.	SPRAY RINSE - REFER TO FOOD SERVICE PLANS. MIXING VALVE - MV-2, REFER TO PLUMBING MATERIAL LIST.
FSE-118	HOSE STATION - PROVIDED BY FSEC, INSTALLED BY FSEC WITH FINAL CONNECTIONS BY P.C. P.C. TO PROVIDE MIXING VALVE (MV-2) TO REDUCE HOT WATER TEMPERATURE, SHUTOFF VALVES AND INLET CHECK VALVES FOR HOT WATER AND COLD WATER.	HOSE STATION - REFER TO FOOD SERVICE PLANS. MIXING VALVE - MV-2, REFER TO PLUMBING MATERIAL LIST.
FSE-145	WORK COUNTER WITH SINKS - PROVIDED BY FSEC, INSTALLED BY FSEC WITH FINAL CONNECTIONS BY P.C. P.C. TO PROVIDE MIXING VALVE (MV-3) AND ACCESSORIES. ACCESSORIES - 2" 17 GAUGE CHROME-PLATED BRASS TAILPIECE AND P-TRAP, QUARTER-TURN BALL VALVE TYPE 3/8" CHROME-PLATED BRASS ANGLE SUPPLIES WITH LOOSE KEY STOPS, CHROME-PLATED SOFT COPPER SUPPLY LINES. PROVIDE INDIRECT DRAIN PIPING FROM SINK TO FLOOR SINK AND DISCHARGE WITH AN AIR GAP.	WORK COUNTER WITH SINKS - REFER TO FOOD SERVICE PLANS MIXING VALVE - MV-3, REFER TO PLUMBING MATERIAL LIST
FSE-146	WORK COUNTER WITH SINKS - PROVIDED BY FSEC, INSTALLED BY FSEC WITH FINAL CONNECTIONS BY P.C. P.C. TO PROVIDE MIXING VALVE (MV-3) AND ACCESSORIES. ACCESSORIES - 2" 17 GAUGE CHROME-PLATED BRASS TAILPIECE AND P-TRAP, QUARTER-TURN BALL VALVE TYPE 3/8" CHROME-PLATED BRASS ANGLE SUPPLIES WITH LOOSE KEY STOPS, CHROME-PLATED SOFT COPPER SUPPLY LINES. PROVIDE INDIRECT DRAIN PIPING FROM SINK TO FLOOR SINK AND DISCHARGE WITH AN AIR GAP.	WORK COUNTER WITH SINKS - REFER TO FOOD SERVICE PLANS MIXING VALVE - MV-3, REFER TO PLUMBING MATERIAL LIST
FSE-154	60 GALLON KETTLE - PROVIDED BY FSEC, INSTALLED BY FSEC WITH FINAL CONNECTIONS BY P.C. P.C. TO PROVIDE SHUTOFF VALVE. FSEC WILL PROVIDE A QUICK-DISCONNECT FLEXIBLE HOSE FOR INSTALLATION BY P.C. REFER TO QUICK DISCONNECT DETAIL ON FSM101. PIPING TO KETTLE WILL BE PART OF UDS.	60 GALLON KETTLE - REFER TO FOOD SERVICE PLANS.
FSE-155	80 GALLON KETTLE - PROVIDED BY FSEC, INSTALLED BY FSEC WITH FINAL CONNECTIONS BY P.C. P.C. TO PROVIDE SHUTOFF VALVE. FSEC WILL PROVIDE A QUICK-DISCONNECT FLEXIBLE HOSE FOR INSTALLATION BY P.C. REFER TO QUICK DISCONNECT DETAIL ON FSM101. PIPING TO KETTLE WILL BE PART OF UDS.	60 GALLON KETTLE - REFER TO FOOD SERVICE PLANS.
FSE-158	STEAMER - PROVIDED BY FSEC, INSTALLED BY FSEC WITH FINAL CONNECTIONS BY P.C. P.C. TO PROVIDE SHUTOFF VALVES, PRESSURE REDUCING VALVE (PRV-1) AND BACKFLOW PREVENTER (BFP-3). FSEC WILL PROVIDE A QUICK-DISCONNECT FLEXIBLE HOSE FOR INSTALLATION BY P.C. REFER TO QUICK DISCONNECT DETAIL ON FSM101. PIPING TO KETTLE WILL BE PART OF UDS.	STEAMER - REFER TO FOOD SERVICE PLANS. PRESSURE REDUCING VALVE - PRV-1, REFER TO PLUMBING MATERIAL LIST. BACKFLOW PREVENTER - BFP-3, REFER TO PLUMBING MATERIAL LIST.
FSE-160	STEAMER - PROVIDED BY FSEC, INSTALLED BY FSEC WITH FINAL CONNECTIONS BY P.C. P.C. TO PROVIDE SHUTOFF VALVES, PRESSURE REDUCING VALVE (PRV-1) AND BACKFLOW PREVENTER (BFP-3). FSEC WILL PROVIDE A QUICK-DISCONNECT FLEXIBLE HOSE FOR INSTALLATION BY P.C. REFER TO QUICK DISCONNECT DETAIL ON FSM101. PIPING TO KETTLE WILL BE PART OF UDS.	STEAMER - REFER TO FOOD SERVICE PLANS. PRESSURE REDUCING VALVE - PRV-1, REFER TO PLUMBING MATERIAL LIST. BACKFLOW PREVENTER - BFP-3, REFER TO PLUMBING MATERIAL LIST.
FSE-161	STEAMER - PROVIDED BY FSEC, INSTALLED BY FSEC WITH FINAL CONNECTIONS BY P.C. P.C. TO PROVIDE SHUTOFF VALVES, PRESSURE REDUCING VALVE (PRV-1) AND BACKFLOW PREVENTER (BFP-3). FSEC WILL PROVIDE A QUICK-DISCONNECT FLEXIBLE HOSE FOR INSTALLATION BY P.C. REFER TO QUICK DISCONNECT DETAIL ON FSM101. PIPING TO KETTLE WILL BE PART OF UDS.	STEAMER - REFER TO FOOD SERVICE PLANS. PRESSURE REDUCING VALVE - PRV-1, REFER TO PLUMBING MATERIAL LIST. BACKFLOW PREVENTER - BFP-3, REFER TO PLUMBING MATERIAL LIST.
FSE-162	HOSE REEL - PROVIDED BY FSEC, INSTALLED BY FSEC WITH FINAL CONNECTIONS BY P.C. REFER TO HOSE REEL DETAIL ON FSM101 FOR ADDITIONAL COMPONENTS PROVIDED BY FSEC AND SCOPE OF WORK BETWEEN FSEC AND P.C. P.C. TO PROVIDE SHUTOFF VALVES AND BACKFLOW PREVENTER (BFP-3).	HOSE REEL - REFER TO FOOD SERVICE PLANS. BACKFLOW PREVENTER - BFP-3, REFER TO PLUMBING MATERIAL LIST.

PLUMBING MATERIAL LIST

TAG NAME	DESCRIPTION	MANUFACTURER AND MODEL
FSE-163	RACK OVEN - PROVIDED BY FSEC, INSTALLED BY FSEC WITH FINAL CONNECTIONS BY P.C. P.C. SHALL PROVIDE SHUT OFF VALVE AND BACKFLOW PREVENTER (BFP-3).	RACK OVER, REFER TO FOOD SERVICE PLANS. BACKFLOW PREVENTER - BFP-3, REFER TO PLUMBING MATERIAL LIST.
FSE-173	POT & PAN SINK - PROVIDED BY FSEC, INSTALLED BY FSEC WITH FINAL CONNECTIONS BY P.C. P.C. TO PROVIDE MIXING VALVE (MV-3) AND ACCESSORIES. ACCESSORIES - 2" 17 GAUGE CHROME-PLATED BRASS TAILPIECE AND P-TRAP, QUARTER-TURN BALL VALVE TYPE 3/8" CHROME-PLATED BRASS ANGLE SUPPLIES WITH LOOSE KEY STOPS, CHROME-PLATED SOFT COPPER SUPPLY LINES.	POT & PAN SINK - REFER TO FOOD SERVICE PLANS MIXING VALVE - MV-3, REFER TO PLUMBING MATERIAL LIST
FSE-175	SPRAY RINSE - PROVIDED BY FSEC, INSTALLED BY FSEC WITH FINAL CONNECTIONS BY P.C. P.C. TO PROVIDE MIXING VALVE (MV-2) TO REDUCE HOT WATER TEMPERATURE AND SHUTOFF VALVES FOR HOT WATER AND COLD WATER.	SPRAY RINSE - REFER TO FOOD SERVICE PLANS. MIXING VALVE - MV-2, REFER TO PLUMBING MATERIAL LIST.
FSE-184	HOSE REEL - PROVIDED BY FSEC, INSTALLED BY FSEC WITH FINAL CONNECTIONS BY P.C. REFER TO HOSE REEL DETAIL ON FSM101 FOR ADDITIONAL COMPONENTS PROVIDED BY FSEC AND SCOPE OF WORK BETWEEN FSEC AND P.C. P.C. TO PROVIDE SHUTOFF VALVES AND BACKFLOW PREVENTER (BFP-3).	HOSE REEL - REFER TO FOOD SERVICE PLANS. BACKFLOW PREVENTER - BFP-3, REFER TO PLUMBING MATERIAL LIST.
FSE-185	EYE/FACE WASH STATION INCLUDING MIXING VALVE WITH RECESSED CABINET- PROVIDED BY FSEC, INSTALLED BY FSEC WITH FINAL CONNECTIONS BY P.C. P.C. INSTALL MIXING VALVE AND PROVIDE SHUTOFF, INLET CHECK STOPS AND OUTLET THERMOMETER WHICH SHALL BE INSTALLED WITHIN CABINET BY FSEC PREVENT UNAUTHORIZED CLOSURE.	EYE/FACE WASH STATION - REFER TO FOOD SERVICE PLANS.
FSE-189	FLIGHT-TYPE DISHWASHER - PROVIDED BY FSEC, INSTALLED BY FSEC WITH FINAL CONNECTIONS BY P.C. P.C. TO PROVIDE SHUTOFF VALVES, PRESSURE REDUCING VALVES (PRV-2) AND BACKFLOW PREVENTER (BFP-5).	DISHWASHER - REFER TO FOOD SERVICE PLANS. PRESSURE REDUCING VALVE - PRV-12 REFER TO PLUMBING MATERIAL LIST. BACKFLOW PREVENTER - BFP-5, REFER TO PLUMBING MATERIAL LIST.
FSE-191	SPRAY RINSE - PROVIDED BY FSEC, INSTALLED BY FSEC WITH FINAL CONNECTIONS BY P.C. P.C. TO PROVIDE MIXING VALVE (MV-2) TO REDUCE HOT WATER TEMPERATURE AND SHUTOFF VALVES FOR HOT WATER AND COLD WATER.	SPRAY RINSE - REFER TO FOOD SERVICE PLANS. MIXING VALVE - MV-2, REFER TO PLUMBING MATERIAL LIST.
GI-1	GREASE INTERCEPTOR - UNDERGROUND INSTALLATION, POLYETHYLENE, HDPE, OR FIBERGLASS REINFORCED POLYESTER CONSTRUCTION, REMOVABLE OR CLEANABLE INTAKE AND DISCHARGE BAFFLES, INTERNAL FLOW CONTROL FITTING IF NECESSARY FOR OPERATION, GASKETED H-20 RATED COVER, PDI G101 COMPLIANT, PDI APPROVED AND LISTED FOR USE, 30 YEAR WARRANTY. PROVIDE RISERS FOR EXTENDING COVER TO GRADE. PROVIDE TWO-WAY CLEANOUTS UPSTREAM AND DOWNSTREAM OF GREASE INTERCEPTOR. PROVIDE TANK HOLD DOWN SYSTEM AS REQUIRED BY MANUFACTURER FOR THE SOIL TYPE AND WATER TABLE. BASIS OF DESIGN SCHIER UNIT DOES NOT REQUIRE TANK OR FLOW CONTROL VENT PIPING. OTHER GREASE INTERCEPTOR MANUFACUTURES MAY REQUIRE TANK AND FLOW CONTROL FITTING VENT SYSTEMS. THESE ADDITIONAL SYSTEMS SHALL BE INSTALLED BY THE CONTRACTOR AT NO ADDITIONAL COST TO THE PROJECT IF THESE ALTERNATIVE PRODUCTS ARE SUBMITTED AND INSTALLED. 200 GPM FLOW, 14,877 LB. GREASE CAPACITY, 1000 GALLONS HOLDING CAPACITY, 6" PIPE INLET AND OUTLET.	GREASE INTERCEPTOR - SCHIER (GREAT BASIN GB-1000), MIFAB (XL-MI-G-PL-1150), ZURN GREEN TURTLE (PROCEPTOR GMC300-PDI)
GR-1	DOAS-1 GAS PRESSURE REGULATOR - CAST IRON BODY, INTERNAL PRESSURE RELIEF, THREADED CONNECTIONS, ADJUSTABLE PRESSURE SETTING, TIGHT SHUTOFF. 1 PSI INLET PRESSURE, 11" OUTLET PRESSURE, 1,950 CFH CAPACITY, MINIMUM CONTROLLABLE FLOW of 50 CFH. CONTRACTOR SHALL SIZE AND ROUTE REGULATOR VENTING PER MANUFACTURER'S INSTALLATION INSTRUCTIONS WITH A MAXIMUM EQUIVALENT LENGTH OF 60 FEET. ESTIMATED VENT SIZE IS 1" WITH VENT EXTENDING OUT ADJACENT EXTERIOR WALL FOR BASIS OF DESIGN REGULATOR.	FISHER (FSC800 SERIES), ITRON, SENSUS, MAXITROL
GR-2	AHU-1 GAS PRESSURE REGULATOR - CAST IRON BODY, INTERNAL PRESSURE RELIEF, THREADED CONNECTIONS, ADJUSTABLE PRESSURE SETTING, TIGHT SHUTOFF. 1 PSI INLET PRESSURE, 11" OUTLET PRESSURE, 215 CFH CAPACITY, MINIMUM CONTROLLABLE FLOW OF 10 CFH. CONTRACTOR SHALL SIZE AND ROUTE REGULATOR VENTING PER MANUFACTURER'S INSTALLATION INSTRUCTIONS WITH A MAXIMUM EQUIVALENT LENGTH OF 60 FEET. ESTIMATED VENT SIZE IS 1" WITH VENT EXTENDING OUT ADJACENT EXTERIOR WALL FOR BASIS OF DESIGN REGULATOR.	FISHER (FSHRS SERIES), ITRON, SENSUS, MAXITROL
GR-3	KITCHEN GAS PRESSURE REGULATOR - CAST IRON BODY, INTERNAL PRESSURE RELIEF, THREADED CONNECTIONS, ADJUSTABLE PRESSURE SETTING, TIGHT SHUTOFF. 1 PSI INLET PRESSURE, 10" OUTLET PRESSURE, 2,442 CFH CAPACITY , MINIMUM CONTROLLABLE FLOW OF 45 CFH. CONTRACTOR SHALL SIZE AND ROUTE REGULATOR VENTING PER MANUFACTURER'S INSTALLATION INSTRUCTIONS WITH A MAXIMUM EQUIVALENT LENGTH OF 60 FEET. ESTIMATED VENT SIZE IS 1" WITH VENT EXTENDING OUT ADJACENT EXTERIOR WALL FOR BASIS OF DESIGN REGULATOR.	FISHER (FSC800 SERIES), ITRON, SENSUS, MAXITROL
GR-4	WATER HEATER (WH-4) GAS PRESSURE REGULATOR - CAST IRON BODY, INTERNAL PRESSURE RELIEF, THREADED CONNECTIONS, ADJUSTABLE PRESSURE SETTING, TIGHT SHUTOFF. 1 PSI INLET PRESSURE, 11" OUTLET PRESSURE, 1,350 CFH CAPACITY, MINIMUM CONTROLLABLE FLOW OF 35 CFH. CONTRACTOR SHALL SIZE AND ROUTE REGULATOR VENTING PER MANUFACTURER'S INSTALLATION INSTRUCTIONS WITH A MAXIMUM EQUIVALENT LENGTH OF 60 FEET. ESTIMATED VENT SIZE IS 1" WITH VENT EXTENDING OUT ADJACENT EXTERIOR WALL FOR BASIS OF DESIGN REGULATOR.	FISHER (FSC800 SERIES), ITRON, SENSUS, MAXITROL
GR-5	WATER HEATER (WH-5) GAS PRESSURE REGULATOR - CAST IRON BODY, INTERNAL PRESSURE RELIEF, THREADED CONNECTIONS, ADJUSTABLE PRESSURE SETTING, TIGHT SHUTOFF. 1 PSI INLET PRESSURE, 11" OUTLET PRESSURE, 1,350 CFH CAPACITY, MINIMUM CONTROLLABLE FLOW OF 35 CFH. CONTRACTOR SHALL SIZE AND ROUTE REGULATOR VENTING PER MANUFACTURER'S INSTALLATION INSTRUCTIONS WITH A MAXIMUM EQUIVALENT LENGTH OF 60 FEET. ESTIMATED VENT SIZE IS 1" WITH VENT EXTENDING OUT ADJACENT EXTERIOR WALL FOR BASIS OF DESIGN REGULATOR.	FISHER (FSC800 SERIES), ITRON, SENSUS, MAXITROL
GR-6	BOILER ROOM GAS PRESSURE REGULATOR - CAST IRON BODY, EXTERNAL PRESSURE RELIEF, THREADED CONNECTIONS, ADJUSTABLE PRESSURE SETTING, TIGHT SHUTOFF. EXTERNAL PRESSURE RELIEF SHALL BE AS RECOMMENDED BY MANUFACTURER. BASIS OF DESIGN EXTERNAL PRESSURE RELIEF IS MODEL 289H. 2 PSI INLET PRESSURE, 1 PSI OUTLET PRESSURE, 10,700 CFH CAPACITY, MINIMUM CONTROLLABLE FLOW OF 200 CFH. CONTRACTOR SHALL SIZE AND ROUTE REGULATOR VENTING PER MANUFACTURER'S INSTALLATION INSTRUCTIONS WITH A MAXIMUM EQUIVALENT LENGTH OF 60 FEET. ESTIMATED VENT SIZE IS 1" WITH VENT EXTENDING OUT ADJACENT EXTERIOR WALL FOR BASIS OF DESIGN REGULATOR.	FISHER (FS133 SERIES), ITRON, SENSUS, MAXITROL
GR-7	DRYER GAS PRESSURE REGULATOR (DRYERS) - CAST IRON BODY, INTERNAL PRESSURE RELIEF, THREADED CONNECTIONS, ADJUSTABLE PRESSURE SETTING, TIGHT SHUTOFF. 1 PSI INLET PRESSURE, 10" OUTLET PRESSURE, 415 CFH CAPACITY, MINIMUM CONTROLLABLE FLOW OF 15 CFH. CONTRACTOR SHALL SIZE AND ROUTE REGULATOR VENTING PER MANUFACTURER'S INSTALLATION INSTRUCTIONS WITH A MAXIMUM EQUIVALENT LENGTH OF 60 FEET. ESTIMATED VENT SIZE IS 1" WITH VENT EXTENDING OUT ADJACENT EXTERIOR WALL FOR BASIS OF DESIGN REGULATOR. CONFIRM OUTLET PRESSURE SETTING WITH PROVIDED DRYER. BASIS OF DESIGN REQUIRES OUTLET PRESSURE BETWEEN 6" AND 12" OF OUTLET PRESSURE.	FISHER (FSCS400 SERIES), ITRON, SENSUS, MAXITROL
HB-1	HOSE BIBB - FREEZELESS WALL HYDRANT, BRASS VALVE BODY AND SEAT, STANDARD FINISH, NON-FERROUS METAL STEM, AUTOMATIC DRAINING, VACUUM BREAKER, 3/4" MALE HOSE THREAD, WALL CLAMP, CONCEALED IN FLUSH MOUNTED LOCKABLE WALL BOX, KEY OPERATED, ASSE 1019 OR 1052 LISTED AND APPROVED. VERIFY NUMBER OF KEY OPERATORS TO BE PROVIDED WITH OWNER. BOX COVER AND HYDRANT SHALL USE A COMMON KEY. MOUNT AT 18" ABOVE GRADE UNLESS NOTED OTHERWISE ON DRAWINGS.	PRIER (C-634BX), WOODFORD (B67), ZURN (Z1300), WATTS (HY-725), MIFAB (MHY-20), SMITH (5509QT), WADE (8700)
HPT-1	HYDRO-PNEUMATIC TANK - CARBON STEEL OR FIBERGLASS SHELL AND REPLACABLE FDA-APROVED HEAVY-DUTY BLADDER TO SEPARATE THE AIR AND WATER. NO WATER SHALL COME IN CONTACT WITH THE METAL TANK WALLS. FEATURES SHALL INCLUDE AN AIR FILL VALVE AND BOTTOM SYSTEM CONNECTION SUITABLE FOR 100% DRAW-DOWN. TANK SHALL BE CONSTRUCTED IN ACCORDANCE WITH SECTION VIII OF THE ASME CODE AND BE N.B. STAMPED. MINIMUM TANK VOLUME TO BE 132 GALLONS. MINIMUM ACCCEPTANCE VOLUME TO BE 15 GALLONS.	HYDRON-PNEUMATIC TANK - AMTROL , B&G, ELBI, TACO, WATTS, WESSELS

PLUMBING MATERIAL LIST

TAG NAME	DESCRIPTION	MANUFACTURER AND MODEL
L-1	LAVATORY - ACCESSIBLE, WALL MOUNTED, WHITE VITREOUS CHINA, 20"x18", 4" HIGH CONTOURED BACKSPLASH, FAUCET HOLES ON 4" CENTERS, DRILLED FOR CONCEALED ARM CARRIER. LAVATORY TRIM - LAVATORY TRIM - SENSOR ACTIVATED MIXING FAUCET, HARD-WIRED, BRASS CONSTRUCTION, CHROME-PLATED FINISH, CONVENTIONAL SPOUT WITH LAMINAR FLOW, 4" DECK PLATE, PERFORATED GRID STRAINER WITH 1-1/4" 17 GAUGE TAILPIECE, SOLID BRASS SOLENOID WITH BUILT-IN FILTER, WATERPROOF CONNECTORS AND CABLE , UL APPROVED TRANSFORMER. ELECTRICAL REQUIREMENTS - 120 VAC INPUT MOUNT CONTROLS IN WATERPROOF VANDAL-RESISTANT ENCLOSURE BELOW LAVATORY. PROVIDE TRANSFORMER WITH CABLE EXTENSIONS (AS REQUIRED) OR PLUG-IN TRANSFORMER. MOUNT TRANSFORMER ABOVE CEILING OR IN ACCESSIBLE PIPE CHASE. COORDINATE LOCATION WITH ELECTRICAL CONTRACTOR. SELECT TRANSFORMER TO SERVE MAXIMUM NUMBER OF ELECTRONIC VALVES TO REDUCE AMOUNT OF TRANSFORMERS. MAXIMUM FLOW TO BE 0.5 GPM IN COMPLIANCE WITH ENERGY POLICY ACT OF 2005 AND ASME/ANSI STANDARD A112.18.1M AND WATERSENSE LABELED PER LEED REQUIREMENTS. FAUCET SHALL COMPLY WITH FEDERAL ACT S.3874. PROVIDE RESTRICTIVE DEVICE AS REQUIRED. MOUNT MIXING VALVE UNDER COUNTER/LAVATORY. MIXING VALVE SHALL NOT BE WYE PATTERN STYLE. MIXING VALVE - MV-1, REFER TO PLUMBING MATERIAL LIST. UNIT SHALL BE ASSE 1070 LISTED AND APPROVED. VALVE SHALL COMPLY WITH FEDERAL ACT S.3874. INSULATION KIT - PRE-MANUFACTURED FOR P-TRAP, STOP VALVES AND SUPPLY LINES. ACCESSORIES - QUARTER-TURN 3/8" CHROME PLATED HEAVY BRASS ANGLE SUPPLY LOOSE KEY STOPS, CHROME PLATED SOFT COPPER SUPPLY LINES, DRAIN AND OFFSET TAILPIECE, 1-1/4" 17 GAUGE CAST BRASS P-TRAP, SUPPORT CARRIER. MOUNT LAVATORY WITH SUPPORT CARRIER BOLTED SECURELY TO FLOOR. TOP OF RIM SHALL BE AT 34" ABOVE FLOOR IN COMPLIANCE WITH LATEST ADA STANDARD. PROVIDE 29" MINIMUM CLEARANCE FROM FLOOR TO BOTTOM OF APRON IN COMPLIANCE WITH LATEST ANSI A117.1 AND ADA STANDARDS. ARMAFLEX WITH TAPE IS NOT ACCEPTABLE IN LIEU OF INSULATION KIT.	LAVATORY - AMERICAN STANDARD (0355.012), KOHLER (K-2005), SLOAN (SS-3003), TOTO (LT307), ZURN (Z5364) LAVATORY TRIM - DELTA (590T0), AMERICAN STANDARD (775B.205/PK00.HAC), CHICAGO FAUCET (116.706.AB.1), HYDROTEK (H-2603C-LR), MOEN (8302), SPEAKMAN (S-8800), ZURN (Z6913-XL), AMTC (AEF-301) MIXING VALVE - MV-1, REFER TO PLUMBING MATERIAL LIST. INSULATION KIT - TRUEBRO (LAV-GUARD), BROCAR PRODUCTS (TRAP WRAP), MCGUIRE (PROWRAP), PLUMBEREX (PRO-EXTREME)
L-2	LAVATORY (ADA INSTITUTIONAL WALL MOUNT) ACCESSIBLE CORRECTIONS STYLE LAVATORY - WALL MOUNTED, 14 GAUGE TYPE 304 STAINLESS STEEL, SEAMLESS WELDED CONSTRUCTION, SATIN FINISH EXPOSED SURFACES, 18" RECTANGULAR BOWL, DECK MOUNTED SPOUT, PNEUMATICALLY OPERATED, METERING NON-HOLD OPEN PUSH BOTTON VALVE FOR BOTH HOT AND COLD, FRONT ACCCESS. FIXTURE SHALL BE ADA COMPLIANT. ACCESSORIES - QUARTER-TURN 3/8" CHROME PLATED HEAVY BRASS ANGLE SUPPLY LOOSE KEY STOPS, CHROME PLATED SOFT COPPER SUPPLY LINES, DRAIN AND OFFSET TAILPIECE, 1-1/4" 20 GAUGE CAST BRASS P-TRAP. MIXING VALVE - MV-1, REFER TO PLUMBING MATERIAL LIST. UNIT SHALL BE ASSE 1070 LISTED AND APPROVED. VALVE SHALL COMPLY WITH FEDERAL ACT S.3874.	LAVATORY - ACORN(1652FALRM-1-DMS-04-M-FMT) WILLOUBY, METACRAFT. MIXING VALVE - MV-1, REFER TO PLUMBING MATERIAL LIST.
LI-1	LINT INTERCEPTOR - SOLIDS INTERCEPTOR, POLYETHYLENE TANK, REMOVABLE CORROSION RESISTANT FILTER BASKET WITH 1/8" DIAMETER PERFORATIONS, INSTALLED BELOW GRADE, ADJUSTABLE RISER WITH WATER AND GAS TIGHT COVER, 16,000 LB LOAD RATED, 6" INLET AND OUTLET, MAXIMUM 150 GPM FLOW RATE, 104 GALLON LIQUID CAPACITY, 10 GALLONS SOLID CAPACITY.	STREIM AA-JK-6 OR APPROVED EQUAL
MB-1	MOP BASIN - 316 STAINLESS STEEL, 16 GAUGE, 24"x24"x10", STAINLESS STEEL DRAIN WITH GRID STRAINER, 2" OUTLET, VINYL BUMPER GUARD ON EXPOSED SIDES. TRIM - EXPOSED TWO HANDLE MIXING FAUCET, BRASS CONSTRUCTION, CHROME-PLATED FINISH, SINGLE WING HANDLES, 1/4 TURN CERAMIC DISC CARTRIDGE, 3/4" HOSE THREAD SPOUT WITH ASSE 1053 RATED INTEGRAL VACUUM BREAKER, WALL BRACE, PAIL HOOK, CHECK STOPS OR INLINE CHECK VALVES TO PREVENT THERMAL CROSSOVER. FAUCET SHALL COMPLY WITH FEDERAL ACT S.3874. ACCESSORIES - MOP HANGER, HOSE AND HOSE BRACKET, TRAP TWO 24" WIDE STAINLESS STEEL WALL GUARD	MOP BASIN - FRANKE COMMERCIAL (FSS222210/316-1) TRIM - DELTA (28C2383), AMERICAN STANDARD (8344.012), CHICAGO FAUCETS (897-CP), MOEN (8124), SPEAKMAN (SC-5812), SYMMONS (S-2490), ZURN (Z841M1-XL) VACUUM BREAKER - WATTS (8A), OR APPROVED EQUAL
MBT-1	MOP BASIN TRIM - EXPOSED TWO HANDLE MIXING FAUCET, BRASS CONSTRUCTION, CHROME-PLATED FINISH, SINGLE WING HANDLES, 1/4 TURN CERAMIC DISC CARTRIDGE, 3/4" HOSE THREAD SPOUT, ASSE 1053 RATED INTEGRAL VACUUM BREAKER, WALL BRACE, PAIL HOOK, CHECK STOPS OR INLINE CHECK VALVES TO PREVENT THERMAL CROSSOVER. FAUCET SHALL COMPLY WITH FEDERAL ACT S.3874. MOUNT AT 30" ABOVE FLOOR.	DELTA (28C2383), AMERICAN STANDARD (8344.012), CHICAGO FAUCETS (897-CP), MOEN (8124), SPEAKMAN (SC-5812), SYMMONS (S-2490), ZURN (Z841M1-XL) VACUUM BREAKER - WATTS (8A), OR APPROVED EQUAL
MV-1	MIXING VALVE - POINT-OF-USE ANTI-SCALD THERMOSTATIC MIXING VALVE FOR TEMPERED WATER CONTROL, ALL BRONZE/BRASS CONSTRUCTION, ROUGH FINISH, THREADED INLETS, TAMPER RESISTANT SETPOINT, 3/8" COMPRESSION INLETS AND OUTLETS, COLD WATER BYPASS IF USED WITH MIXING FAUCET. CABINET - SEMI-RECESSED 18 GAUGE STAINLESS STEEL CABINET WITH 16 GAUGE LOCKING DOOR TO ENCLOSE VALVE, INLET STOPS, OUTLET THERMOMETER, AND OUTLET VALVES. 0.5 GPM OUTPUT. UNIT TO MIX 140 DEGREE F HOT WATER SUPPLY AND 40 DEGREE F COLD WATER SUPPLY FOR 110 DEGREE F OUTLET. UNIT SHALL BE ASSE 1070 LISTED AND APPROVED. VALVE SHALL COMPLY WITH FEDERAL ACT S.3874.	WATTS (LFUSG-B), LEONARD (170D-LF), LAWLER (TMM-1070T), ACORN CONTROLS (ST70), APOLLO (34DLF), POWERS (LFE480), SLOAN (MIX-135-A), SYMMONS (8210CK), WILKINS (ZW3870XLT)
MV-2	MIXING VALVE - POINT-OF-USE ANTI-SCALD THERMOSTATIC MIXING VALVE ARRANGEMENT FOR TEMPERED WATER CONTROL, ALL BRONZE/BRASS CONSTRUCTION, ROUGH FINISH, UNION/THREADED INLETS WITH STRAINERS, COMBINATION CHECK STOPS OR SEPARATE SUPPLY CHECK VALVES AND SHUT OFF VALVES. CABINET - SEMI-RECESSED 18 GAUGE STAINLESS STEEL CABINET WITH 16 GAUGE LOCKING DOOR TO ENCLOSE VALVE, INLET STOPS, OUTLET THERMOMETER, AND OUTLET VALVES. RATED FOR 1.5 GPM OUTPUT MAXIMUM AT 5 PSI DIFFERENTIAL AND 0.5 GPM OUTPUT MINIMUM. UNIT TO MIX 140 DEGREE F HOT WATER SUPPLY AND 40 DEGREE F COLD WATER SUPPLY FOR 120 DEGREE F OUTLET. UNIT SHALL BE ASSE 1070 LISTED AND APPROVED. VALVE SHALL COMPLY WITH FEDERAL ACT S.3874.	LEONARD (170-LF/270-LF/370-LF), ACORN CONTROLS (ST7069), APOLLO (34BLF), BRADLEY (S59 SERIES), LAWLER (310/570), POWERS (SERIES LFLM495), SYMMONS (8210CK MAXLINE SERIES), WATTS (LFMMV), WILKINS (ZW1070XL)
MV-3	MIXING VALVE - POINT-OF-USE ANTI-SCALD THERMOSTATIC MIXING VALVE ARRANGEMENT FOR TEMPERED WATER CONTROL, ALL BRONZE/BRASS CONSTRUCTION, ROUGH FINISH, UNION/THREADED INLETS WITH STRAINERS, COMBINATION CHECK STOPS OR SEPARATE SUPPLY CHECK VALVES AND SHUT OFF VALVES. CABINET - SEMI-RECESSED 18 GAUGE STAINLESS STEEL CABINET WITH 16 GAUGE LOCKING DOOR TO ENCLOSE VALVE, INLET STOPS, OUTLET THERMOMETER, AND OUTLET VALVES. RATED FOR 2.2 GPM OUTPUT MAXIMUM AT 5 PSI DIFFERENTIAL AND 0.5 GPM OUTPUT MINIMUM. UNIT TO MIX 140 DEGREE F HOT WATER SUPPLY AND 40 DEGREE F COLD WATER SUPPLY FOR 110 DEGREE F OUTLET. CONFIRM OUTLET TEMPERATURE SETPOINT WITH FOOD SERVICE PLANS. UNIT SHALL BE ASSE 1070 LISTED AND APPROVED. VALVE SHALL COMPLY WITH FEDERAL ACT S.3874.	LEONARD (170-LF/270-LF/370-LF), ACORN CONTROLS (ST7069), APOLLO (34BLF), BRADLEY (S59 SERIES), LAWLER (310/570), POWERS (SERIES LFLM495), SYMMONS (8210CK MAXLINE SERIES), WATTS (LFMMV), WILKINS (ZW1070XL)
PRV-1	PRESSURE REGULATING VALVE - SELF CONTAINED TYPE UP TO 2" SIZE, DIAPHRAGM ACTUATED, LEAD FREE CAST COPPER-SILICON OR BRONZE BODY, STAINLESS STEEL SPRINGS, INTEGRAL REMOVABLE STAINLESS STEEL STRAINER SCREEN, STAINLESS STEEL TRIM AND SEATS FOR MAXIMUM OPERATING PRESSURE OF 300 PSIG GAUGE AND ADJUSTABLE FROM 25-75PSIG. NPT THREADED INLET/OUTLET ASSE 1003 LISTED. 75 PSIG INLET PRESSURE 60 PSIG OUTLET PRESSURE 2 GPM 1/2"ø VALVE	PRESSURE REGULATING VALVE - FISHER TYPE 95H, CASH ACME SERIES B, MASONEILAN 17 SERIES, TRERICE 921 OR 1002, WATTS LFU5B SERIES.
PRV-2	PRESSURE REGULATING VALVE - SELF CONTAINED TYPE UP TO 2" SIZE, DIAPHRAGM ACTUATED, LEAD FREE CAST COPPER-SILICON OR BRONZE BODY, STAINLESS STEEL SPRINGS, INTEGRAL REMOVABLE STAINLESS STEEL STRAINER SCREEN, STAINLESS STEEL TRIM AND SEATS FOR MAXIMUM OPERATING PRESSURE OF 300 PSIG GAUGE AND ADJUSTABLE FROM 25-75PSIG. NPT THREADED INLET/OUTLET ASSE 1003 LISTED. 75 PSIG INLET PRESSURE 40 PSIG OUTLET PRESSURE 8 GPM 3/4"ø OR 1" VALVE, TO MATCH ROUGH-IN SIZE.	PRESSURE REGULATING VALVE - FISHER TYPE 95H, CASH ACME SERIES B, MASONEILAN 17 SERIES, TRERICE 921 OR 1002, WATTS LFU5B SERIES.
RO-1	REVERSE OSMOSIS SYSTEM - 2.78 GPM PRODUCT FLOW AT 158 PSI, 5.57 GPM FEED FLOW, 2.79 GPM WASTE FLOW, 1.9 GPM RECIRCULATION FLOW, PRODUCT TDS 6.61 MG/L, WASTE TDS 970 MG/L. 2 HP, 208 VOLT, 3 PHASE, 60 HZ. THIS EQUIPMENT REQUIRES EMERGENCY POWER.	REFER TO SPECIFICATION 22 30 00 FOR ADDITIONAL INFORMATION

2/2/2024 3:02:27 PM

Farnsworth GROUP
14225 UNIVERSITY AVENUE, SUITE 110
WAUKEE, IOWA 50263
(515) 225-3469 / info@f-w.com
www.f-w.com
Engineers | Architects | Surveyors | Scientists

RIPPE ASSOCIATES
FOODSERVICE DESIGN + CONSULTING

kpff

IMEG

Bishop Engineering

ISSUE:

#	DATE:	DESCRIPTION:

BID SET

PROJECT:
STATE OF IOWA - DEPARTMENT OF CORRECTIONS

CLARINDA CORRECTIONAL FACILITY - KITCHEN & LAUNDRY ADDITION

2000 N 16TH ST, CLARINDA, IA 51632

DATE:	02/09/2024
DESIGNED:	MIKMCC
DRAWN:	MIKMCC
REVIEWED:	DELLLE

SHEET TITLE:
PLUMBING SCHEDULES

IMEG
2882 106TH STREET
DES MOINES, IA 50322
P: 515.334.9906 F: 515.334.9908
www.imegcorp.com

IMEG CORP. RESERVES PROPRIETARY RIGHTS, INCLUDING COPYRIGHTS, TO THIS DRAWING AND THE DATA SHOWN THEREON. SAID DRAWING AND/OR DATA ARE THE EXCLUSIVE PROPERTY OF IMEG CORP. AND SHALL NOT BE USED OR REPRODUCED FOR ANY OTHER PROJECT WITHOUT THE EXPRESS WRITTEN APPROVAL AND PARTICIPATION OF IMEG CORP. ©2024 IMEG CORP.

0 1 2 3
REF. SCALE IN INCHES
PROJECT #21007688.00

SHEET NUMBER:
P6.1

PROJECT NO.: 0240202.00
RFB922300-02

PLUMBING MATERIAL LIST CONTINUED

TAG NAME	DESCRIPTION	MANUFACTURER AND MODEL
SK-1	SINK - ACCESSIBLE, SELF-RIMMING SINGLE COMPARTMENT WITH FAUCET DECK [AND OVERFLOW], 18 GAUGE TYPE 304 STAINLESS STEEL, 31" (SIDE-TO-SIDE) x 21" (FRONT-TO-BACK) OVERALL SIZE, 28" x 16" x 6 3/8" DEEP BOWL, COMPLETELY UNDERCOATED, 3-1/2" DIAMETER DRAIN OUTLET LOCATION OFF-CENTERED REAR IN BOWL, PERFORATED TYPE 304 STAINLESS STEEL GRID STRAINER. SINK TRIM - SINGLE HANDLE MIXING FAUCET, BRASS CONSTRUCTION, CHROME-PLATED FINISH, CONVENTIONAL SWING SPOUT, NOMINAL 8" REACH, AERATOR, LEVER HANDLE, SUPPLIES AT 8" CENTERS. MAXIMUM FLOW TO BE 2.2 GPM IN COMPLIANCE WITH ENERGY POLICY ACT OF 2005 AND ASME/ANSI STANDARD A112.18.1M. FAUCET SHALL COMPLY WITH FEDERAL ACT S.3874. PROVIDE RESTRICTIVE DEVICE AND ESCUTCHEON PLATE AS REQUIRED. ACCESSORIES - OFFSET 1-1/2" 17 GAUGE CHROME-PLATED BRASS TAILPIECE AND P-TRAP, QUARTER-TURN BALL VALVE TYPE 3/8" CHROME-PLATED BRASS ANGLE SUPPLIES WITH LOOSE KEY STOPS, CHROME-PLATED SOFT COPPER SUPPLY LINES. INSULATION KIT - PRE-MANUFACTURED FOR P-TRAP, STOP VALVES, AND SUPPLY LINES.	SINK - ELKAY ([LRAD], JUST (SL-ADAJ-ADA-35), FRANKE (ALBS) SINK TRIM - DELTA (100LF-HDF), AMERICAN STANDARD (4175.500), CHICAGO FAUCET (431-ABCP), ELKAY (LK1000CR), KOHLER (K-15171), MOEN (67425), SPEAKMAN (S-3762), SYMMONS (S-23) INSULATION KIT - MCGUIRE (PROWRAP), JUST (J-ADA), PLUMBEREX (PRO-EXTREME), TRUEBRO (LAV-GUARD2)
T-1	STORAGE TANK - VERTICAL CEMENT-LINED, HEAVY GAUGE STEEL JACKET, BAKED ENAMEL FINISH, 250 GALLON CAPACITY, 30" DIAMETER x 87" HIGH, MAGNESIUM ANODE ROD(S), FIBERGLASS OR FOAM INSULATION TO MEET LATEST ASHRAE/IES 90.1B STANDARD, 4" INLET/OUTLET, DRAIN AND RELIEF VALVE OPENINGS, ASME T&P RELIEF VALVE, 4"x6" HANDHOLES ON TANKS UP TO 30" IN DIAMETER, 11"x15" MANWAY ON TANKS 30" IN DIAMETER AND LARGER, STRUCTURAL SUPPORTS AS REQUIRED FOR INSTALLATION, 125 PSIG WORKING PRESSURE, ASME STAMPED, 5-YEAR WARRANTY.	A.O. SMITH (HD SERIES), BOCK (ST SERIES), AJAX BOILER (ACE SERIES), STATE (PVG SERIES), LOCHINVAR (RG/RC SERIES), CEMLINE (JST SERIES), RECO USA
T-2	RO PRESSURIZED STORAGE TANK - VERTICAL, COPOLYMER POLYPROPYLENE TANK REINFORCED WITH FIBERGLASS AND WITH SEALED EXPOXY RESING. WATER CHAMBER WITH 100% BUTYL RUBBER DIAPHRAGM WITH COPOLYMER POLYPROPYLENE LOWER CHAMBER, 125 PSI MAX WORKING PRESSURE, 120°F MAXIMUM WORKING TEMPERATURE, PRE-CHARGED TO 20 PSI (ADJ.). 120 GALLONS WITH 79.6 GALLONS OF DRAWDOWN WITH 10 PSI PRE-CHARGE AND 60 PSI SUPPLY.	FLEXWAVE (FWRO 120) OR ENGINEER PREAPPROVED EQUAL
TD-1	TRENCH DRAIN - PRE-MANUFACTURED POLYSTYRENE TRENCH FORMING SYSTEM, 12" WIDE, 8 FOOT SECTIONS PRE-SLOPED AT 1/8" PER FOOT, ROUNDED BOTTOM, INTEGRAL DEFORMING GROVES, STEEL SUPPORT RAILS AND ANCHORING STUDS, HEAVY DUTY CAST IRON GRATE, H-20 RATED, INTEGRAL CATCH BASIN. TRENCH DRAIN SHALL BE 9'-0" LONG WITH CENTER CATCH BASIN AND 6" BOTTOM OUTLET. DEPTH AT SHALLOW END SHALL BE OF TRENCH SHALL BE 12".	ABT (TF-14) OR APPROVED EQUAL
TD-2	TRENCH DRAIN - PRE-MANUFACTURED POLYSTYRENE TRENCH FORMING SYSTEM, 12" WIDE, 8 FOOT SECTIONS PRE-SLOPED AT 1/8" PER FOOT, ROUNDED BOTTOM, INTEGRAL DEFORMING GROVES, STEEL SUPPORT RAILS AND ANCHORING STUDS, HEAVY DUTY CAST IRON GRATE, H-20 RATED, INTEGRAL CATCH BASIN. TRENCH DRAIN SHALL BE 21'-0" LONG WITH CENTER CATCH BASIN AND 6" BOTTOM OUTLET. DEPTH AT SHALLOW END SHALL BE OF TRENCH SHALL BE 12".	ABT (TF-14) OR APPROVED EQUAL
WC-1	WATER CLOSET - ACCESSIBLE, WALL MOUNTED, FLUSH VALVE TYPE, WHITE VITREOUS CHINA, SIPHON JET, WATER SAVING, ELONGATED BOWL, 1-1/2" TOP SPUD. FLUSH VALVE - EXPOSED, WALL MOUNTED SENSOR OPERATION, HARD WIRED, 1.6 GALLONS PER FLUSH, 11-1/2" ROUGH-IN, CHROME PLATED, 1" I.P.S. SCREWDRIVER STOP-CHECK VALVE WITH VANDAL RESISTANT CAP, HIGH BACK PRESSURE VACUUM BREAKER, ADJUSTABLE TAILPIECE, SPUD COUPLING AND FLANGE. WALL FLANGE WITH SET SCREW, MECHANICAL OVER-RIDE BUTTON, CHLORAMINE RESISTANT MATERIALS, CHROME PLATED COVER PLATE WITH TAMPER-PROOF SCREWS, TRANSFORMER AND LOW VOLTAGE WIRING, ADA COMPLIANT, 3 YEAR WARRANTY. ELECTRICAL REQUIREMENTS - 120VAC INPUT SEAT - WHITE, EXTRA HEAVY, OPEN FRONT, INJECTION MOLDED SOLID ANTI-MICROBIAL PLASTIC, SELF-SUSTAINING HINGE, STAINLESS STEEL OR PLATED STEEL POSTS AND NUTS. CONTRACTOR OPTION: COMBINATION WATER CLOSET/FLUSH VALVE PACKAGED SYSTEM BY AMERICAN STANDARD, KOHLER, SLOAN, OR ZURN ACCESSORIES - WATER CLOSET SUPPORT CARRIER RATED FOR 500 LBS. MOUNT WATER CLOSET WITH CARRIER BOLTED SECURELY TO FLOOR. TOP OF SEAT SHALL BE AT 17"-19" ABOVE FINISHED FLOOR (VERIFY EXACT MOUNTING HEIGHT WITH MANUFACTURER). VERIFY EQUIPMENT REQUIREMENTS AND ROUGH-IN LOCATIONS.	WATER CLOSET - AMERICAN STANDARD (2257.101), GERBER (25-030), KOHLER (K-84325), SLOAN (ST-2053), TOTO (CT708), ZURN (Z5610) FLUSH VALVE - ZURN (ZEMS6000AV), SLOAN (111 ES-S), AMERICAN STANDARD (6067.161), DELANY (1302), HYDROTEK (H-8000C), MOEN (8310AC16), AMTC (AEF-801-HWCT-16) SEAT - BEMIS (3155SSCT), CHURCH (3155C), BENEKE (533PC), OLSONITE (95), SAME AS WATER CLOSET MANUFACTURER
WC-2	WATER CLOSET - ACCESSIBLE, OFF FLOOR, WALL MOUNTED, WALL OUTLET, WALL SUPPLY, 14 GAUGE STAINLESS STEEL, SEAMLESS WELDED CONSTRUCTION, SATIN FINISHED EXPOSED SURFACES, BLOWOUT TYPE, ELONGATED BOWL WITH SELF-DRAINING FLUSHING RIM, INTEGRAL CONTOURED SEAT. INSTALLED ON FINISHED WALL FROM THE FRONT. WALL CONCEALED SUPPLY WITH 1.6 GPF FLUSH. ACCESSORIES - WATER CLOSET SUPPORT CARRIER RATED FOR 500 LBS. FLUSH VALVE - CONCEALED IN ACEESS PANEL SENSOR OPERATION, HARD WIRED, 1.6 GALLONS PER FLUSH, 11-1/2" ROUGH-IN, CHROME PLATED, 1" I.P.S. SCREWDRIVER STOP-CHECK VALVE WITH VANDAL RESISTANT CAP, HIGH BACK PRESSURE VACUUM BREAKER, ADJUSTABLE TAILPIECE, SPUD COUPLING AND FLANGE. WALL FLANGE WITH SET SCREW, MECHANICAL OVER-RIDE BUTTON, CHLORAMINE RESISTANT MATERIALS, CHROME PLATED COVER PLATE WITH TAMPER-PROOF SCREWS, TRANSFORMER AND LOW VOLTAGE WIRING, ADA COMPLIANT, 3 YEAR WARRANTY. ACCESS PANLE SHALL BE 14 GAUGE STAINLESS STEEL WITH SATIN FINISH, 18 GAUGE STAINLESS STEEL RECESSED WALL BOX WITH VANDAL RESISTANT SCREWS. ELECTRICAL REQUIREMENTS - 120VAC INPUT	WATER CLOSET - ACORN 2100-W-1-1.6GPF-FVBO-ADA, WILLOUGHBY, METCRAFT FLUSH VALVE - ZURN (ZEMS6000AV), SLOAN (111 ES-S), AMERICAN STANDARD (6067.161), DELANY (1302), HYDROTEK (H-8000C), MOEN (8310AC16), AMTC (AEF-801-HWCT-16)
WCO-1	WALL CLEANOUT - END CAP, CAST IRON ACCESS BODY, GAS AND WATERTIGHT BRONZE OR BRASS THREADED PLUG, ROUND STAINLESS STEEL ACCESS COVER, EXTENDED MACHINE SCREW.	ZURN (Z-1441), SMITH (4422), WADE (W-8480-R/8550), JOSAM (58600-CO), WATTS (CO-380-RD), MIFAB (C1450-RD)
WH-4	WATER HEATER - GAS FIRED, CONDENSING, VERTICAL, MINIMUM 92% EFFICIENT, SEALED COMBUSTION, MINIMUM 10:1 MODULATING HEAT OUTPUT, METAL CABINET, BAKED ENAMEL FINISH, 160 PSI WORKING PRESSURE, FIBERGLASS OR FOAM INSULATION, BRASS WATER CONNECTIONS AND DRAIN VALVE, ASME APPROVED T&P RELIEF VALVE, AUTOMATIC WATER THERMOSTAT, BUILT-IN GAS REGULATING VALVE, ADJUSTABLE TEMPERATURE RANGE, 5-YEAR WARRANTY, UL LISTED, COMPLIANT TO NAECA, ASHRAE 90.1 AND ASHRAE 90A. 1572 GPH AT 100°F TEMPERATURE RISE HEATING CAPACITY, 19 GALLON STORAGE CAPACITY, 1,350,000 BTUH INPUT NATURAL GAS. ELECTRICAL REQUIREMENTS - 120V CIRCUIT, 20 AMPS, FOR BLOWER, CIRCULATING PUMP AND CONTROLS, HARD-WIRED. THIS EQUIPMENT REQUIRES EMERGENCY POWER. SET WATER TEMPERATURE AT 140°F. SET SUPPLY GAS PRESSURE AT 10" W.C. PROVIDE INTEGRATED WATER HEATER MANAGEMENT SYSTEM TO CONTROL SEQUENCING OF BOTH WATER HEATERS. PROVIDE SEQUENCING VALVES. CONDENSATE DRAIN NEUTRALIZATION TANK - RATED FOR MAXIMUM 6,000 MBH WATER HEATER AND 45 GPH CONDENSATE FLOW, POLYPROPYLENE RECTANGULAR TANK, 1"FNPT INLET AND OUTLET, REMOVABLE ACCESS COVER FOR CLEANING AND PELLET REPLACEMENT, 25 LBS PH NEUTRALIZING PELLETS. REFER TO FLOOR PLANS FOR EXISTING ELEVATOR DOOR SIZE AND CAB SIZE. MAXIMUM WATER HEATER DIMENSIONS SHALL ALLOW FOR INSTALLATION BY MOVING THROUGH BUILDING AND EXISTING ELEVATOR TO SECOND FLOOR MECHANICAL ROOM. INCLUDE COMPLETE GAS TRAIN INCLUDING GAS SAFETY SHUTOFF VALVE CONFORMING TO CSD-1 REQUIREMENTS. VENT ALL GAS VALVES TO OUTDOORS SEPERATELY.	AERCO (INN 1350N), INTELLIHOT (IQ1501), LOCHINVAR (AWH1500NPM) NEUTRALIZATION TANK - JJM BOILER WORKS (NB-6), NUTRASAFE (CN6T)

PLUMBING MATERIAL LIST CONTINUED

TAG NAME	DESCRIPTION	MANUFACTURER AND MODEL
WH-5	WATER HEATER - GAS FIRED, CONDENSING, VERTICAL, MINIMUM 92% EFFICIENT, SEALED COMBUSTION, MINIMUM 10:1 MODULATING HEAT OUTPUT, METAL CABINET, BAKED ENAMEL FINISH, 160 PSI WORKING PRESSURE, FIBERGLASS OR FOAM INSULATION, BRASS WATER CONNECTIONS AND DRAIN VALVE, ASME APPROVED T&P RELIEF VALVE, AUTOMATIC WATER THERMOSTAT, BUILT-IN GAS REGULATING VALVE, ADJUSTABLE TEMPERATURE RANGE, 5-YEAR WARRANTY, UL LISTED, COMPLIANT TO NAECA, ASHRAE 90.1 AND ASHRAE 90A. 1572 GPH AT 100°F TEMPERATURE RISE HEATING CAPACITY, 19 GALLON STORAGE CAPACITY, 1,350,000 BTUH INPUT NATURAL GAS. ELECTRICAL REQUIREMENTS - 120V CIRCUIT, 20 AMPS, FOR BLOWER, CIRCULATING PUMP AND CONTROLS, HARD-WIRED. THIS EQUIPMENT REQUIRES EMERGENCY POWER. SET WATER TEMPERATURE AT 140°F. SET SUPPLY GAS PRESSURE AT 10" W.C. PROVIDE INTEGRATED WATER HEATER MANAGEMENT SYSTEM TO CONTROL SEQUENCING OF BOTH WATER HEATERS. PROVIDE SEQUENCING VALVES. CONDENSATE DRAIN NEUTRALIZATION TANK - RATED FOR MAXIMUM 6,000 MBH WATER HEATER AND 45 GPH CONDENSATE FLOW, POLYPROPYLENE RECTANGULAR TANK, 1"FNPT INLET AND OUTLET, REMOVABLE ACCESS COVER FOR CLEANING AND PELLET REPLACEMENT, 25 LBS PH NEUTRALIZING PELLETS. REFER TO FLOOR PLANS FOR EXISTING ELEVATOR DOOR SIZE AND CAB SIZE. MAXIMUM WATER HEATER DIMENSIONS SHALL ALLOW FOR INSTALLATION BY MOVING THROUGH BUILDING AND EXISTING ELEVATOR TO SECOND FLOOR MECHANICAL ROOM. INCLUDE COMPLETE GAS TRAIN INCLUDING GAS SAFETY SHUTOFF VALVE CONFORMING TO CSD-1 REQUIREMENTS. VENT ALL GAS VALVES TO OUTDOORS SEPERATELY.	AERCO (INN 1350N), INTELLIHOT (IQ1501), LOCHINVAR (AWH1500NPM) NEUTRALIZATION TANK - JJM BOILER WORKS (NB-6), NUTRASAFE (CN6T)
WHA-1	WATER HAMMER ARRESTOR - BELLOWS TYPE, PRE-CHARGED, ALL LEAD FREE STAINLESS STEEL CONSTRUCTION, ASSE 1010 APPROVED, PDI CERTIFIED, RATED FOR [1-11][12-32][33-60][61-113][114-154][155-300] FIXTURE UNITS. REFER TO DETAIL 2/P4.1 FOR WATER HAMMER ARRESTOR LOCATION AND SIZING INFORMATION. INSTALL PER MANUFACTURER'S RECOMMENDATIONS.	ZURN (Z1700), JR SMITH (5005-5050), WADE (W5-100), JOSAM (75000 SERIES), WATTS (SS), MIFAB (WHB)
WHA-2	WATER HAMMER ARRESTOR - BELLOWS TYPE, PRE-CHARGED, ALL LEAD FREE STAINLESS STEEL CONSTRUCTION, ASSE 1010 APPROVED, PDI CERTIFIED, RATED FOR 155-300 FIXTURE UNITS. INSTALL PER MANUFACTURER'S RECOMMENDATIONS.	ZURN (Z1700), JR SMITH (5005-5050), WADE (W5-100), JOSAM (75000 SERIES), WATTS (SS), MIFAB (WHB)
WMF-1	WASHING MACHINE FIXTURE - STAINLESS STEEL ENCLOSURE, 2" CENTER DRAIN, INLET STRAINER, SCREEN OR SEDIMENT BASKET, TWO INDEXED 1/2" DOMESTIC VALVES WITH THREADED OUTLETS, INTEGRAL WATER HAMMER ARRESTORS.	GUY GRAY (SSWB3 SERIES)
WS-3	WATER SOFTENER - TRIPLEX SOFTENER TANKS, AUTOMATIC REGENERATION TYPE BASED ON MULTIPLE TANK PROGRESSIVE CONTROL SYSTEM, BRINE RECLAIMATION SYSTEM, POWER SUPPLY WITH CORD AND PLUG. SYSTEM DESIGN FLOW OF 150 GPM. EACH UNIT SHALL HAVE: CONTINOUS FLOW RATE OF 152 GPM AT 15 PSI LOSS MAXIMUM FLOW RATE OF 210 GPM AT 25 PSI LOSS DESIGN FLOW RATE OF 50 GPM AT 1.42 PSI LOSS. MINIMUM FLOW RATE OF 10 GPM TO AVOID CHANNELING MINIMUM CAPACITY OF 200,000 GRAINS PER TANK SALT DOSAGE OF 10 LBS PER CUBIC FOOT OF RESIN SOFTENER TANK SIZE: 30"X60" (QTY. 3) BRINE TANK SIZE: 30"X50" (QTY. 1) ELECTRICAL REQUIREMENTS - PROVIDE ONE 120V-1 PHASE RECEPTACLE PER CONTROL VALVE. THIS EQUIPMENT REQUIRES EMERGENCY POWER. REFER TO SPECIFICATIONS FOR ADDITIONAL REQUIREMENTS.	REFER TO SPECIFICATIONS BASIS OF DESIGN: CULLIGAN CSM-300-3

PRESSURE BOOSTER SYSTEM SCHEDULE

NOTES:
1.PROVIDE SHAFT GROUNDING AS REQUIRED IN THE MOTOR SPECIFICATION 22 05 13.
2.HP NOTED IS FOR EACH PUMP. SKID HAS A TOTAL OF THREE PUMPS.
3.GPM LISTED IS TOTAL DESIGN FLOW. FLOW OF EACH PUMP SHALL BE 50 GPM.
4.COORDINATE WIDTH OF BOOSTER PACKAGE TO ALLOW FOR MOVEMENT THROUGH BUIDING THROUGH 36" WIDE DOORS. PIPE MANIFOLD MAY NEED TO BE REMOVED WHILE BRING INTO BUILDING.

								ELECTRICAL (NOTE 1)											
												DISCONNECT							
TAG NAME	AREA SERVED	CONFIGURATION	INLET PRESSURE PSI	OUTLET PRESSURE PSI	GPM (NOTE 3)	MINIMUM HYDROPNEUMATIC TANK SIZE	HP (NOTE 2)	RPM	VOLTAGE	PHASES	BY (NOTE A)	TYPE (NOTE B)	CONTROLLER/ STARTER BY (NOTE A)	SCCR (AMPS)	THIS REQUIRES EMERGENCY POWER	MANUFACTURER	MODEL	NOTES
PB-1	KITCHEN/LAUNDRY	TRIPLEX	50	90	150	132	3	1800	480	3	MFR.	NF	MFR.	5000	Yes	BELL & GOSSET	V3VFD6F80B1CK	NOTE 4

PIPE INSULATION SCHEDULE (PLUMBING)

GENERAL NOTES:
1. REFER TO THE SPECIFICATIONS FOR TYPE DESCRIPTIONS AND JACKETING REQUIREMENTS. VALUES LISTED BELOW ARE BASED ON ASHRAE / IECC REQUIREMENTS.
2. TYPE A INSULATION IS NOT ALLOWED IN NON-AIR CONDITIONED SPACES, SUCH AS MECHANICAL ROOMS, EXTERIOR, ATTICS, ETC.
3. TYPE B INSULATION GREATER THAN 1" THICK SHALL BE INSTALLED USING MULTIPLE LAYERS OF 3/4" OR 1" WITH STAGGERED SEAMS.
4. TYPE E IS NOT ALLOWED IN RETURN AIR PLENUMS, UNLESS LISTED AND LABELED AS 25/50 RATED PER ASTM E84/UL723.
5. PROVIDE RIGID INSERT AT HANGERS, EITHER PRE-MANUFACTURED COUPLINGS (REFER TO PIPE HANGER AND SUPPORTS SPECIFICATIONS) OR TYPE C, D, OR E INSULATION. SEE SPEC. FOR MORE DETAILS.

PIPE SYSTEM	INSULATION TYPE AND THICKNESS PER NOMINAL PIPE OR TUBE SIZE				INSULATION TYPE AND THICKNESS PER NOMINAL PIPE OR TUBE SIZE (DIRECT BURIED)			NOTES
	< 1"	1" TO < 1.5"	1.5" TO < 4"	4" TO < 8"	< 1"	1" TO < 1.5"	1.5" TO < 4"	
CW - COLD WATER - POTABLE	A 0.5", B 0.5", E 0.5"	A 0.5", B 0.5", E 0.5"	A 1", B 1", E 1"	A 1", B 1", E 1"				
D - DRAIN - PLUMBING	A 0.5", B 0.5", E 0.5"	A 0.5", B 0.5", E 0.5"	A 1", B 1", E 1"	A 1", B 1", E 1"				APPLY INSULATION ONLY TO LOW TEMP DRAINS (55 DEG AND LOWER IE: COOLING COIL CONDENSATE, ICE MACHINE DRAINS, ETC.)
GV - GREASE VENT	A 0.5", B 0.5", E 0.5"	A 0.5", B 0.5", E 0.5"	A 1", B 1", E 1"	A 1", B 1", E 1"				APPLY INSULATION ONLY WITHIN 10' OF EXTERIOR PENETRATION
HWC - HOT WATER CIRCULATING - POTABLE	A 1", B 1", E 1"	A 1", B 1", E 1"	A 1.5", E 1"	A 1.5", E 1"	C 1", E 1"	C 1", E 1"	C 1", E 1"	
MISC RELIEF VENTS, INTAKES, AND DISCHARGES	A 0.5", B 0.5", E 0.5"	A 0.5", B 0.5", E 0.5"	A 1", B 1", E 1"	A 1", B 1", E 1"				APPLY INSULATION ONLY WITHIN 10' OF EXTERIOR PENETRATION ON COMPRESSOR INTAKES, VACUUM DISCHARGES, VENT/RELIEF LINES, ETC.
NCW - NON-POTABLE COLD WATER	A 0.5", B 0.5", E 0.5"	A 0.5", B 0.5", E 0.5"	A 1", B 1", E 1"	A 1", B 1", E 1"				
NHW - NON-POTABLE HOT WATER	A 1", B 1", E 1"	A 1", B 1", E 1"	A 1.5", E 1"	A 1.5", E 1"	C 1", E 1"	C 1", E 1"	C 1", E 1"	
RO - REVERSE OSMOSIS	A 0.5", B 0.5", E 0.5"	A 0.5", B 0.5", E 0.5"	A 1", B 1", E 1"	A 1", B 1", E 1"				
SAN - SANITARY DRAINAGE	A 0.5", B 0.5", E 0.5"	A 0.5", B 0.5", E 0.5"	A 1", B 1", E 1"	A 1", B 1", E 1"				APPLY INSULATION ONLY TO FLOOR DRAIN BODY, P-TRAP AND 10' DOWNSTREAM AT LOW TEMP DRAIN DISCHARGE (55 DEG AND LOWER IE: COOLING COIL CONDENSATE, ICE MACHINE DRAINS, ETC.)
SCW - SOFT COLD WATER	A 0.5", B 0.5", E 0.5"	A 0.5", B 0.5", E 0.5"	A 1", B 1", E 1"	A 1", B 1", E 1"				
SHW - SOFT HOT WATER	A 1", B 1", E 1"	A 1", B 1", E 1"	A 1.5", E 1"	A 1.5", E 1"	C 1", E 1"	C 1", E 1"	C 1", E 1"	
V - VENT	A 0.5", B 0.5", E 0.5"	A 0.5", B 0.5", E 0.5"	A 1", B 1", E 1"	A 1", B 1", E 1"				APPLY INSULATION ONLY WITHIN 10' OF EXTERIOR PENETRATION

AIR COMPRESSOR SCHEDULE

NOTES:
1. FURNISH WITH NO LOSS AUTOMATIC CONDENSATE DRAIN.

					ELECTRICAL								MAX. DIMENSIONS					
									DISCONNECT		CONTROLLER/ STARTER							
TAG NAME	AREA SERVED	CONFIGURATION	CAP. SCFM AT 100 PSI	RECEIVER CAPACITY (GAL.)	HP EACH	NO. OF POWER CONNECTIONS	VOLTAGE	PHASES	BY (NOTE A)	TYPE (NOTE B)	BY (NOTE A)	TYPE (NOTE C)	LENGTH	WIDTH	HEIGHT	MANUFACTURER	MODEL	NOTES
AC-1	LAUNDRY	SIMPLEX	3.3	30	1	1	120	1	MFR	NF	MFR	FV	42	16	37	QUINCY	QR-25 F210	NOTE 1

Farnsworth GROUP
14225 UNIVERSITY AVENUE, SUITE 110
WALKEE, IOWA 50263
(515) 225-3469 / info@f-w.com
www.f-w.com
Engineers | Architects | Surveyors | Scientists

RIPPE ASSOCIATES
FOODSERVICE DESIGN + CONSULTING

kpff

IMEG

Bishop Engineering

ISSUE:
DATE: DESCRIPTION:

BID SET

PROJECT:
STATE OF IOWA - DEPARTMENT OF CORRECTIONS

CLARINDA CORRECTIONAL FACILITY - KITCHEN & LAUNDRY ADDITION

2000 N 16TH ST, CLARINDA, IA 51632

DATE: 02/09/2024
DESIGNED: MIKMCC
DRAWN: MIKMCC
REVIEWED: DELLLE

SHEET TITLE:
PLUMBING SCHEDULES

SHEET NUMBER:
P6.2

PROJECT NO.: 0240202.00
RFB922300-02

IMEG
2882 106TH STREET
DES MOINES, IA 50322
P: 515.334.9906 F: 515.334.9908
www.imegcorp.com

IMEG CORP. RESERVES PROPRIETARY RIGHTS, INCLUDING COPYRIGHTS, TO THIS DRAWING AND THE DATA SHOWN THEREON. SAID DRAWING AND/OR DATA ARE THE EXCLUSIVE PROPERTY OF IMEG CORP. AND SHALL NOT BE USED OR REPRODUCED FOR ANY OTHER PROJECT WITHOUT THE EXPRESS WRITTEN APPROVAL AND PARTICIPATION OF IMEG CORP. ©2024 IMEG CORP.

0 1 2 3
REF. SCALE IN INCHES
PROJECT #21007688.00

2/2/2024 3:02:31 PM